H2M architects + engineers

CONTRACT AND SPECIFICATIONS

RIVERHEAD SEWER DISTRICT
TOWN OF RIVERHEAD
SUFFOLK COUNTY, NEW YORK

841 OLD COUNTRY ROAD
SEWER MAIN & EASEMENT RELOCATION

Project No: RDSD 18-01

TOWN SUPERVISOR
Laura Jens-Smith

TOWN BOARD
Jodi Giglio
Tim Hubbard
Catherine Kent
James Wooten

TOWN CLERK
Diane M. Wilhelm

SEWER DISTRICT SUPERINTENDENT
Michael P. Reichel

ASSISTANT SUPERINTENDENT
Timothy Allen

JULY 2018

STATE OF NEW YORK
STEVEN G. HEAD
No. 52108
LICENSED PROFESSIONAL ENGINEER

H2M architects + engineers

538 Broad Hollow Rd, 4th Floor East, Melville, NY 11747

tel 631.756.8000 fax 631.694.4122

www.h2m.com

TOWN OF RIVERHEAD / RIVERHEAD SEWER DISTRICT

841 OLD COUNTRY ROAD SEWER MAIN & EASEMENT RELOCATION

CONTRACT NO. RDSD 18-01

FRONT END DOCUMENTS

INDEX	I –3 PAGES
NOTICE TO BIDDERS	NB – 1 PAGE
INFORMATION FOR BIDDERS	IB – 20 PAGES
PROPOSAL	P-A TO P-D
QUALIFICATIONS OF BIDDER	QB – 4 PAGES
UNIFORM CONTRACTING QUESTIONNAIRE	10 PAGES
LIST OF SUBCONTRACTORS	SCL – 3 PAGES
CONDITIONS OF CONTRACT	CC – 18 PAGES
GENERAL CONDITIONS	GC – 15 PAGES
INDEMNITY, LIMITATION OF LIABILITY	ILL – 1 PAGE
CONTRACT	FC – 4 PAGES

TECHNICAL SPECIFICATIONS

DIVISION 1 – GENERAL REQUIREMENTS

011100	SUMMARY OF WORK
011400	WORK RESTRICTIONS
011419	SITE UTILIZATION PLAN
012100	ALLOWANCES
012500	PRODUCT SUBSTITUTION PROCEDURES
012973	SCHEDULE OF VALUES
013100	PROJECT MANAGEMENT AND COORDINATION
013223	SURVEYING
013233	CONSTRUCTION PHOTOGRAPHS
013300	SUBMITTALS
014100	REGULATORY REQUIREMENTS
014223	SPECIFICATION FORMAT
014320	PRE-INSTALLATION MEETINGS
014500	QUALITY CONTROL
014536	ENVIRONMENTAL QUALITY CONTROL
015000	TEMPORARY FACILITIES AND CONTROLS
015120	TEMPORARY SANITARY WASTEWATER CONVEYANCE
015526	MAINTENANCE AND PROTECTION OF TRAFFIC
015719	TEMPORARY ENVIRONMENTAL CONTROLS
016100	BASIC PRODUCT REQUIREMENTS
016500	PRODUCT DELIVERY, STORAGE AND HANDLING
017423	CLEANING
017550	PROCESS PIPE AND TANK TESTING
017800	CLOSEOUT SUBMITTALS
017839	PROJECT RECORD DOCUMENTS

DIVISION 02 – EXISTING CONDITIONS

023000	SUBSURFACE INVESTIGATION
024116	STRUCTURE DEMOLITION

DIVISION 03-30

NOT USED

DIVISION 31 – EARTHWORK

312316	EXCAVATION
312316.13	TRENCHING AND BACKFILLING
312323	FILL
315000	EXCAVATION SUPPORT AND PROTECTION

DIVISION 32 – EXTERIOR IMPROVEMENTS

NOT USED

DIV 33 – UTILITIES

333100 SANITARY UTILITY SEWERAGE PIPING

DIVISION 34-49

NOT USED

END OF INDEX

The Town Board of Riverhead will receive bids for the following contract:

841 OLD COUNTRY ROAD SEWER MAIN & EASEMENT RELOCATION

CONTRACT NO. RDSD 18-01

for the Riverhead Sewer District at the Town Clerk's office, Town Hall, 200 Howell Avenue, Riverhead, New York 11901, at 11:00 AM prevailing time, on **Tuesday, August 14, 2018** at which time and place the bids will be publicly opened and read.

Plans and specifications will only be available online on or after **Thursday, July 26, 2018** by visiting the Town of Riverhead website: townofriverheadny.gov and click on “Bid Requests”.

Each proposal must be accompanied by a bid bond in the amount of five percent (5%) of the total bid, or a certified check made payable to the TOWN OF RIVERHEAD as assurance that the bid is made in good faith.

The right is reserved to reject any or all bids, to waive any informalities, and to accept the lowest responsible bid.

BY ORDER OF THE TOWN BOARD
TOWN OF RIVERHEAD
SUFFOLK COUNTY, NEW YORK

ACTING AS THE GOVERNING BODY
OF THE RIVERHEAD SEWER DISTRICT

DIANE WILHELM, TOWN CLERK

INDEX

1. RECEIPT AND OPENING OF BIDS.
2. PLAN DEPOSITS
3. PLANS AND SPECIFICATIONS
4. VERBAL ANSWERS
5. EXAMINATION OF SITE
6. FORM, PREPARATION AND PRESENTATION OF PROPOSAL.
7. BID SECURITY.
8. QUALIFICATIONS OF BIDDERS.
9. REJECTION OF BIDS.
10. WITHDRAWAL OF BID.
11. BIDDER'S RESPONSIBILITY.
12. SIGNATURE OF CONTRACTOR
13. CONSTRUCTION TERMS AND CONDITIONS.
14. SECURITY FOR FAITHFUL PERFORMANCE AND MAINTENANCE
15. FOREIGN CONTRACTORS.
16. LIEN LAW.
17. SUBCONTRACTORS AND SUPPLIERS.
18. PENAL LAW.
19. REFUSAL TO WAIVE IMMUNITY.
20. ADDENDA AND INTERPRETATIONS.
21. LIQUIDATED DAMAGES.
22. EXEMPTION FROM SALES AND USE TAXES.
23. METHOD OF AWARD.
24. TIME FOR COMMENCEMENT OF WORK.
25. PAYMENT.
26. NYS LABOR LAW.
27. NYS WAGE RATES.
28. FEDERAL LABOR LAW
29. FEDERAL WAGE RATES
30. INSURANCE REQUIRED BY THE TOWN OF RIVERHEAD.
31. TERM OF CONTRACT.
32. CERTIFIED PAYROLLS
33. NO LIEN AFFIDAVIT FORM 220 AND TOWN OF RIVERHEAD WAGE DISCLAIMER

1. RECEIPT AND OPENING OF BIDS

Pursuant to Town Board Resolution, the Town of Riverhead invites bids on the forms herein provided for the 841 OLD COUNTRY ROAD SEWER MAIN & EASEMENT RELOCATION, CONTRACT RDSD 18-01: SEWER CONSTRUCTION, 200 Howell Avenue, Riverhead, New York, time, date and place indicated in the Notice to Bidders.

2. PLAN DEPOSITS

There is no deposit for the plans and specifications that are only available online by visiting the Town of Riverhead website.

3. PLANS AND SPECIFICATIONS

Complete sets of Plans and Specifications for the inspection of prospective bidders will be found on file with the Town Clerk, Town of Riverhead, Town Hall, 200 Howell Avenue, Riverhead, New York, and at the office of H2M architects + engineers, 538 Broad Hollow Road, 4th Floor East, Melville, New York, 11747.

All contractors must leave their names, telephone numbers, fax numbers, and correct mailing addresses upon receipt of the Plans and Specifications.

4. VERBAL ANSWERS

The Town Board, its agents, servants or employees, or the Engineer, will not be responsible in any manner for verbal answers to any inquiries regarding the meaning of the Contract Drawings or Specifications given prior to the awarding of the contract.

5. EXAMINATION OF SITE

Bidders must satisfy themselves by personal examination of the location of the proposed work and of the actual conditions and requirements of the work and shall not, at any time after the submission of a proposal, dispute or complain of such estimate or assert that there was any misunderstanding in regard to the depth and character of excavation and extent of dewatering to be made or the nature of the work to be done.

6. FORM, PREPARATION AND PRESENTATION OF PROPOSAL

In submitting the bid, the bid sheets furnished are to be filled in but not detached from the Contract Form. In no case is the Contract Form to be filled in or signed by the bidder. All proposals and either the certified check or bid bond must be placed in a sealed opaque envelope bearing the Bidder's firm name and address and marked, **"TOWN OF RIVERHEAD / RIVERHEAD SEWER DISTRICT 841 OLD COUNTRY ROAD SEWER MAIN & EASEMENT RELOCATION, CONTRACT NO. RDSD 18-01: SEWER CONSTRUCTION",** but otherwise unmarked. All blank spaces for bid prices must be filled in, in ink, in both works and figures, with the total or gross sum for which the bid is made. Bids that contain any omission, erasure, alteration, addition or items not called for in the itemized bid form or that contract irregularities of any kind may be rejected. In case of discrepancy between the unit price and total amount bid for any item, the unit price, as expressed in words, shall govern.

The Proposal contained herein shall be used in making out bids. Any proposal not in accordance with these instructions or containing bids not asked for may be rejected. While separate prices are required for various items under this contract, it is understood that the contract will be awarded as a whole.

As the estimates of quantities of items stated in the Proposal are approximate only, bidders are required to submit their proposal upon and in the following express conditions, which shall apply and become part of every proposal received.

Bids will be compared by total amounts; said total amount being the sum of the products of the quantities multiplied by the unit prices bid for the various unit price items, with due consideration being given to the lump sum prices bid and stipulated amounts for any contingent or optional items. Unbalanced bids will not be accepted.

Each bidder shall fill out in ink, in both words and figures, in the spaces provided, its unit or lump sum bid, as the case may be, for each item in said Proposal for which it is submitting a bid. If there is any discrepancy between the prices in words and figures, the prices in words shall govern as unit and lump sum prices.

A bid may not be considered valid which does not include bids for all items in the Proposal.

Each bidder must state, in its proposal, its full name and business address, and the full name of every person, firm or corporation, interested in same, and the address of every person or firm, or president and secretary of every corporation, interested with it.

If the contract is not awarded by the Town Board within ninety (90) days after the receipt of bids, the obligation of the bidder under this Proposal may terminate at its option and it shall thereupon be entitled to a refund of its certified check or release of its bid bond furnished by it as security with its proposal.

7. BID SECURITY

(A) The bid must be accompanied by a certified check on the solvent bank or trust company with its principal place of business in New York State, or an acceptable bid bond, in an amount equal to not less than five percent (5%) of the total bid, made payable to the town of Riverhead (herein identified as the Town), as assurance that the bid is made in good faith. The certified checks or bid bonds will be returned after execution of the contract between the Town and the successful bidder; the certified check or bid bond of the successful bidder will be retained until filing and approval of the Performance Bond and until the completion of ten percent (10%) of the work under the contract.

(B) The successful bidder, upon his failure or refusal to execute and deliver the contract insurance and bonds required within fourteen (14) days after the date of notice of the acceptance of his bid, shall forfeit to the Town, as liquidated damages for such failure or refusal, the security deposited with his bid.

(C) Each proposal must also be accompanied by a Letter of Intent from a surety company acceptable to the Town, which letter shall assure the Town that the bidder, if awarded the Contract, will be able to secure from the surety the required bonds in the required amounts.

8. QUALIFICATIONS OF BIDDERS

(A) Forms or qualifications of bidders, giving evidence of sufficient facilities, equipment, experience and financial ability to insure completion of the work will be provided, and the three lowest bidders shall be prepared to file at the option of the Town said form, properly filled in and sworn to in the Office of the Town Clerk within seven (7) days after the opening of bids.

(B) Information contained in any statement of financial ability shall be not more than thirty (30) days old at the time of submission. If a financial statement is already on file with the Town Clerk, a

new one need not be submitted provided the information contained therein is not more than thirty (30) days old at the time of the opening of bids and provided the contractor has not materially changed since submission of said statement.

9. REJECTION OF BIDS

(A) The Town Board reserves the right to waive any informalities in, or reject any bid if the evidence submitted in the qualifications statement or an investigation of such bidder fails to satisfy the Town Board that such bidder is reputable, reliable and responsible, and that they possess the necessary qualifications (financial, labor, equipment and otherwise properly qualified to carry out the obligations of the contract and to complete the work contemplated therein. The Board reserves the right to reject any and all bids which do not conform to the Proposal. Conditional bids will not be accepted.

(B) The Town Board shall be the sole judge of the qualifications of the bidders and of the merits thereof and reserves the right to reject any bid if the record of the bidder in the performance of contracts, payment of bills and meeting of obligations to subcontractors, material men or employees is not satisfactory to the Town Board, or if the evidence submitted by, or the investigation of, such bidders fails to satisfy the Town Board that it is properly qualified to carry out the obligations of the contract and to complete the work contemplated therein.

(C) The Town Board reserves the right to reject any and all bids, in whole or in part, to waive any information in any or all bids, and to accept the bid or part thereof which it deems most favorable to the Town after all bids have been examined and/or checked. No bid shall be withdrawn for a period of forty-five (45) days after being publicly opened and read.

(D) The Town Board reserves the right to reject any bids, in whole by a low bidder in which the owner of the low bidder has violated Prevailing Wage and Supplemental Payment Requirements of the Labor Law, and any other labor provisions, including but not limited to child labor violations, failure to pay wages, or unemployment insurance tax delinquencies within the past five (5) years. An owner is defined in this paragraph as an individual who owns more than 50% of a past or present company.

10. WITHDRAWAL OF BID

A. Any bid may be withdrawn prior to the Bid Opening Date and Time specified above or authorized postponement.

B. Bids may not be withdrawn before forty-five (45) days after the Bid Opening Date and Time, unless a clerical mistake or error is claimed by the Bidder.

C. If a Bidder claims to have made a clerical mistake or error in his Bid, he shall notify the Owner within the time limitations set forth in General Municipal Law Section 103 (11) (a) together with all documentary evidence in support of the Bidder's claim of a bid mistake or error.

11. BIDDER'S RESPONSIBILITY

(A) The Bidder shall include the complete cost of furnishing all materials, labor and equipment necessary to complete the work in accordance with the plans and specifications, including all other expenses incidental thereto.

(B) Bidders must examine the plans and specifications and exercise their own judgment as to the nature and amount of the whole of the work to be done, and for the bid prices, must assume all

risks of variance by whomever made in computation or statement of amounts or quantities necessary to fully complete the work in strict compliance with the contract documents.

(C) The contractor shall assume all risks and responsibility and shall complete the work in whatever material and under whatever conditions he may encounter or create, without extra cost to the Town.

(D) Attention is hereby particularly directed to the provisions of the contract whereby the Contractor will be responsible for any loss or damage that may happen to the work or any part thereof during its progress; and also, whereby the Contractor shall make good any defects or faults that may occur during the progress of the work or within twelve (12) months after date of the Engineer's approval of the final payment request.

(E) No plea of ignorance or misunderstanding of conditions that exist or that may hereafter exist, or of conditions or difficulties that may be encountered in the execution of the work under this contract, as a result of failure to make the necessary examinations and investigations, will be to fulfill in every detail all of the requirements of the contract documents, or will be accepted as a basis for any claims whatsoever for extra compensation or for extension of time.

12. SIGNATURE OF CONTRACTOR

The bidder to whom a contract may be awarded shall appear at the office of the Town Board, with the surety documents offered by it, within seven (7) days, Saturdays and Sundays excepted, after date of notification of the acceptance of its proposal, and there sign the contract in quadripartite for the work and furnish approved security for its performance.

In case of failure to do so, the bidder shall be considered as having abandoned the same, and the check accompanying its proposal shall be forfeited to the Town Board, or the penalty of the bid bond shall be invoked.

13. CONSTRUCTION TERMS AND CONDITIONS

The successful bidder is warned that the work specified in the Conditions of Contract, together with the Information to Bidders, Form of Bid, Plans and Specifications and Instruction of the Town Engineer, or his duly authorized representative, will be strictly enforced.

14. SECURITY FOR FAITHFUL PERFORMANCE AND MAINTENANCE

The successful bidder shall be required to furnish at the execution of the contract an executed bond of a surety company authorized to do business in the State of New York and approved by the Town Board, in an amount equal to 100% of the total amount of the contract, guaranteeing to the Board the faithful performance of the contract and payment of all claims for materials, labor and wages in connection therewith. Prior to the release of the Performance Bond, the Contractor shall deliver to the Town a Maintenance Bond equal to 100% of the total contract price, including all extras which shall remain in effect for a period of one (1) year from the date of the Engineer's approval of the final payment request as a Guarantee Bond.

15. FOREIGN CONTRACTORS

Foreign contractors must comply with the provisions of Articles 9A and 16 of the Tax Law, as amended, prior to submission of a bid for the performance of this work. The certificate of the New York State Tax Commission to the effect that all taxes have been paid by the foreign contractor shall be conclusive proof of the payment of taxes. The term “foreign contractor” as used in this subdivision means in the case of an

individual, a person who is a legal resident of another state or foreign country; and in the case of a foreign corporation, one organized under the laws of a state other than the State of New York.

16. LIEN LAW

Attention of all persons submitting bids is specifically called to the provisions of Section 25, Subdivision 5, Section 25A and 25B of the Lien Law, as amended, in relation to funds being received by a contractor for a public improvement declared to constitute trust funds in the hands of such contractor to be applied first to the payment of certain claims. Pursuant to Section 220-a of the Labor Law all contractors and subcontractors and subcontractors to subcontractors shall file an affidavit attesting to the payment to employees.

17. SUBCONTRACTORS AND SUPPLIERS

Within five days after receipt from the Town Engineer, or his representative, of notice to begin work, the contractor will furnish written notice of names of all subcontractors to be employed on the project and the general items of work to be dome by them. Simultaneously, the contractor shall furnish written notice of the names and suppliers of materials to be used on the project. The town may disapprove, for good cause, any subcontractor or material supplier selected by the contractor by giving written notice of its disapproval within five (5) days after receiving the names of subcontractors and material suppliers, to the contractor who shall thereupon promptly notify the town of the names of the subcontractor or material supplier selected in replacement which shall again be subject to approval by the town.

18. PENAL LAW

Attention is called to Section 1918 of the Penal Law as follows:

Construction or blasting near pipe conveying combustible gas

No person shall discharge explosives in the ground, nor shall any person other than a state or county employee regularly engaged in the maintenance and repair thereof excavate in any then existing street, highway, or public place, unless notice thereof in writing shall have been given at least seventy-two (72) hours in advance to the person, corporation or municipality engaged in the distribution of gas in such territory. The person having direction or control of such work shall give such notice, and further he shall ascertain whether there is within one hundred (100) feet in such street, highway or public place, or in the case of a proposed discharge of explosives within a radius of two hundred (200) feet of such discharge, any pipe of any other person, corporation or municipality conveying combustible gas, and if thereby any such pipe, he shall also five such notice to any other such person, corporation or municipality. Provided, however, that in any emergency involving danger to life, health, or property it shall be lawful to excavate without using explosives if the notices prescribed herein are given as soon as reasonably possible, and to discharge explosives to protect a person or persons from an immediate and substantial danger of death or serious personal injury is such notices are given before any such discharge is undertaken. Any such work shall be performed in such manner as to avoid danger to any pipe conveying combustible gas. Any violation of the provisions of this section shall be a misdemeanor.

19. REFUSAL TO WAIVE IMMUNITY

Pursuant to the provisions of Section 103-A of the General Municipal Law, in the event that the bidder or any members, partner, director or officer of the bidder, should refuse when called before a grand jury to testify concerning any transaction or contract had with the State, any political subdivision thereof, a public authority or with any public department, agency or official of the State, of any political subdivision thereof or of an authority, to sign a waiver of immunity against subsequent criminal prosecution or to answer any relevant questions concerning such transaction or contract, such person, and any firm, partnership or corporation of which he is a member, partner, firm director or officer shall be disqualified from thereafter

selling to or submitting bids to or receiving awards from or entering into any contracts with any municipal corporation or any public department, agency, or official thereof, for goods, work or services, for a period of five (5) years after such refusal, and any and all contracts made with any municipal corporation or any public department, agency or official thereof on or after the first day of July, 1959, by, such person and any firm, partnership or corporation of which he is a member, partner, director or officer may be canceled or terminated by the municipal corporation without incurring any penalty or damages on account of such cancellation of termination, but any monies owing by the municipal corporation for goods delivered or work done prior to the cancellation or termination shall be paid.

20. ADDENDA AND INTERPRETATIONS

Every request for information or interpretation of the Contract Documents or Drawings must be addressed in writing to Steven C. Hearl, P.E., Vice President, H2M architects + engineers, 538 Broad Hollow Road, 4th Floor East, Melville, New York, 11747 and to be given any consideration, must be received at least five (5) days prior to the date fixed for the opening of bids. Any such interpretations or supplemental instructions will be in the form of written addenda, and will be mailed to all prospective bidders. The failure of any bidder to receive any such addenda will not relieve the bidders of any obligations under his bid as submitted. Any addenda so issued shall become part of the Contract Documents.

21. LIQUIDATED DAMAGES

Liquidated damages in the amount of One Thousand Dollars and 00 Cents ($1,000.00) will be assessed for each consecutive calendar day of delay not excusable as provided in the Contract Documents.

22. EXEMPTION FROM SALES AND USE TAXES

In accordance with Chapter 513 of the laws of 1974 adopted by the New York State Legislature, amending Section 1115(a) of the tax law, specifically paragraphs 15 and 16, political subdivisions, as described in subdivision (a) paragraph (L) of Section 1116 of the tax laws, of the State of New York are exempt from the payment of sales and use taxes imposed on tangible personal property within the limitations specified in tax law 115 (a) (15) and (16).

(15) Tangible personal property sold to a contractor, subcontractor or repairman for use in erecting structure or building of an organization described in subdivision (a) of Section 116, or adding to, altering or improving real property, property or land of such an organization, as the terms real property, property and land are defined in the real property tax law; provided, however, no exemption shall exist under this paragraph unless such tangible personal property is to become an integral component part of such structure, building or real property.

(16) Tangible personal property sold to a contractor or repairman for use in maintaining, servicing or repairing real property, or land of an organization described in subdivision (a) of Section 116, as the terms real property, property or land are defined in the real property tax law; provided, however, no exemption shall exist under this paragraph unless such tangible personal property is to become an integral component part of such structure, building or real property.

Contractors entering into contract with the Town of Riverhead shall be exempt from payment of sales and use tax described above. Procedures and forms are available to the contractor direct from the Instructions and Interpretations Unit, State of New York, Department of Taxation and Finance, State Campus, Albany, New York 12227.

23. METHOD OF AWARD

All bids will be compared based on the lowest bid price(s) submitted for the work to be done in addition to the qualifications of the bidder. Bidder may be requested to submit additional information such as references.

24. TIME FOR COMMENCEMENT OF WORK

The bidder, when submitting his bid, must be prepared to commence work not later than Twenty-Eight (28) days after receiving a Notice to Proceed.

Work shall commence as stipulated in the construction schedule provided by the Town of Riverhead or alternate schedule provided by the Contractor which alternate schedule is acceptable to the Town and shall meet the stipulations of this contract. The entire work must be satisfactorily completed and the project improvements available for use within the completion time stipulated. For additional information see Conditions of Contract, Section 5, Time of Completion.

25. PAYMENT

Upon completion of the work under this contract, the contractor shall notify the Town Engineer of his completion. The Town Engineer will then make a final inspection and submit to the contractor a "punch list" if required. Upon final acceptance of the work by the Town Engineer, the contractor shall be paid one lump sum payment equal to the amount bid herein minus previous payments and plus or minus other contract approved charge orders. Contractor shall submit a Receipt on company letterhead in the amount billed, a signed Town of Riverhead Voucher, Certified Payroll Records, Wage Disclaimer and the No Lien Affidavit attesting to the payment of employees. Payment shall not be processed until all necessary paperwork is received.

26. NYS LABOR LAW

The contractor and each and every subcontractor performing work at the site of the project to which this contract relates shall comply with the applicable provisions of the Labor Law, as amended, of the State of New York.

27. NYS WAGE RATES

The rates of wages determined by the New York State Industrial Commissioner pursuant to the Labor Law, which are to be paid on this project, are set forth herein immediately following:

PREVAILING WAGE RATES
PRESENTED ON THE FOLLOWING PAGES

28. FEDERAL LABOR LAW

If this project is being assisted by funding from the Federal Government of the United States of America under one or more current federal funding programs, and as such, the performance of all work contemplated under the terms and conditions of this set of plans, specifications and related documents must conform to certain basic and specific standards and requirements of both Federal and New York State governments.

29. FEDERAL WAGE RATES

The rates of wages determined by the Federal Government of the United State of America pursuant to the Labor Law, which are to be paid on this project are set forth herein immediately following:

30. INSURANCE REQUIRED BY THE TOWN OF RIVERHEAD

The Contractor shall not commence any work until it has obtained and had approved by the Town all of the insurance specified and required by the Contract.

The successful bidder will be required to procure and pay for the following types of insurance, in accordance with the provisions of the Conditions of Contract:

(A) Workers' Compensation Insurance.
(B) Public Liability and Property Damage.
(C) Contractor's Liability and Contractor's Property Damage.
(D) Owner's Protective Public Liability and Property Damage.

Insurance documents meeting the requirements of Conditions of Contract, Section 38, Contractor's Insurance, shall be submitted within 14 calendar days from the date of award. Failure to provide acceptable insurance certificate(s) within this time frame shall result in the termination of Primary Contractor status.

The Contractor shall not permit any subcontractor to commence any operation on the site until satisfactory proof of carriage of the above required insurance has been posted with, and approved by, the Town Board.

31. TERM OF CONTRACT

The term of this contract shall be until the completion date set by the Notice to Proceed and the length of contract time (calendar days) as stipulated in the Proposal Form. The Town of Riverhead shall have the option of extending this contract upon good cause shown by the Contractor.

32. CERTIFIED PAYROLL RECORDS

State of New York Department of Labor

On September 10, 1997, Governor Pataki signed into law Assembly Bill 6394-B amending Article 8, Section 220, of the NYS labor Law to include the following language:

Every contractor and sub-contractor shall submit to the department of jurisdiction within thirty (30) days after issuance of its first payroll, and every thirty (30) days thereafter, a transcript of the original payroll record, as provided by this article, subscribed and affirmed as true under penalties of perjury. The DEPARTMENT OF JURISDICTION shall be required to receive and maintain such payroll records.

The original payrolls or transcripts shall be preserved for three years from the completion of the work on the awarded project.

This law took effect on November 9, 1997.

Form WH-347 Inst. is included in this package for contractor's convenience and must be completed, for the current payment request period, including all payroll information for all employees and subcontractor employees including but not limited to laborers, mechanics, foremen, supervisors, etc.

Department of Labor
Bureau of Public Work

WEEKLY PAYROLL

For Contractor's Optional Use. The use of this form meets payroll notification requirements; as stated on the Payroll Records Notification.

NAME OF CONTRACTOR ☐ SUBCONTRACTOR ☐		ADDRESS	
FEIN	FOR WEEK ENDING	PROJECT AND LOCATION	PROJECT OR CONTRACTOR NO.

(1) NAME, ADDRESS, AND LAST 4 DIGITS OF SOCIAL SECURITY NUMBER OF EMPLOYEE	(2) NO. OF WITH-HOLDINGS	(3) WORK CLASSIFICATION	ST or OT	(4) DAY AND DATE / HOURS WORKED EACH DAY							(5) TOTAL HOURS	(6) RATE OF PAY	(7) GROSS AMOUNT EARNED	(8) DEDUCTIONS: FICA	WITH-HOLDING Tax			OTHER	TOTAL DEDUCTIONS	(9) NET WAGES PAID FOR WEEK
			S										$0.00							$0.00
			O																	
			S										$0.00							$0.00
			O																	
			S										$0.00							$0.00
			O																	
			S										$0.00							$0.00
			O																	
			S										$0.00							$0.00
			O																	
			S										$0.00							$0.00
			O																	
			S										$0.00							$0.00
			O																	
			S										$0.00							$0.00
			O																	
			S										$0.00							$0.00
			O																	

PW -12 (12-09)

THIS CERTIFICATION MUST BE COMPLETED ON EACH WEEKLY PAYROLL FORM USED BY THE CONTRACTOR OR SUBCONTRACTOR

Date _____

I _____ _____
(Name of signatory party) (Title)

do hereby state:

(1) That I pay or supervise the payment of the persons employed by _____

_____
(Contractor or Subcontractor)

_____, that during the payroll period commencing on the _____

day of _____, 20 , and ending the _____ day of _____ 20
all persons employed on said project have been paid the full weekly wages earned, that no rebates have been or will be made either directly or indirectly to or on behalf of said

_____ from the full
(Contractor or Subcontractor)

weekly wages earned by any person and that no deductions have been made either directly or indirectly from the full wages earned by any person, other than permissible deductions as defined in Articles 8 and 9 and described below:

_____

(2) That any payrolls submitted for the above period are correct and complete; that the wage rates for laborers, workers, or mechanics contained therein are not less than the applicable wage rates contained in any wage determination incorporated into the contract; that the classifications set forth therein for each laborer, worker or mechanic conform with the work he/she performed.

(3) That any apprentices employed in the above period are duly registered in a bona fide apprenticeship program registered with a State apprenticeship agency recognized by the Bureau of Apprenticeship and Training, United States Department of Labor, or if no such recognized agency exists in a State, are registered with the Bureau of Apprenticeship and Training, United States Department of Labor.

(4) That:

(a) WHERE FRINGE BENEFITS ARE PAID TO APPROVED PLANS, FUNDS, OR PROGRAMS

☐ - In addition to the basic hourly wage rates paid to each laborer, worker or mechanic listed in the above referenced payroll, payments of fringe benefits as listed in the contract have been or will be made to appropriate programs for the benefit of such employees, except as noted in Section 4(c).

(b) WHERE FRINGE BENEFITS ARE PAID IN CASH

☐ - Each laborer, worker, or mechanic listed in the above-referenced payroll has been paid, as indicated on the payroll, an amount not less than the sum of the applicable basic hourly wage rate plus the amount of the required fringe benefits as listed in the contract, except as noted in Section 4(c) below.

(c) EXCEPTIONS

EXCEPTION (CRAFT)	EXPLANATION

REMARKS:

SIGNATURE

THE WILLFUL FALSIFICATION OF ANY OF THE ABOVE STATEMENTS MAY SUBJECT THE CONTRACTOR OR SUBCONTRACTOR TO CIVIL OR CRIMINAL PROSECUTION. SEE ARTICLES 8 AND 9.

PERSONAL PERFORMANCE FORM
STATEMENT TO BE SUBMITTED
WHEN WORK IS PERFORMED PERSONALLY
(SECTION 10001, TITLE 18, US CODE)

I, _____, hereby certify that I am the

_____ of _____
Title **Name of Firm Submitting Statement**

_____ for _____
Prime Contractor or Subcontractor **Nature of Work**

at _____, located in _____
Name of Building work being done **City and State**

under contract number _____
Government Contract No. (See No. 3 Below)

that _____
State All Work or List the Specific Classes of Work

was done personally by _____
Names of Person(s) Performing Work & Their Connection w/ Firm

_____

that no wages were received for the labor performed; that no mechanics or laborers were employed in the prosecution thereof; and that the work was done during the following periods:
_____ to _____
Beginning Date **Ending Date**

Last date on which work was performed at the site was _____

_____
Signature

_____
Title

Section 100001 of Title 18 of the United State Code (Criminal Code and Criminal Procedures) shall apply to such statements – 72 Stat 887, 18 U.S.C., among other things, provides that whoever knowingly and willfully makes or uses a document or writing containing any false, fictitious or fraudulent statement or entry, in any matter within the jurisdiction of any department or agency of the United State, shall be fined not more than $10,000 or imprisoned not more than five years, or both).

U.S. Department of Labor
Wage and Hour Division

PAYROLL

(For Contractor's Optional Use; See Instructions at www.dol.gov/whd/forms/wh347instr.htm)

Persons are not required to respond to the collection of information unless it displays a currently valid OMB control number.

U.S. Wage and Hour Division
Rev. Dec. 2008

OMB No.: 1235-0008
Expires: 02/28/2018

NAME OF CONTRACTOR ☐ OR SUBCONTRACTOR ☐

ADDRESS

PAYROLL NO.

FOR WEEK ENDING

PROJECT AND LOCATION

PROJECT OR CONTRACT NO.

(1) NAME AND INDIVIDUAL IDENTIFYING NUMBER (e.g., LAST FOUR DIGITS OF SOCIAL SECURITY NUMBER) OF WORKER	(2) NO. OF WITHHOLDING EXEMPTIONS	(3) WORK CLASSIFICATION	OT. OR ST.	(4) DAY AND DATE / HOURS WORKED EACH DAY							(5) TOTAL HOURS	(6) RATE OF PAY	(7) GROSS AMOUNT EARNED	(8) DEDUCTIONS FICA	WITH-HOLDING TAX			OTHER	TOTAL DEDUCTIONS	(9) NET WAGES PAID FOR WEEK
			O																	
			S																	
			O																	
			S																	
			O																	
			S																	
			O																	
			S																	
			O																	
			S																	
			O																	
			S																	
			O																	
			S																	
			O																	
			S																	

While completion of Form WH-347 is optional, it is mandatory for covered contractors and subcontractors performing work on Federally financed or assisted construction contracts to respond to the information collection contained in 29 C.F.R. §§ 3.3, 5.5(a). The Copeland Act (40 U.S.C. § 3145) contractors and subcontractors performing work on Federally financed or assisted construction contracts to "furnish weekly a statement with respect to the wages paid each employee during the preceding week." U.S. Department of Labor (DOL) regulations at 29 C.F.R. § 5.5(a)(3)(ii) require contractors to submit weekly a copy of all payrolls to the Federal agency contracting for or financing the construction project, accompanied by a signed "Statement of Compliance" indicating that the payrolls are correct and complete and that each laborer or mechanic has been paid not less than the proper Davis-Bacon prevailing wage rate for the work performed. DOL and federal contracting agencies receiving this information review the information to determine that employees have received legally required wages and fringe benefits.

Public Burden Statement

We estimate that is will take an average of 55 minutes to complete this collection, including time for reviewing instructions, searching existing data sources, gathering and maintaining the data needed, and completing and reviewing the collection of information. If you have any comments regarding these estimates or any other aspect of this collection, including suggestions for reducing this burden, send them to the Administrator, Wage and Hour Division, U.S. Department of Labor, Room S3502, 200 Constitution Avenue, N.W. Washington, D.C. 20210

(over)

Date _____

I, _____ _____
(Name of Signatory Party) (Title)

do hereby state:

(1) That I pay or supervise the payment of the persons employed by

_____ on the
(Contractor or Subcontractor)

_____; that during the payroll period commencing on the
(Building or Work)

_____ day of _____, _____, and ending the _____ day of _____, _____,

all persons employed on said project have been paid the full weekly wages earned, that no rebates have been or will be made either directly or indirectly to or on behalf of said

_____ from the full
(Contractor or Subcontractor)

weekly wages earned by any person and that no deductions have been made either directly or indirectly from the full wages earned by any person, other than permissible deductions as defined in Regulations, Part 3 (29 C.F.R. Subtitle A), issued by the Secretary of Labor under the Copeland Act, as amended (48 Stat. 948, 63 Stat. 108, 72 Stat. 967; 76 Stat. 357; 40 U.S.C. § 3145), and described below:

_____

_____

_____

_____

(2) That any payrolls otherwise under this contract required to be submitted for the above period are correct and complete; that the wage rates for laborers or mechanics contained therein are not less than the applicable wage rates contained in any wage determination incorporated into the contract; that the classifications set forth therein for each laborer or mechanic conform with the work he performed.

(3) That any apprentices employed in the above period are duly registered in a bona fide apprenticeship program registered with a State apprenticeship agency recognized by the Bureau of Apprenticeship and Training, United States Department of Labor, or if no such recognized agency exists in a State, are registered with the Bureau of Apprenticeship and Training, United States Department of Labor.

(4) That:

(a) WHERE FRINGE BENEFITS ARE PAID TO APPROVED PLANS, FUNDS, OR PROGRAMS

☐ – in addition to the basic hourly wage rates paid to each laborer or mechanic listed in the above referenced payroll, payments of fringe benefits as listed in the contract have been or will be made to appropriate programs for the benefit of such employees, except as noted in section 4(c) below.

(b) WHERE FRINGE BENEFITS ARE PAID IN CASH

☐ – Each laborer or mechanic listed in the above referenced payroll has been paid, as indicated on the payroll, an amount not less than the sum of the applicable basic hourly wage rate plus the amount of the required fringe benefits as listed in the contract, except as noted in section 4(c) below.

(c) EXCEPTIONS

EXCEPTION (CRAFT)	EXPLANATION

REMARKS:

NAME AND TITLE	SIGNATURE

THE WILLFUL FALSIFICATION OF ANY OF THE ABOVE STATEMENTS MAY SUBJECT THE CONTRACTOR OR SUBCONTRACTOR TO CIVIL OR CRIMINAL PROSECUTION. SEE SECTION 1001 OF TITLE 18 AND SECTION 231 OF TITLE 31 OF THE UNITED STATES CODE

Instructions for Submission of Statements of Work Performed Personally

1. Prime contractors or subcontractors who perform the work are required to submit in lieu of weekly statements of compliance and payrolls with respect to the payment of wages pursuant to the Copeland Anti-kickbacks regulations, a certified statement clearly showing (1) their contractual relationship,; (2) the scope and dates of work performed (3) that they received no wages; and (4) that no mechanics or laborers were employed in the prosecution of the work. The aforementioned sample form sets forth the wording described for such certified statements.

2. Prime contractors are responsible for the submission of the certified statements of subcontractors. Subcontractors' statement should be forwarded to the prime contractor for transmission to the Government contracting officer or his designated representative. Statements of prime contractors and subcontractors should be submitted as soon as possible after the last date on which work was performed at the site.

3. To facilitate identification of the project involved, prime contractors should provide their subcontractors with the Government contract number (if exists) or project name as called for on statement form.

4. Prime contractors should furnish their subcontractors with copies of the sample statement form so as to facilitate submission of the necessary information.

33. NO LIEN AFFIDAVIT & WAGE DISCLAIMER

State of New York Department of Labor

Pursuant to Section 220-a of the New York State Labor Law all contractors, subcontractors and subcontractors to subcontractors must file an affidavit pertaining to the payment of all laborers and mechanics, exclusive of supervisory employees.

Affidavit Form 220 and Town of Riverhead Wage Disclaimer Form is included in this package for contractor's convenience. Unless given at later date, leave project number blank.

NOTE: Bidders are advised that this is not a contract authorizing any work. It is the option of the Town to authorize work at any time of the year. Any Town department or agency can use this contract.

MUNICIPAL CORPORATION

TOWN OF RIVERHEAD
200 HOWELL AVENUE
RIVERHEAD, NY 11901

CONTRACT NAME:_____ PROJECT No.: _____

AFFIDAVIT

Pursuant to Section 220-a of the Labor Law and Town of Riverhead Requirements

Note: All contractors, subcontractors, and subcontractors of subcontractors must file this statement for each payment period requested.

I, _____, _____
Name Title

of _____Contractor
Name of Firm _____Subcontractor
Project No.: _____ With: _____
Contractor Name
for _____
Indicate Nature of Work
at_____ hereby certify that all laborers have been paid in full for period ended _, 20 __. and that there is now due and owning from it/me to any and all laborers (laborers include all laborers, mechanics, foremen and supervisory employees) for daily or weekly wages or supplements on account of labor performed upon the work under said contract, the following amounts to the persons whose names are set forth below opposite such amounts. (If none, so state.)

$ _____ due and owing to _____
$ _____ due and owing to _____
$ _____ due and owing to _____
$ _____ due and owing to _____
Use additional sheet if necessary.

I further certify that I have contracted with the firms listed below as subcontractors, for labor to be performed upon the work under said contract for the current pay period requested. (If none, so state.)

Names and Address of Subcontractors	Type of Work
_____	_____
_____	_____
_____	_____

Use additional sheet if necessary

_____
Signature

STATE OF NEW YORK
SS:
COUNTY OF: _____

On this _____ day of _____ 20____, personally appeared before me _____
_____
to me known and known to me who being by me duly sworn said that he is _____
_____
(Officer)
of _____ the _____
(Contractor or Subcontractor) (Corporation or Partnership)

for which he executed the foregoing statement, for and in behalf of the said _____ _____ contractor; that he has read the said statement so signed by him and known to be the seal thereof and that the same is true and to his own knowledge.

_____ Dated: _____

Notary Public

Section 220-c Labor Law. Any Contractor or subcontractor who shall upon his oath verify any statement required to be filed under this act which is known by him to be false, shall be guilty of perjury and punishable as provided by Section One Thousand Six Hundred and Thirty-Three of the Penal Law.

TOWN OF RIVERHEAD
WAGE DISCLAIMER

Note: All contractors, subcontractors, and subcontractor of subcontractors must file this statement for each payment period request.

DATE: _____

TO: TOWN OF RIVERHEAD

FROM: _____
(Contractor)

PROJECT: _____

To our knowledge, the laborers listed on the attached certified payrolls have been paid the prevailing wage rates as established by the Department of Labor.

_____
Signature

_____
Title

_____
Date

Andrew M. Cuomo, Governor

Roberta Reardon, Commissioner

Riverhead Sewer District

Nicholas Bono, Discipline Engineer
H2M
538 Broad Hollow Rd.
Melville NY 11747

Schedule Year	2017 through 2018
Date Requested	05/16/2018
PRC#	2018005520

Location	Riverhead Sewer District
Project ID#	RDSD 1801
Project Type	Relocation of existing gravity sewer at 841 Old Country Road property

PREVAILING WAGE SCHEDULE FOR ARTICLE 8 PUBLIC WORK PROJECT

Attached is the current schedule(s) of the prevailing wage rates and prevailing hourly supplements for the project referenced above. A unique Prevailing Wage Case Number (PRC#) has been assigned to the schedule(s) for your project.

The schedule is effective from July 2017 through June 2018. All updates, corrections, posted on the 1st business day of each month, and future copies of the annual determination are available on the Department's website www.labor.state.ny.us. Updated PDF copies of your schedule can be accessed by entering your assigned PRC# at the proper location on the website.

It is the responsibility of the contracting agency or its agent to annex and make part, the attached schedule, to the specifications for this project, when it is advertised for bids and /or to forward said schedules to the successful bidder(s), immediately upon receipt, in order to insure the proper payment of wages.

Please refer to the "General Provisions of Laws Covering Workers on Public Work Contracts" provided with this schedule, for the specific details relating to other responsibilities of the Department of Jurisdiction.

Upon completion or cancellation of this project, enter the required information and mail **OR** fax this form to the office shown at the bottom of this notice, **OR** fill out the electronic version via the NYSDOL website.

NOTICE OF COMPLETION / CANCELLATION OF PROJECT

Date Completed: _____ Date Cancelled: _____

Name & Title of Representative: _____

Phone: (518) 457-5589 Fax: (518) 485-1870
W. Averell Harriman State Office Campus, Bldg. 12, Room 130, Albany, NY 12240

General Provisions of Laws Covering Workers on Article 8 Public Work Contracts

Introduction

The Labor Law requires public work contractors and subcontractors to pay laborers, workers, or mechanics employed in the performance of a public work contract not less than the prevailing rate of wage and supplements (fringe benefits) in the locality where the work is performed.

Responsibilities of the Department of Jurisdiction

A Department of Jurisdiction (Contracting Agency) includes a state department, agency, board or commission: a county, city, town or village; a school district, board of education or board of cooperative educational services; a sewer, water, fire, improvement and other district corporation; a public benefit corporation; and a public authority awarding a public work contract.

The Department of Jurisdiction (Contracting Agency) awarding a public work contract MUST obtain a Prevailing Rate Schedule listing the hourly rates of wages and supplements due the workers to be employed on a public work project. This schedule may be obtained by completing and forwarding a "Request for wage and Supplement Information" form (PW 39) to the Bureau of Public Work. The Prevailing Rate Schedule MUST be included in the specifications for the contract to be awarded and is deemed part of the public work contract.

Upon the awarding of the contract, the law requires that the Department of Jurisdiction (Contracting Agency) furnish the following information to the Bureau: the name and address of the contractor, the date the contract was let and the approximate dollar value of the contract. To facilitate compliance with this provision of the Labor Law, a copy of the Department's "Notice of Contract Award" form (PW 16) is provided with the original Prevailing Rate Schedule.

The Department of Jurisdiction (Contracting Agency) is required to notify the Bureau of the completion or cancellation of any public work project. The Department's PW 200 form is provided for that purpose.

Both the PW 16 and PW 200 forms are available for completion online.

Hours

No laborer, worker, or mechanic in the employ of a contractor or subcontractor engaged in the performance of any public work project shall be permitted to work more than eight hours in any day or more than five days in any week, except in cases of extraordinary emergency. The contractor and the Department of Jurisdiction (Contracting Agency) may apply to the Bureau of Public Work for a dispensation permitting workers to work additional hours or days per week on a particular public work project. There are very few exceptions to this rule. Complete information regarding these exceptions is available on the "4 Day / 10 Hour Work Schedule" form (PW 30.1).

Wages and Supplements

The wages and supplements to be paid and/or provided to laborers, workers, and mechanics employed on a public work project shall be not less than those listed in the current Prevailing Rate Schedule for the locality where the work is performed. If a prime contractor on a public work project has not been provided with a Prevailing Rate Schedule, the contractor must notify the Department of Jurisdiction (Contracting Agency) who in turn must request an original Prevailing Rate Schedule form the Bureau of Public Work. Requests may be submitted by: mail to NYSDOL, Bureau of Public Work, State Office Bldg. Campus, Bldg. 12, Rm. 130, Albany, NY 12240; Fax to Bureau of Public Work (518) 485-1870; or electronically at the NYSDOL website www.labor.state.ny.us.

Upon receiving the original schedule, the Department of Jurisdiction (Contracting Agency) is REQUIRED to provide complete copies to all prime contractors who in turn MUST, by law, provide copies of all applicable county schedules to each subcontractor and obtain from each subcontractor, an affidavit certifying such schedules were received. If the original schedule expired, the contractor may obtain a copy of the new annual determination from the NYSDOL website www.labor.state.ny.us.

The Commissioner of Labor makes an annual determination of the prevailing rates. This determination is in effect from July 1st through June 30th of the following year. The annual determination is available on the NYSDOL website www.labor.state.ny.us.

Payrolls and Payroll Records

Every contractor and subcontractor MUST keep original payrolls or transcripts subscribed and affirmed as true under penalty of perjury. Payrolls must be maintained for at least Five (5) years from the project's date of completion. See Spota Bill Notice. At a minimum, payrolls must show the following information for each person employed on a public work project: Name, Address, Last 4 Digits of Social Security Number, Classification(s) in which the worker was employed, Hourly wage rate(s) paid, Supplements paid or provided, and Daily and weekly number of hours worked in each classification.

The filing of payrolls to the Department of Jurisdiction is a condition of payment. Every contractor and subcontractor shall submit to the Department of Jurisdiction (Contracting Agency), within thirty (30) days after issuance of its first payroll and every thirty (30) days thereafter, a transcript of the original payrolls, subscribed and affirmed as true under penalty of perjury. The Department of Jurisdiction (Contracting Agency) shall collect, review for facial validity, and maintain such payrolls.

In addition, the Commissioner of Labor may require contractors to furnish, with ten (10) days of a request, payroll records sworn to as their validity and accuracy for public work and private work. Payroll records include, by are not limited to time cards, work description sheets, proof that supplements were provided, cancelled payroll checks and payrolls. Failure to provide the requested information within the allotted ten (10) days will result in the withholding of up to 25% of the contract, not to exceed $100,000.00. If the contractor or subcontractor does not maintain a place of business in New York State and the amount of the contract exceeds $25,000.00, payroll records and certifications must be kept on the project worksite.

The prime contractor is responsible for any underpayments of prevailing wages or supplements by any subcontractor.

All contractors or their subcontractors shall provide to their subcontractors a copy of the Prevailing Rate Schedule specified in the public work contract as well as any subsequently issued schedules. A failure to provide these schedules by a contractor or subcontractor is a violation of Article 8, Section 220-a of the Labor Law.

All subcontractors engaged by a public work project contractor or its subcontractor, upon receipt of the original schedule and any subsequently issued schedules, shall provide to such contractor a verified statement attesting that the subcontractor has received the Prevailing Rate Schedule and will pay or provide the applicable rates of wages and supplements specified therein. (See NYS Labor Laws, Article 8 . Section 220-a).

Determination of Prevailing Wage and Supplement Rate Updates Applicable to All Counties

The wages and supplements contained in the annual determination become effective July 1st whether or not the new determination has been received by a given contractor. Care should be taken to review the rates for obvious errors. Any corrections should be brought to the Department's attention immediately. It is the responsibility of the public work contractor to use the proper rates. If there is a question on the proper classification to be used, please call the district office located nearest the project. Any errors in the annual determination will be corrected and posted to the NYSDOL website on the first business day of each month. Contractors are responsible for paying these updated rates as well, retroactive to July 1st.

When you review the schedule for a particular occupation, your attention should be directed to the dates above the column of rates. These are the dates for which a given set of rates is effective. To the extent possible, the Department posts rates in its possession that cover periods of time beyond the July 1st to June 30th time frame covered by a particular annual determination. Rates that extend beyond that instant time period are informational ONLY and may be updated in future annual determinations that actually cover the then appropriate July 1st to June 30th time period.

Withholding of Payments

When a complaint is filed with the Commissioner of Labor alleging the failure of a contractor or subcontractor to pay or provide the prevailing wages or supplements, or when the Commissioner of Labor believes that unpaid wages or supplements may be due, payments on the public work contract shall be withheld from the prime contractor in a sufficient amount to satisfy the alleged unpaid wages and supplements, including interest and civil penalty, pending a final determination.

When the Bureau of Public Work finds that a contractor or subcontractor on a public work project failed to pay or provide the requisite prevailing wages or supplements, the Bureau is authorized by Sections 220-b and 235.2 of the Labor Law to so notify the financial officer of the Department of Jurisdiction (Contracting Agency) that awarded the public work contract. Such officer MUST then withhold or cause to be withheld from any payment due the prime contractor on account of such contract the amount indicated by the Bureau as sufficient to satisfy the unpaid wages and supplements, including interest and any civil penalty that may be assessed by the Commissioner of Labor. The withholding continues until there is a final determination of the underpayment by the Commissioner of Labor or by the court in the event a legal proceeding is instituted for review of the determination of the Commissioner of Labor.

The Department of Jurisdiction (Contracting Agency) shall comply with this order of the Commissioner of Labor or of the court with respect to the release of the funds so withheld.

Summary of Notice Posting Requirements

The current Prevailing Rate Schedule must be posted in a prominent and accessible place on the site of the public work project. The prevailing wage schedule must be encased in, or constructed of, materials capable of withstanding adverse weather conditions and be titled "PREVAILING RATE OF WAGES" in letters no smaller than two (2) inches by two (2) inches.

The "Public Work Project" notice must be posted at the beginning of the performance of every public work contract, on each job site.

Every employer providing workers. compensation insurance and disability benefits must post notices of such coverage in the format prescribed by the Workers. Compensation Board in a conspicuous place on the jobsite.

Every employer subject to the NYS Human Rights Law must conspicuously post at its offices, places of employment, or employment training centers, notices furnished by the State Division of Human Rights.

Employers liable for contributions under the Unemployment Insurance Law must conspicuously post on the jobsite notices furnished by the NYS Department of Labor.

Apprentices

Employees cannot be paid apprentice rates unless they are individually registered in a program registered with the NYS Commissioner of Labor. The allowable ratio of apprentices to journeyworkers in any craft classification can be no greater than the statewide building trade ratios promulgated by the Department of Labor and included with the Prevailing Rate Schedule. An employee listed on a payroll as an apprentice who is not registered as above or is performing work outside the classification of work for which the apprentice is indentured, must be paid the prevailing journeyworker's wage rate for the classification of work the employee is actually performing.

NYSDOL Labor Law, Article 8, Section 220-3, require that only apprentices individually registered with the NYS Department of Labor may be paid apprenticeship rates on a public work project. No other Federal or State Agency of office registers apprentices in New York State.

Persons wishing to verify the apprentice registration of any person must do so in writing by mail, to the NYSDOL Office of Employability Development / Apprenticeship Training, State Office Bldg. Campus, Bldg. 12, Albany, NY 12240 or by Fax to NYSDOL Apprenticeship Training (518) 457-7154. All requests for verification must include the name and social security number of the person for whom the information is requested.

The only conclusive proof of individual apprentice registration is written verification from the NYSDOL Apprenticeship Training Albany Central office. Neither Federal nor State Apprenticeship Training offices outside of Albany can provide conclusive registration information.

It should be noted that the existence of a registered apprenticeship program is not conclusive proof that any person is registered in that program. Furthermore, the existence or possession of wallet cards, identification cards, or copies of state forms is not conclusive proof of the registration of any person as an apprentice.

Interest and Penalties

In the event that an underpayment of wages and/or supplements is found:

- Interest shall be assessed at the rate then in effect as prescribed by the Superintendent of Banks pursuant to section 14-a of the Banking Law, per annum from the date of underpayment to the date restitution is made.
- A Civil Penalty may also be assessed, not to exceed 25% of the total of wages, supplements, and interest due.

Debarment

Any contractor or subcontractor and/or its successor shall be ineligible to submit a bid on or be awarded any public work contract or subcontract with any state, municipal corporation or public body for a period of five (5) years when:

- Two (2) willful determinations have been rendered against that contractor or subcontractor and/or its successor within any consecutive six (6) year period.
- There is any willful determination that involves the falsification of payroll records or the kickback of wages or supplements.

Criminal Sanctions

Willful violations of the Prevailing Wage Law (Article 8 of the Labor Law) may be a felony punishable by fine or imprisonment of up to 15 years, or both.

Discrimination

No employee or applicant for employment may be discriminated against on account of age, race, creed, color, national origin, sex, disability or marital status.

No contractor, subcontractor nor any person acting on its behalf, shall by reason of race, creed, color, disability, sex or national origin discriminate against any citizen of the State of New York who is qualified and available to perform the work to which the employment relates (NYS Labor Law, Article 8, Section 220-e(a)).

No contractor, subcontractor, nor any person acting on its behalf, shall in any manner, discriminate against or intimidate any employee on account of race, creed, color, disability, sex, or national origin (NYS Labor Law, Article 8, Section 220-e(b)).

The Human Rights Law also prohibits discrimination in employment because of age, marital status, or religion.

There may be deducted from the amount payable to the contractor under the contract a penalty of $50.00 for each calendar day during which such person was discriminated against or intimidated in violation of the provision of the contract (NYS Labor Law, Article 8, Section 220-e(c)).

The contract may be cancelled or terminated by the State or municipality. All monies due or to become due thereunder may be forfeited for a second or any subsequent violation of the terms or conditions of the anti-discrimination sections of the contract (NYS Labor Law, Article 8, Section 220-e(d)).

Every employer subject to the New York State Human Rights Law must conspicuously post at its offices, places of employment, or employment training centers notices furnished by the State Division of Human Rights.

Workers' Compensation

In accordance with Section 142 of the State Finance Law, the contractor shall maintain coverage during the life of the contract for the benefit of such employees as required by the provisions of the New York State Workers' Compensation Law.

A contractor who is awarded a public work contract must provide proof of workers' compensation coverage prior to being allowed to begin work.

The insurance policy must be issued by a company authorized to provide workers' compensation coverage in New York State. Proof of coverage must be on form C-105.2 (Certificate of Workers' Compensation Insurance) and must name this agency as a certificate holder.

If New York State coverage is added to an existing out-of-state policy, it can only be added to a policy from a company authorized to write workers' compensation coverage in this state. The coverage must be listed under item 3A of the information page.

The contractor must maintain proof that subcontractors doing work covered under this contract secured and maintained a workers' compensation policy for all employees working in New York State.

Every employer providing worker's compensation insurance and disability benefits must post notices of such coverage in the format prescribed by the Workers' Compensation Board in a conspicuous place on the jobsite.

Unemployment Insurance

Employers liable for contributions under the Unemployment Insurance Law must conspicuously post on the jobsite notices furnished by the New York State Department of Labor.

Andrew M. Cuomo, Governor

Roberta Reardon, Commissioner

Riverhead Sewer District

Nicholas Bono, Discipline Engineer
H2M
538 Broad Hollow Rd.
Melville NY 11747

Schedule Year	2017 through 2018
Date Requested	05/16/2018
PRC#	2018005520

Location	Riverhead Sewer District
Project ID#	RDSD 1801
Project Type	Relocation of existing gravity sewer at 841 Old Country Road property

Notice of Contract Award

New York State Labor Law, Article 8, Section 220.3a requires that certain information regarding the awarding of public work contracts, be furnished to the Commissioner of Labor. One "Notice of Contract Award" (PW 16, which may be photocopied), **MUST** be completed for **EACH** prime contractor on the above referenced project.

Upon notifying the successful bidder(s) of this contract, enter the required information and mail **OR** fax this form to the office shown at the bottom of this notice, **OR** fill out the electronic version via the NYSDOL website.

Contractor Information

All information must be supplied

Federal Employer Identification Number: _____

Name: _____

Address: _____

_____

City: _____ State: _____ Zip: _____

Amount of Contract: $_____

Approximate Starting Date: ____/____/____

Approximate Completion Date: ____/____/____

Contract Type:

[ ] (01) General Construction
[ ] (02) Heating/Ventilation
[ ] (03) Electrical
[ ] (04) Plumbing
[ ] (05) Other : _____

Phone: (518) 457-5589 Fax: (518) 485-1870
W. Averell Harriman State Office Campus, Bldg. 12, Room 130, Albany, NY 12240

IMPORTANT NOTICE

FOR

CONTRACTORS & CONTRACTING AGENCIES

Social Security Numbers on Certified Payrolls

The Department of Labor is cognizant of the concerns of the potential for misuse or inadvertent disclosure of social security numbers. Identity theft is a growing problem and we are sympathetic to contractors' concerns with regard to inclusion of this information on payrolls if another identifier will suffice.

For these reasons, ***the substitution of the use of the last four digits of the social security number on certified payrolls submitted to contracting agencies on public work projects is now acceptable to the Department of Labor.***

NOTE: This change does not affect the Department's ability to request and receive the entire social security number from employers during the course of its public work / prevailing wage investigations.

To all State Departments, Agency Heads and Public Benefit Corporations
IMPORTANT NOTICE REGARDING PUBLIC WORK ENFORCEMENT FUND

Budget Policy & Reporting Manual

B-610

Public Work Enforcement Fund

effective date December 7, 2005

---

1. Purpose and Scope:

This Item describes the Public Work Enforcement Fund (the Fund, PWEF) and its relevance to State agencies and public benefit corporations engaged in construction or reconstruction contracts, maintenance and repair, and announces the recently-enacted increase to the percentage of the dollar value of such contracts that must be deposited into the Fund. This item also describes the roles of the following entities with respect to the Fund:

- New York State Department of Labor (DOL),
- The Office of the State of Comptroller (OSC), and
- State agencies and public benefit corporations.

2. Background and Statutory References:

DOL uses the Fund to enforce the State's Labor Law as it relates to contracts for construction or reconstruction, maintenance and repair, as defined in subdivision two of Section 220 of the Labor Law. State agencies and public benefit corporations participating in such contracts are required to make payments to the Fund.

Chapter 511 of the Laws of 1995 (as amended by Chapter 513 of the Laws of 1997, Chapter 655 of the Laws of 1999, Chapter 376 of the Laws of 2003 and Chapter 407 of the Laws of 2005) established the Fund.

3. Procedures and Agency Responsibilities:

The Fund is supported by transfers and deposits based on the value of contracts for construction and reconstruction, maintenance and repair, as defined in subdivision two of Section 220 of the Labor Law, into which all State agencies and public benefit corporations enter.

Chapter 407 of the Laws of 2005 increased the amount required to be provided to this fund to .10 of one-percent of the total cost of each such contract, to be calculated at the time agencies or public benefit corporations enter into a new contract or if a contract is amended. The provisions of this bill became effective August 2, 2005.

To all State Departments, Agency Heads and Public Benefit Corporations
IMPORTANT NOTICE REGARDING PUBLIC WORK ENFORCEMENT FUND

OSC will report to DOL on all construction-related ("D") contracts approved during the month, including contract amendments, and then DOL will bill agencies the appropriate assessment monthly. An agency may then make a determination if any of the billed contracts are exempt and so note on the bill submitted back to DOL. For any instance where an agency is unsure if a contract is or is not exempt, they can call the Bureau of Public Work at the number noted below for a determination. Payment by check or journal voucher is due to DOL within thirty days from the date of the billing. DOL will verify the amounts and forward them to OSC for processing.

For those contracts which are not approved or administered by the Comptroller, monthly reports and payments for deposit into the Public Work Enforcement Fund must be provided to the Administrative Finance Bureau at the DOL within 30 days of the end of each month or on a payment schedule mutually agreed upon with DOL.

Reports should contain the following information:

- Name and billing address of State agency or public benefit corporation;
- State agency or public benefit corporation contact and phone number;
- Name and address of contractor receiving the award;
- Contract number and effective dates;
- Contract amount and PWEF assessment charge (if contract amount has been amended, reflect increase or decrease to original contract and the adjustment in the PWEF charge); and
- Brief description of the work to be performed under each contract.

Checks and Journal Vouchers, payable to the "New York State Department of Labor" should be sent to:

Department of Labor
Administrative Finance Bureau-PWEF Unit
Building 12, Room 464
State Office Campus
Albany, NY 12240

Any questions regarding billing should be directed to NYSDOL's Administrative Finance Bureau-PWEF Unit at (518) 457-3624 and any questions regarding Public Work Contracts should be directed to the Bureau of Public Work at (518) 457-5589.

Construction Industry
Fair Play Act

Required Posting For Labor Law
Article 25-B § 861-d

Construction industry employers must post the "Construction Industry Fair Play Act" notice in a prominent and accessible place on the job site.

Failure to post the notice can result in penalties of up to $1,500 for a first offense and up to $5,000 for a second offense.

The posting is included as part of this wage schedule. Additional copies may be obtained from the NYS DOL website, www.labor.ny.gov.

If you have any questions concerning the Fair Play Act, please call the State Labor Department toll-free at 1-866-435-1499 or email us at: dol.misclassified@labor.state.ny.us .

New York State Department of Labor
Required Notice under Article 25-B of the Labor Law

ATTENTION ALL EMPLOYEES, CONTRACTORS AND SUBCONTRACTORS:
YOU ARE COVERED BY THE
CONSTRUCTION INDUSTRY FAIR PLAY ACT

The law says that you are an employee unless:

- You are free from direction and control in performing your job AND
- You perform work that is not part of the usual work done by the business that hired you AND
- You have an independently established business

Your employer cannot consider you to be an independent contractor unless all three of these facts apply to your work.

IT IS AGAINST THE LAW FOR AN EMPLOYER TO MISCLASSIFY EMPLOYEES AS INDEPENDENT CONTRACTORS OR PAY EMPLOYEES OFF-THE-BOOKS.

Employee rights. If you are an employee:

- You are entitled to state and federal worker protections such as
  - unemployment benefits, if unemployed through no fault of your own, able to work, and otherwise qualified
  - workers' compensation benefits for on-the-job injuries
  - payment for wages earned, minimum wage, and overtime (under certain conditions)
  - prevailing wages on public work projects
  - the provisions of the National Labor Relations Act and
  - a safe work environment
- It is a violation of this law for employers to retaliate against anyone who asserts their rights under the law. Retaliation subjects an employer to civil penalties, a private lawsuit or both.

Independent Contractors: If you are an independent contractor*:*

- You must pay all taxes required by New York State and Federal Law.

Penalties for paying off-the-books or improperly treating employees as independent contractors:

- **Civil Penalty** — First Offense: up to $2,500 per employee.
  Subsequent Offense(s): up to $5,000 per employee.

- **Criminal Penalty** — First Offense: Misdemeanor - up to 30 days in jail, up to a $25,000 fine and debarment from performing Public Work for up to one year.
  Subsequent Offense(s): Misdemeanor - up to 60 days in jail, up to a $50,000 fine and debarment from performing Public Work for up to 5 years.

If you have questions about your employment status or believe that your employer may have violated your rights and you want to file a complaint, call the Department of Labor at 1(866)435-1499 or send an email to dol.misclassified@labor.state.ny.us. All complaints of fraud and violations are taken seriously and you can remain anonymous.

Employer Name:

IA 999 (09/10)

WORKER NOTIFICATION

(Labor Law §220, paragraph a of subdivision 3-a)

Effective February 24, 2008

This provision is an addition to the existing prevailing wage rate law, Labor Law §220, paragraph a of subdivision 3-a. It requires contractors and subcontractors to provide written notice to all laborers, workers or mechanics of the *prevailing wage rate* for their particular job classification *on each pay stub**. It also requires contractors and subcontractors to *post a notice* at the beginning of the performance of every public work contract *on each job site* that includes the telephone number and address for the Department of Labor and a statement informing laborers, workers or mechanics of their right to contact the Department of Labor if he/she is not receiving the proper prevailing rate of wages and/or supplements for his/her particular job classification. The required notification will be provided with each wage schedule, may be downloaded from our website *www.labor.state.ny.us* or made available upon request by contacting the Bureau of Public Work at 518-457-5589.

* In the event that the required information will not fit on the pay stub, an accompanying sheet or attachment of the information will suffice.

(11.11)

New York State Department of Labor
Bureau of Public Work

Attention Employees

THIS IS A:

PUBLIC WORK PROJECT

If you are employed on this project as a **worker, laborer, or mechanic** you are entitled to receive the **prevailing wage and supplements rate** for the classification at which you are working.

Chapter 629 of the Labor Laws of 2007:

These wages are set by law and must be posted at the work site. They can also be found at: www.labor.ny.gov

If you feel that you have not received proper wages or benefits, please call our nearest office.*

Albany	(518) 457-2744	Patchogue	(631) 687-4882
Binghamton	(607) 721-8005	Rochester	(585) 258-4505
Buffalo	(716) 847-7159	Syracuse	(315) 428-4056
Garden City	(516) 228-3915	Utica	(315) 793-2314
New York City	(212) 932-2419	White Plains	(914) 997-9507
Newburgh	(845) 568-5156		

* For New York City government agency construction projects, please contact the Office of the NYC Comptroller at (212) 669-4443, or www.comptroller.nyc.gov – click on Bureau of Labor Law.

Contractor Name: _____

Project Location: _____

OSHA 10-hour Construction

Safety and Health Course – S1537-A

Effective July 18, 2008

This provision is an addition to the existing prevailing wage rate law, Labor Law §220, section 220-h. It requires that on all public work projects of at least $250,000.00, all laborers, workers and mechanics working on the site, be certified as having successfully completed the OSHA 10-hour construction safety and health course. It further requires that the advertised bids and contracts for every public work contract of at least $250,000.00, contain a provision of this requirement.

NOTE: ***The OSHA 10 Legislation only applies to workers on a public work project that are required, under Article 8, to receive the prevailing wage.***

Where to find OSHA 10-hour Construction Course

1. NYS Department of Labor website for scheduled outreach training at:

   www.labor.state.ny.us/workerprotection/safetyhealth/DOSH_ONSITE_CONSULTATION.shtm

2. OSHA Training Institute Education Centers:

   Rochester Institute of Technology OSHA Education Center
   Rochester, NY
   Donna Winter
   Fax (585) 475-6292
   e-mail: dlwtpo@rit.edu
   (866) 385-7470 Ext. 2919
   www.rit.edu/~outreach/course.php3?CourseID=54

   Atlantic OSHA Training Center
   UMDNJ – School of Public Health
   Piscataway, NJ
   Janet Crooks
   Fax (732) 235-9460
   e-mail: crooksje@umdnj.edu
   (732) 235-9455
   https://ophp.umdnj.edu/wconnect/ShowSchedule.awp?~~GROUP~AOTCON~10~

   Atlantic OSHA Training Center
   University at Buffalo
   Buffalo, New York
   Joe Syracuse
   Fax (716) 829-2806
   e-mail:mailto:japs@buffalo.edu
   (716) 829-2125
   http://www.smbs.buffalo.edu/CENTERS/trc/schedule_OSHA.php

   Keene State College
   Manchester, NH
   Leslie Singleton
   e-mail: lsingletin@keene.edu
   (800) 449-6742
   www.keene.edu/courses/print/courses_osha.cfm

3. List of trainers and training schedules for OSHA outreach training at:

   www.OutreachTrainers.org

Requirements for OSHA 10 Compliance

Chapter 282 of the Laws of 2007, codified as Labor Law 220-h took effect on July 18, 2008. The statute provides as follows:

The advertised specifications for every contract for public work of $250,000.00 or more must contain a provision requiring that every worker employed in the performance of a public work contract shall be certified as having completed an OSHA 10 safety training course. The clear intent of this provision is to require that all employees of public work contractors, required to be paid prevailing rates, receive such training "prior to the performing any work on the project."

The Bureau will enforce the statute as follows:

All contractors and sub contractors must attach a copy of proof of completion of the OSHA 10 course to the first certified payroll submitted to the contracting agency and on each succeeding payroll where any new or additional employee is first listed.

Proof of completion may include but is not limited to:

- Copies of bona fide course completion card (*Note: Completion cards do not have an expiration date.*)
- Training roster, attendance record of other documentation from the certified trainer pending the issuance of the card.
- Other valid proof

**A certification by the employer attesting that all employees have completed such a course is not sufficient proof that the course has been completed.

Any questions regarding this statute may be directed to the New York State Department of Labor, Bureau of Public Work at 518-485-5696.

WICKS Reform 2008

(For all contracts advertised or solicited for bid on or after 7/1/08)

- Raises the threshold for public work projects subject to the Wicks Law requiring separate specifications and bidding for the plumbing, heating and electrical work. The total project's threshold would increase from $50,000 to: $3 million in Bronx, Kings, New York, Queens and Richmond counties; $1.5 million in Nassau, Suffolk and Westchester counties; and $500,000 in all other counties.

- For projects below the monetary threshold, bidders must submit a sealed list naming each subcontractor for the plumbing, HVAC and electrical work and the amount to be paid to each. The list may not be changed unless the public owner finds a legitimate construction need, including a change in specifications or costs or use of a Project Labor Agreement (PLA), and must be open to public inspection.

- Allows the state and local agencies and authorities to waive the Wicks Law and use a PLA if it will provide the best work at the lowest possible price. If a PLA is used, all contractors shall participate in apprentice training programs in the trades of work it employs that have been approved by the Department of Labor (DOL) for not less than three years. They shall also have at least one graduate in the last three years and use affirmative efforts to retain minority apprentices. PLA's would be exempt from Wicks, but deemed to be public work subject to prevailing wage enforcement.

- The Commissioner of Labor shall have the power to enforce separate specification requirements on projects, and may issue stop-bid orders against public owners for non-compliance.

- Other new monetary thresholds, and similar sealed bidding for non-Wicks projects, would apply to certain public authorities including municipal housing authorities, NYC Construction Fund, Yonkers Educational Construction Fund, NYC Municipal Water Finance Authority, Buffalo Municipal Water Finance Authority, Westchester County Health Care Association, Nassau County Health Care Corp., Clifton-Fine Health Care Corp., Erie County Medical Center Corp., NYC Solid Waste Management Facilities, and the Dormitory Authority.

- Reduces from 15 to 7 days the period in which contractors must pay subcontractors.

IMPORTANT INFORMATION

Regarding Use of Form PW30.1
(Previously 30R)

"Employer Registration for Use of 4 Day / 10 Hour Work Schedule"

To use the '4 Day / 10 Hour Work Schedule':

There MUST be a *Dispensation of Hours (PW30)* in place on the project

AND

You MUST register your intent to work 4 / 10 hour days, by completing the PW30.1 Form.

REMEMBER…

The '4 Day / 10 Hour Work Schedule' applies ONLY to Job Classifications and Counties listed on the PW30.1 Form.

Do not write in any additional Classifications or Counties.

(**Please note** : For each Job Classification check the individual wage schedule for specific details regarding their 4/10 hour day posting.)

Instructions for Completing Form PW30.1

(Previously 30R)

"Employer Registration for Use of 4 Day / 10 Hour Work Schedule"

Before completing Form PW30.1 check to be sure …

- There is a *Dispensation of Hours* in place on the project.
- The 4 Day / 10 Hour Work Schedule applies to the Job Classifications you will be using.
- The 4 Day / 10 Hour Work Schedule applies to the County / Counties where the work will take place.

Instructions (Type or Print legibly):

Contractor Information:

- Enter the Legal Name of the business, FEIN, Street Address, City, State, Zip Code; the Company's Phone and Fax numbers; and the Company's email address (if applicable)
- Enter the Name of a Contact Person for the Company along with their Phone and Fax numbers, and the personal email address (if applicable)

Project Information:

- Enter the Prevailing Rate Case number (PRC#) assigned to this project
- Enter the Project Name / Type (i.e. Smithtown CSD – Replacement of HS Roof)
- Enter the Exact Location of Project (i.e. Smithtown HS, 143 County Route #2, Smithtown,NY; Bldgs. 1 & 2)
- If you are a Subcontractor, enter the name of the Prime Contractor for which you work
- On the Checklist of Job Classifications -
  - Go to pages 2 and 3 of the form
  - Place a checkmark in the box to the right of the Job Classification you are choosing
  - Mark all Job Classifications that apply

    ****Do not write in any additional Classifications or Counties.****

Requestor Information:

- Enter the name of the person submitting the registration, their title with the company , and the date the registration is filled out

Return Completed Form:

- **Mail** the completed PW30.1 form to: NYSDOL Bureau of Public Work, SOBC – Bldg.12 – Rm.130, Albany, NY 12240 -***OR -***
- **Fax** the completed PW30.1 form to: NYSDOL Bureau of Public Work at (518)485-1870

Bureau of Public Work Harriman
State Office Campus
Building 12, Room 130
Albany, New York 12240
Phone: (518) 457-5589 | Fax: (518) 485-1870
www.labor.ny.gov

Employer Registration for Use of 4 Day / 10 Hour Work Schedule

Before completing this form, make sure that:

- There is a **Dispensation of Hours** in place on the project.
- The 4 Day / 10 Hour Work Schedule applies to the Job Classifications you will be using.
- The 4 Day / 10 Hour Work Schedule applies to the County / Counties where the work will take place.

Please **type or print** the requested information and then **mail or fax** to the address above.

Contractor Information

Company Name:_____ FEIN: _____

Address: _____

City:_____State: _____ Zip Code: _____

Phone No:_____ Fax No:_____ Email: _____

Contact Person: _____

Phone No:_____Fax No:_____ Email: _____

Project Information

Project PRC#: _____ Project Name/Type: _____

Exact Location
of Project: _____ County: _____

(If you are Subcontractor)
Prime Contractor Name: _____

Job Classification(s) to Work 4/10 Schedule: *(Choose all that apply on Job Classification Checklist - Pages 3-8)*
**** Do not write in any additional Classifications or Counties****

Requestor Information

Name: _____

Title: _____ Date: _____

Please use the list below with the number assigned to each county as a reference to the corresponding numbers listed in the following pages under **Entire Counties** & **Partial Counties**.

1. Albany County
2. Allegany County
3. Bronx County
4. Broome County
5. Cattaraugus County
6. Cayuga County
7. Chautauqua County
8. Chemung County
9. Chenango County
10. Clinton County
11. Columbia County
12. Cortland County
13. Delaware County
14. Dutchess County
15. Erie County
16. Essex County
17. Franklin County
18. Fulton County
19. Genesee County
20. Greene County
21. Hamilton County
22. Herkimer County
23. Jefferson County
24. Kings County (Brooklyn)
25. Lewis County
26. Livingston County
27. Madison County
28. Monroe County
29. Montgomery County
30. Nassau County
31. New York County (Manhattan)
32. Niagara County
33. Oneida County
34. Onondaga County
35. Ontario County
36. Orange County
37. Orleans County
38. Oswego County
39. Otsego County
40. Putnam County
41. Queens County
42. Rensselaer County
43. Richmond County (Staten Island)
44. Rockland County
45. Saint Lawrence County
46. Saratoga County
47. Schenectady County
48. Schoharie County
49. Schuyler County
50. Seneca County
51. Steuben County
52. Suffolk County
53. Sullivan County
54. Tioga County
55. Tompkins County
56. Ulster County
57. Warren County
58. Washington County
59. Wayne County
60. Westchester County
61. Wyoming County
62. Yates County

Job Classification Checklist

(Place a checkmark by all classifications that will be using the 4/10 schedule)

**** Do not write in any additional Classifications or Counties****

Job Classification	Tag #	Entire Counties	Partial Counties	Check Box
Carpenter – Building	276B-All	7	2 ,5	
Carpenter – Building	276B-Cat	15	5	
Carpenter – Building	276-B-LIV	26, 28, 35, 59	61	
Carpenter – Building	276B-Gen	19, 32, 37	61	
Carpenter – Heavy & Highway	276HH-All	2, 5, 7		
Carpenter – Heavy & Highway	276HH-Erie	15		
Carpenter – Heavy & Highway	276HH- Gen	19, 32, 37, 61		
Carpenter – Heavy & Highway	276HH-Liv	26, 28, 35, 59		
Carpenter – Residential	276R-All	7	2, 5	
Carpenter – Building	277B-Bro	4, 54		
Carpenter – Building	277B-CAY	6, 50, 62		
Carpenter – Building	277B-CS	8, 12, 49, 51, 55	2	
Carpenter – Building	277 JLS	23, 25, 45		
Carpenter – Building	277 omh	22, 27, 33		
Carpenter – Building	277 On	34		
Carpenter – Building	277 Os	38		
Carpenter – Building	277CDO Bldg	9, 13, 39		
Carpenter – Heavy & Highway	277CDO HH	9, 13, 39		
Carpenter – Heavy & Highway	277HH-BRO	4, 6, 8, 12, ,22, 23, 25, 27, 33, 34, 38, 45, 49, 50, 51, 54, 55, 62		
Carpenter – Building	291B-Alb	1, 18, 20, 29, 42, 47, 48		
Carpenter – Building	291B-Cli	10, 16, 17		
Carpenter – Building	291B-Ham	21, 57, 58		
Carpenter – Building	291B-Sar	46		
Carpenter – Heavy & Highway	291HH-Alb	1, 10, 16, 17,18, 20, 21, 29, 42, 46, 47, 48, 57, 58		
Electrician	25m	30, 52		
Electrician – Teledata Cable Splicer	43	12, 22, 27, 33, 38	6, 9, 34, 39, 55, 59	

Job Classification Checklist

(Place a checkmark by all classifications that will be using the 4/10 schedule)

**** Do not write in any additional Classifications or Counties****

Job Classification	Tag #	Entire Counties	Partial Counties	Check Box
Electrician	86	26, 28	19, 35, 37, 59, 61	
Electrician	840 Teledata and 840 Z1	62	6, 34, 35, 50, 59	
Electrician	910	10, 16, 17, 23, 25, 45		
Electrical Lineman	1049Line/Gas	30, 41, 52		
Electrical Lineman	1249a	1, 2, 4, 5, 6, 7, 8, 9, 10, 11, 12, 13, 14, 15, 16, 17, 18, 19, 20, 21, 22, 23, 25, 26, 27, 28, 29, 32, 33, 34, 35, 36, 37, 38, 39, 40, 42, 44, 46, 47, 48, 49, 50, 45, 51, 53, 54, 55, 56, 57, 58, 59, 61, 62		
Electrical Lineman	1249a West	60		
Electrical Lineman	1249a-LT	1, 2, 4, 5, 6, 7, 8, 9, 10, 12, 13, 15, 16, 17, 18, 19, 20, 21, 22, 23, 25, 26, 27, 28, 29, 32, 33, 34, 35, 37, 38, 39, 42, 46, 47, 48, 49, 50, 45, 51, 53, 54, 55, 57, 58, 59, 61, 62		
Electrical Lineman	1249aREG8LT	11, 14, 36, 40, 44, 56		
Electrical Lineman	1249aWestLT	60		
Elevator Constructor	138	11, 14, 20, 36, 40, 53, 56	13, 44, 60	
Elevator Constructor	14	2, 5, 7, 15, 19, 32, 37, 61		
Elevator Constructor	27	8, 26, 28, 35, 49, 50, 51, 59, 62		
Elevator Constructor	35	1, 10, 16, 18, 21, 22, 29, 39, 42, 46, 47, 48, 57, 58		
Elevator Constructor	62.1	4, 6, 9, 12, 23, 25, 27, 33, 34, 38, 45, 54, 55	13	
Glazier	201	1, 10, 11, 16, 17, 18, 20, 21, 29, 42, 46, 47, 48, 57, 58		
Glazier	660r	2, 5, 7, 15, 19, 32, 37, 61		
Glazier	660	2, 5, 7, 15, 19, 32, 37, 61		
Glazier	677.1	23, 25, 26, 28, 35, 45, 50, 59, 62		
Glazier	677Z-2	6, 12, 22, 27, 33, 34, 38		
Glazier	677z3	4, 8, 9, 13, 39, 49, 51, 54, 55		
Glazier	677r.2	6, 12, 22, 27, 33, 34, 38		
Insulator – Heat & Frost	30-Syracuse	4, 6, 8, 9, 12, 22, 23, 25, 27, 33, 34, 38, 39, 49, 50, 45, 54, 55		
Laborer – Building	621b	2, 7	5	
Laborer – Building	633 bON	34		

Job Classification Checklist

(Place a checkmark by all classifications that will be using the 4/10 schedule)

**** Do not write in any additional Classifications or Counties****

Job Classification	Tag #	Entire Counties	Partial Counties	Check Box
Laborer – Building	633b Cay	6		
Laborer – Building	633bOS	38		
Laborer – Building	785(7)	4	9, 13, 54	
Laborer – Building	785B-CS	8, 51	49	
Laborer – Building	7-785b	12, 55	49, 54	
Laborers – Heavy & Highway	157h/h	47	18, 29, 46	
Laborers – Heavy & Highway	190 h/h	1, 42, 58	11, 20, 46	
Laborers – Heavy & Highway	35/2h	21, 22, 27, 33	18, 29	
Laborer – Residential	621r	2, 7	5	
Laborers – Tunnel	157	47	18, 29, 46	
Laborers – Tunnel	35T	21, 22, 27, 33	18, 29	
Laborers – Tunnel	190	1, 42, 58	11, 20, 46	
Mason – Building	2TS.1	1, 10,11, 16, 17, 18, 20, 21, 29, 42, 46, 47, 48, 57, 58		
Mason – Building	2TS.2	22, 23, 25, 33, 45	27	
Mason – Building	2TS.3	6, 34, 38	27	
Mason – Building	2b-on	34		
Mason – Building	2b.1	1, 11, 18, 20, 21, 29, 42, 46, 47, 48, 58	57	
Mason – Building	2b.2	22, 33	25	
Mason – Building	2b.3	6, 34	27	
Mason – Building	2b.4	38		
Mason – Building	2b.5	23	25	
Mason – Building	2b.6	45		
Mason – Building	2b.8	10, 16, 17	57	
Mason – Building	3b-Co-Z2	8, 49, 51	2	
Mason – Building	3B-Z1	19, 26, 28, 35, 50, 59, 61, 62		
Mason – Building – Residential	3B-Z1R	19, 26, 28, 35, 50, 59, 61, 62		
Mason – Building	3B-Bing-Z2	4, 9, 13, 39, 54		
Mason – Building	3B-Ith-Z2	12, 55		

Job Classification Checklist

(Place a checkmark by all classifications that will be using the 4/10 schedule)

**** Do not write in any additional Classifications or Counties****

Job Classification	Tag #	Entire Counties	Partial Counties	Check Box
Mason – Building	3B-Jam-Z2	7	2, 5	
Mason – Building – Residential	3B-Jam-Z2R	2, 4, 8, 7, 9, 12, 39, 13, 49, 51, 54, 55	5	
Mason – Building	3B-Z3	15, 32	5	
Mason – Building	3B-Z3.Orleans	37		
Mason – Residential	3B-Z3R	15, 32	5	
Mason – Residential	3B-z3R.Orleans	37		
Mason - Heavy & Highway	3h	2, 4, 8, 7, 9, 12, 13, 19, 26, 28, 35, 37, 39, 49, 50, 51, 54, 55, 59, 61, 62	5, 15, 32	
Mason – Tile Finisher	3TF-Z1	19, 26, 28, 35, 50, 59, 61, 62		
Mason – Tile Finisher	3TF-Z2	2, 4, 8, 7, 9, 12, 13, 39, 49, 51, 54, 55	5	
Mason – Tile Finisher	3TF-Z3	15, 32, 37	5	
Mason – Tile Finisher	3TF-Z1R	19, 26, 28, 35, 50, 59, 61, 62		
Mason – Tile Finisher	3TF-Z2R	2, 4, 7, 9, 12, 13, 39, 49, 51, 54, 55	5	
Mason – Tile Finisher	3TF-Z3R	15, 32, 37	5	
Mason – Tile Setter	3TS-Z1	19, 26, 28, 35, 50, 59, 61, 62		
Mason – Tile Setter Residential	3TS-Z1R	19, 26, 28, 35, 50, 59, 61, 62		
Mason – Tile Setter	3TS-Z2	2, 4, 7, 8, 9, 12, 13, 39, 49, 51, 54, 55	5	
Mason – Tile Setter Residential	3TS-Z2R	2, 4, 7, 8, 9, 12, 13, 39, 49, 51, 54, 55	5	
Mason – Tile Setter	3TS-Z3	15, 32, 37	5	
Mason – Tile Setter Residential	3TS-Z3R	15, 32, 37	5	
Mason – Building/Heavy & Highway	780	3, 24, 30, 31, 41, 43, 52		
Operating Engineer - Heavy & Highway	137H/H	40, 60	14	
Operating Engineer – Heavy & Highway	158-832H	2, 8, 26, 28, 35, 49, 51, 59, 62	19	
Operating Engineer – Heavy & Highway	158-H/H	1, 4, 9, 10, 11, 14, 16, 17, 18, 20, 21, 22, 29, 39, 42, 46, 47, 48, 54, 57, 58		
Operating Engineer – Heavy & Highway	158-545h	6, 12, 23, 25, 27, 33, 38, 45, 50, 55		
Painter	1456-LS	1, 3, 10, 11, 14, 16, 17, 18, 20, 21, 24, 29, 30, 31, 36, 40, 41, 42, 43, 44, 46, 47, 48, 52, 53, 56, 57, 58, 60		
Painter	150	28, 59, 62	26, 35	

Job Classification Checklist

(Place a checkmark by all classifications that will be using the 4/10 schedule)

**** Do not write in any additional Classifications or Counties****

Job Classification	Tag #	Entire Counties	Partial Counties	Check Box
Painter	178 B	4, 9, 54		
Painter	178 E	8, 49	51	
Painter	178 I	12, 55		
Painter	178 O	13, 39		
Painter	31	6, 22, 27, 33, 34, 50	25, 35, 38	
Painter	38.O		38	
Painter	38.W	23, 45	25	
Painter	4-Buf,Nia,Olean	2, 15, 19, 32, 37, 61	5, 7, 26, 51	
Painter	4-Jamestown		5, 7	
Sheetmetal Worker	46	26, 28, 35, 50, 59, 62		
Sheetmetal Worker	46r	26, 28, 35, 50, 59, 62		
Teamsters – Heavy & Highway	294h/h	1, 11, 18, 20, 29, 42, 46, 47, 48, 58	57	
Teamsters – Heavy & Highway	317bhh	6, 12, 50, 51, 55, 62	2	
Teamsters - Building/Heavy & Highway	456	40, 60		

Introduction to the Prevailing Rate Schedule

Information About Prevailing Rate Schedule

This information is provided to assist you in the interpretation of particular requirements for each classification of worker contained in the attached Schedule of Prevailing Rates.

Classification

It is the duty of the Commissioner of Labor to make the proper classification of workers taking into account whether the work is heavy and highway, building, sewer and water, tunnel work, or residential, and to make a determination of wages and supplements to be paid or provided. It is the responsibility of the public work contractor to use the proper rate. If there is a question on the proper classification to be used, please call the district office located nearest the project. District office locations and phone numbers are listed below.

Prevailing Wage Schedules are issued separately for "General Construction Projects" and "Residential Construction Projects" on a county-by-county basis.

General Construction Rates apply to projects such as: Buildings, Heavy & Highway, and Tunnel and Water & Sewer rates.

Residential Construction Rates generally apply to construction, reconstruction, repair, alteration, or demolition of one family, two family, row housing, or rental type units intended for residential use.

Some rates listed in the Residential Construction Rate Schedule have a very limited applicability listed along with the rate. Rates for occupations or locations not shown on the residential schedule must be obtained from the General Construction Rate Schedule. Please contact the local Bureau of Public Work office before using Residential Rate Schedules, to ensure that the project meets the required criteria.

Paid Holidays

Paid Holidays are days for which an eligible employee receives a regular day's pay, but is not required to perform work. If an employee works on a day listed as a paid holiday, this remuneration is in addition to payment of the required prevailing rate for the work actually performed.

Overtime

At a minimum, all work performed on a public work project in excess of eight hours in any one day or more than five days in any workweek is overtime. However, the specific overtime requirements for each trade or occupation on a public work project may differ. Specific overtime requirements for each trade or occupation are contained in the prevailing rate schedules.

Overtime holiday pay is the premium pay that is required for work performed on specified holidays. It is only required where the employee actually performs work on such holidays.

The applicable holidays are listed under HOLIDAYS: OVERTIME. The required rate of pay for these covered holidays can be found in the OVERTIME PAY section listings for each classification.

Supplemental Benefits

Particular attention should be given to the supplemental benefit requirements. In most cases the payment or provision of supplements is for each hour worked (noted in the schedule as 'Per hour worked'). Some classifications require the payment or provision of supplements for each hour paid (noted in the schedule as 'Per hour paid'), which require supplements to be paid or provided at a premium rate for premium hours worked. Some classifications may also require the payment or provision of supplements for paid holidays on which no work is performed.

Effective Dates

When you review the schedule for a particular occupation, your attention should be directed to the dates above the column of rates. These are the dates for which a given set of rates is effective. The rate listed is valid until the next effective rate change or until the new annual determination which takes effect on July 1 of each year. All contractors and subcontractors are required to pay the current prevailing rates of wages and supplements. If you have any questions please contact the Bureau of Public Work or visit the New York State Department of Labor website (www.labor.state.ny.us) for current wage rate information.

Apprentice Training Ratios

The following are the allowable ratios of registered Apprentices to Journey-workers.

For example, the ratio 1:1,1:3 indicates the allowable initial ratio is one Apprentice to one Journeyworker. The Journeyworker must be in place on the project before an Apprentice is allowed. Then three additional Journeyworkers are needed before a second Apprentice is allowed. The last ratio repeats indefinitely. Therefore, three more Journeyworkers must be present before a third Apprentice can be hired, and so on.

Please call Apprentice Training Central Office at (518) 457-6820 if you have any questions.

Title (Trade)	Ratio
Boilermaker (Construction)	1:1,1:4
Boilermaker (Shop)	1:1,1:3
Carpenter (Bldg.,H&H, Pile Driver/Dockbuilder)	1:1,1:4
Carpenter (Residential)	1:1,1:3

Electrical (Outside) Lineman	1:1,1:2
Electrician (Inside)	1:1,1:3
Elevator/Escalator Construction & Modernizer	1:1,1:2
Glazier	1:1,1:3
Insulation & Asbestos Worker	1:1,1:3
Iron Worker	1:1,1:4
Laborer	1:1,1:3
Mason	1:1,1:4
Millwright	1:1,1:4
Op Engineer	1:1,1:5
Painter	1:1,1:3
Plumber & Steamfitter	1:1,1:3
Roofer	1:1,1:2
Sheet Metal Worker	1:1,1:3
Sprinkler Fitter	1:1,1:2

If you have any questions concerning the attached schedule or would like additional information, please contact the nearest BUREAU of PUBLIC WORK District Office or write to:

New York State Department of Labor
Bureau of Public Work
State Office Campus, Bldg. 12
Albany, NY 12240

District Office Locations:	Telephone #	FAX #
Bureau of Public Work - Albany	518-457-2744	518-485-0240
Bureau of Public Work - Binghamton	607-721-8005	607-721-8004
Bureau of Public Work - Buffalo	716-847-7159	716-847-7650
Bureau of Public Work - Garden City	516-228-3915	516-794-3518
Bureau of Public Work - Newburgh	845-568-5287	845-568-5332
Bureau of Public Work - New York City	212-932-2419	212-775-3579
Bureau of Public Work - Patchogue	631-687-4882	631-687-4902
Bureau of Public Work - Rochester	585-258-4505	585-258-4708
Bureau of Public Work - Syracuse	315-428-4056	315-428-4671
Bureau of Public Work - Utica	315-793-2314	315-793-2514
Bureau of Public Work - White Plains	914-997-9507	914-997-9523
Bureau of Public Work - Central Office	518-457-5589	518-485-1870

Suffolk County General Construction

Asbestos Worker 05/01/2018

JOB DESCRIPTION Asbestos Worker **DISTRICT** 4

ENTIRE COUNTIES
Bronx, Kings, Nassau, New York, Queens, Richmond, Suffolk

WAGES

Per Hour:	07/01/2017
Abestos Worker Removal & Abatement Only*	$ 44.00

NOTE: *On Mechanical Systems that are NOT to be SCRAPPED.

SUPPLEMENTAL BENEFITS

Per Hour:	
Abestos Worker Removal & Abatement Only	$ 8.70

OVERTIME PAY
See (B, B2, *E, J) on OVERTIME PAGE
Hours worked on Saturdays are paid at time and one half only if forty hours have been worked during the week.

HOLIDAY
Paid: See (1) on HOLIDAY PAGE
Overtime: See (5, 6, 8) on HOLIDAY PAGE

REGISTERED APPRENTICES
Apprentice Removal & Abatement Only:
1000 hour terms at the following percentage of Journeyman's rates.

1st	2nd	3rd	4th
78%	80%	83%	89%

SUPPLEMENTAL BENEFIT

Per Hour:	
Apprentice Removal & Abatement	$ 8.70

4-12a - Removal Only

Boilermaker 05/01/2018

JOB DESCRIPTION Boilermaker **DISTRICT** 4

ENTIRE COUNTIES
Bronx, Dutchess, Kings, Nassau, New York, Orange, Putnam, Queens, Richmond, Rockland, Suffolk, Sullivan, Ulster, Westchester

WAGES

Per Hour:	07/01/2017	01/01/2018
Boilermaker	$ 55.23	$ 57.17
Repairs & Renovations	$ 55.23	$ 57.17

SUPPLEMENTAL BENEFITS

Per Hour:	07/01/2017	01/01/2018
Boilermaker Repair $ Renovations	32% of hourly Wage Paid + $ 25.27	32% of hourly Wage Paid + $ 25.35

NOTE: "Hourly Wage Paid" shall include any and all premium(s) pay.

Repairs & Renovation Includes replacement of parts and repairs & renovation of existing unit.

OVERTIME PAY
See (D, O) on OVERTIME PAGE
Repairs & Renovation see (B,E,Q)

HOLIDAY

Paid: See (8, 16, 23, 24) on HOLIDAY PAGE
Overtime: See (5, 6, 8, 11, 12, 15, 16, 22, 23, 24, 25) on HOLIDAY PAGE
NOTE: *Employee must work in pay week to receive Holiday Pay.
**Employee gets 4 times the hourly wage rate for working Labor Day.

REGISTERED APPRENTICES
Wage per hour:
(1/2) Year Terms at the following pecentage of Boilermaker's Wage

1st	2nd	3rd	4th	5th	6th	7th
65%	70%	75%	80%	85%	90%	95%

Supplemental Benefits Per Hour:

Apprentice(s)	07/01/2017 32% of Hourly Wage Paid Plus Amount Below	01/01/2018 32% of Hourly Wage Paid Plus Amount Below
1st Term	$ 19.35	$ 19.37
2nd Term	20.20	20.22
3rd Term	21.04	21.06
4th Term	21.89	21.92
5th Term	22.74	22.77
6th Term	23.60	23.62
7th Term	24.43	24.46

NOTE: "Hourly Wage Paid" shall include any and all premium(s)

4-5

Carpenter 05/01/2018

JOB DESCRIPTION Carpenter **DISTRICT** 8

ENTIRE COUNTIES
Bronx, Kings, Nassau, New York, Putnam, Queens, Richmond, Rockland, Suffolk, Westchester

WAGES
Per hour: 07/01/2017

Piledriver	$ 51.63
Dockbuilder	$ 51.63

SUPPLEMENTAL BENEFITS
Per hour worked:

Journeyworker $ 48.62

OVERTIME PAY
See (B, E2, O) on OVERTIME PAGE

HOLIDAY
Paid: See (1) on HOLIDAY PAGE.

Paid: for 1st & 2nd yr.
Apprentices See (5,6,11,13,25)

Overtime: See (5,6,11,13,25) on HOLIDAY PAGE.

REGISTERED APPRENTICES
Wages per hour
(1)year terms:

1st	2nd	3rd	4th
$20.65	$25.82	$33.56	$41.30

Supplemental benefits per hour:

Apprentices $ 32.49

8-1556 Db

Carpenter **05/01/2018**

JOB DESCRIPTION Carpenter **DISTRICT** 8

ENTIRE COUNTIES
Bronx, Kings, Nassau, New York, Queens, Richmond, Rockland, Suffolk, Westchester

WAGES
Per hour: 07/01/2017

Carpet/Resilient
Floor Coverer $ 50.50

INCLUDES HANDLING & INSTALLATION OF ARTIFICIAL TURF AND SIMILAR TURF INDOORS/OUTDOORS.

SUPPLEMENTAL BENEFITS
Per hour worked:
$ 45.85

OVERTIME PAY
See (B, E, Q) on OVERTIME PAGE

HOLIDAY
Paid: See (18, 19) on HOLIDAY PAGE.

Paid for 1st & 2nd yr.
Apprentices See (5,6,11,13,16,18,19,25)
Overtime: See (5,6,11,13,16,18,19,25) on HOLIDAY PAGE.

REGISTERED APPRENTICES
Wage per hour - (1) year terms:

1st	2nd	3rd	4th
$20.20	$25.25	$32.83	$40.40

Supplemental benefits per hour - all apprentice terms:

$ 31.11

8-2287

Carpenter **05/01/2018**

JOB DESCRIPTION Carpenter **DISTRICT** 8

ENTIRE COUNTIES
Bronx, Dutchess, Kings, Nassau, New York, Orange, Putnam, Queens, Richmond, Rockland, Suffolk, Westchester

WAGES
Per Hour: 07/01/2017

Marine Construction:

Marine Diver $ 65.38
Marine Tender 46.44

SUPPLEMENTAL BENEFITS
Per Hour Worked:

Journeyman $ 48.62

OVERTIME PAY
See (B, E, E2, Q) on OVERTIME PAGE

HOLIDAY
Paid: See (18, 19) on HOLIDAY PAGE
Overtime: See (5, 6, 10, 11, 13, 16, 18, 19) on HOLIDAY PAGE

8-1456MC

Carpenter **05/01/2018**

JOB DESCRIPTION Carpenter **DISTRICT** 8

ENTIRE COUNTIES
Bronx, Kings, Nassau, New York, Putnam, Queens, Richmond, Rockland, Suffolk, Westchester

WAGES
Per hour: 07/01/2017

Building
Millwright $ 51.50

SUPPLEMENTAL BENEFITS
Per hour worked:

Millwright $ 52.38

OVERTIME PAY
See (B, E, Q) on OVERTIME PAGE

HOLIDAY
Paid: See (18,19)* on HOLIDAY PAGE.

Overtime See (5,6,8,11,13,18,19,25) on HOLIDAY PAGE.

* Must show up to work

REGISTERED APPRENTICES
Wages per hour:

(1) year terms:

1st.	2nd.	3rd.	4th.
$28.33	$33.48	$38.63	$48.93

Supplemental benefits per hour paid:

(1) year terms:

1st.	2nd.	3rd.	4th.
$34.25	$37.85	$42.10	$48.66

8-740.1

Carpenter 05/01/2018

JOB DESCRIPTION Carpenter **DISTRICT** 8

ENTIRE COUNTIES
Bronx, Kings, Nassau, New York, Queens, Richmond, Suffolk, Westchester

WAGES
Per Hour:
07/01/2017

Timberman $ 46.99

SUPPLEMENTAL BENEFITS
Per Hour Worked:
07/01/2017

$ 48.23

OVERTIME PAY
See (B, E, E2, Q) on OVERTIME PAGE

HOLIDAY
Paid: See (1) on HOLIDAY PAGE.

Paid: for 1st & 2nd yr.
Apprentices See (5,6,11,13,25)

Overtime: See (5,6,11,13,25) on HOLIDAY PAGE.

REGISTERED APPRENTICES
Wages per hour:
(1) year terms:

1st	2nd	3rd	4th
$18.80	$23.50	$30.54	$37.59

Supplemental benefits per hour:

$ 32.30

8-1556 Tm

Carpenter 05/01/2018

JOB DESCRIPTION Carpenter **DISTRICT** 8

ENTIRE COUNTIES
Bronx, Kings, Nassau, New York, Queens, Richmond, Rockland, Westchester

PARTIAL COUNTIES
Orange: South of but including the following, Waterloo Mills, Slate Hill, New Hampton, Goshen, Blooming Grove, Mountainville, east to the Hudson River.
Putnam: South of but including the following, Cold Spring, TompkinsCorner, Mahopac, Croton Falls, east to Connecticut border.
Suffolk: West of Port Jefferson and Patchogue Road to Route 112 to the Atlantic Ocean.

WAGES

Per hour:	07/01/2017	10/17/2017
Core Drilling:		
Driller	$ 38.82	$ 39.69
Driller Helper	30.96	31.62

Note: Hazardous Waste Pay Differential:
For Level C, an additional 10% above wage rate per hour
For Level B, an additional 10% above wage rate per hour
For Level A, an additional 10% above wage rate per hour
Note: When required to work on water: an additional $ 0.50 per hour.

SUPPLEMENTAL BENEFITS

Per hour worked:	07/01/2017	10/17/2017
Driller and Helper	$ 24.66	$ 25.45

OVERTIME PAY
OVERTIME: See (B,E,K*,P,R**) on OVERTIME PAGE.

HOLIDAY
Paid: See (5,6) on HOLIDAY PAGE.
Overtime: * See (5,6) on HOLIDAY PAGE.
** See (8,10,11,13) on HOLIDAY PAGE.

8-1536-CoreDriller

Carpenter - Building / Heavy&Highway 05/01/2018

JOB DESCRIPTION Carpenter - Building / Heavy&Highway **DISTRICT** 4

ENTIRE COUNTIES
Nassau, Suffolk

WAGES

Per Hour:	07/01/2017
Carpenter (Building)	$ 49.02
Carpenter (Heavy Highway)	$ 49.02

"NOTE" ADD 15% to straight time hourly wage for NEW YORK STATE D.O.T. and other GOVERMENTAL MANDATED Off-Shift Work.

SUPPLEMENTAL BENEFITS
Per Hour:

Both Carpenter Categories $ 31.47

OVERTIME PAY
See (B, E, Q) on OVERTIME PAGE

HOLIDAY
Paid: See (1) on HOLIDAY PAGE
Overtime: See (5, 6, 16, 25) on HOLIDAY PAGE

REGISTERED APPRENTICES

One(1) Year Terms at the following:
Per Hour:

1st	2nd	3rd	4th
$ 23.48	$ 27.61	$ 29.68	$ 33.81

Supplemental Benefits
Per Hour:

All Terms: $ 17.95

4-Reg.Council Nass/Suff

Electrician 05/01/2018

JOB DESCRIPTION Electrician **DISTRICT** 4

ENTIRE COUNTIES
Nassau, Suffolk

WAGES

Per Hour:	07/01/2017	04/28/2018
Telephone and Intergrated Tele-Data System Electrician	$ 37.13	$ 37.48

This rate classification applies to ALL Voice, Data & Video work.: Excluding Fire Alarm Systems and Energy Managment Systems (HVAC Controls), in those cases the regular Electrician rate applies. To ensure proper use of this rate please call Nassau Offices at (516)228-3912 or Suffolk Offices at (631)687-4882.

SUPPLEMENTAL BENEFITS
Per Hour:

Tele-Data Electrican	16% of Hourly Wage Paid + $18.02	16% of Hourly Wage Paid + $18.68

NOTE: "Hourly Wage Paid" shall include any and all premium(s) pay

OVERTIME PAY
See (B, E, E2, Q) on OVERTIME PAGE

HOLIDAY
Paid: See (1) on HOLIDAY PAGE
Overtime: See (5, 6, 15, 16, 25) on HOLIDAY PAGE

4-25tela

Electrician 05/01/2018

JOB DESCRIPTION Electrician **DISTRICT** 4

ENTIRE COUNTIES
Nassau, Suffolk

WAGES

Per Hour:	07/01/2017	03/30/2018
Electrician Electrical Maintenance	$ 42.70	$ 43.20
Traffic Signal	$ 43.60	$ 44.10

"PLEASE NOTE"
Applicable to "EXISTING ELECTRICAL SYSTEMS" including, but not limited to TRAFFIC SIGNALS & STREET LIGHTING. Not used for addons.

Four (4), ten (10) hour days may be worked at straight time during a week, Monday thru Thursday, with one-half (1/2) hour allowed for a lunch period.

NOTE - In order to use the '4 Day/10 Hour Work schedule', as your normal schedule, you must submit an 'Employer Registration for Use of 4 Day/10 Hour Work Schedule,' form PW30.1; and there must be a dispensation of hours in place on the project. If the PW30.1 is not submitted you may be liable for overtime payments for work over 8 hours per day.

SUPPLEMENTAL BENEFITS

Per Hour:

Electrician	12% of Hourly Wage Paid + $17.20	12% of Hourly Wage Paid + $17.61

NOTE: "Hourly Wage Paid" shall include any and all premium(s) pay

OVERTIME PAY
See (B, E2, K, P) on OVERTIME PAGE

HOLIDAY
Paid: See (1) on HOLIDAY PAGE
Overtime: See (5, 6, 15, 16, 25) on HOLIDAY PAGE

REGISTERED APPRENTICES
One(1) Year Term(s) at the following Percentage of Journeyman(s) Wage:

1st	2nd	3rd	4th	5th	6th
40%	50%	60%	70%	80%	90%

Supplemental Benefits:

	Apprentices Hired Prior to 04/26/2014	Apprentices Hired After 04/26/2014
	07/01/2017-06/30/2018	07/01/2016-06/30/2018
1st	12% + $9.90	3% + $3.66
2nd	12% + $10.79	8% + $4.20
3rd	12% + $11.70	9% + $5.24
4th	12% + $12.59	10% + $ 7.00
5th	12% + $13.48	11% + $10.95
6th	12% + $13.66	12% + $14.05

NOTE: Percentages are on "Hourly Wage Paid"
NOTE: "Hourly Wage Paid" shall include any and all premium(s) pay

4-25m

Electrician 05/01/2018

JOB DESCRIPTION Electrician **DISTRICT** 4

ENTIRE COUNTIES
Nassau, Suffolk

WAGES

Per Hour:	07/01/2017	04/30/2018
Electrician		
Pump & Tank	$ 41.05	$ 41.65

SUPPLEMENTAL BENEFITS
Per Hour:

Electrician		
Pump & Tank	65.25% of *Wage Paid	65.25% of *Wage Paid

*Wage Paid includes any and all Premiums

OVERTIME PAY
See (B, E, Q) on OVERTIME PAGE

HOLIDAY
Paid: See (1) on HOLIDAY PAGE
Overtime: See (5, 6, 16, 25) on HOLIDAY PAGE

REGISTERED APPRENTICES
1 Year Terms at the Following:

Per Hour:

1st Term	$ 12.32	$ 12.50
2nd Term	$ 14.37	$ 14.58

3rd Term	$ 16.42	$ 16.66
4th Term	$ 18.47	$ 18.74
5th Term	$ 24.63	$ 24.99
6th Term	$ 28.74	$ 29.16

SUPPLEMENTAL BENEFITS

Per Hour:

All Terms	65.25% of *Wage Paid	65.25% of Wage Paid

*Wage Paid includes any and all Premiums

4-25 Pump & Tank

Electrician 05/01/2018

JOB DESCRIPTION Electrician **DISTRICT** 4

ENTIRE COUNTIES
Nassau, Suffolk

WAGES

Per Hour:	07/01/2017	04/28/2018
Electrician/Wireman	$ 51.50	$ 51.75
HVAC Controls	51.50	51.75
Fire Alarms	51.50	51.75

SUPPLEMENTAL BENEFITS

Per Hour:	07/01/2017	04/28/2018
Electrcian/Wireman (all catagories)	16% of Hourly Wage Paid + $24.96	16% of Hourly Wage Paid + $25.26

NOTE: "Hourly Wage Paid" shall include any and all premium[s]

OVERTIME PAY
See (B, E, E2, Q) on OVERTIME PAGE

HOLIDAY
Paid: See (1) on HOLIDAY PAGE
Overtime: See (5, 6, 15, 16, 25) on HOLIDAY PAGE

REGISTERED APPRENTICES
One(1) Year Terms at the following Percetage of Journeyman(s) Wage:

1st	2nd	3rd	4th	5th	6th
35%	35%	40%	45%	60%	75%

Supplemental Benefits Per Hour:

	07/01/2017	04/28/2018
1st	3% + $2.87	3% + $2.87
2nd	8% + $4.84	8% + $4.84
3rd	9% + $6.04	9% + $6.04
4th	10% + $ 8.19	10% + $8.19
5th	13% + $11.03	13% + $11.03
6th	14% + $17.29	14% + $17.29

NOTE: Percentages are on "Hourly Wage Paid"
NOTE: "Hourly Wage Paid" shall include any and all premium(s).

4-25

Electrician 05/01/2018

JOB DESCRIPTION Electrician **DISTRICT** 4

ENTIRE COUNTIES
Nassau, Suffolk

WAGES

Per Hour:	07/01/2017
Tree Trimmer/Remover Line Clearance Specialist	$ 32.72
Groundman*	$19.63

These rates apply to all tree trimming/removal contracts including but not limited to "Electrical Line Clearance"/"Long Island Railroad Right of Ways".

All tree removal for heavy highway or building construction contracts MUST use Heavy Highway Laborer and Operating Engineer classifications.

* Note: Groundman is not to exceed 20% of the total company workforce

SUPPLEMENTAL BENEFITS

Per Hour:	07/01/2017
Tree Trimmer/Remover Line Clearance Specialist and Groundman	19.75% of Hourly Wage Paid + $9.82

NOTE: "Hourly Wage Paid" shall include any and all premium(s) paid

OVERTIME PAY
See (B, E, P, S) on OVERTIME PAGE

HOLIDAY
Paid: See (5, 6, 8, 16, 23, 24, 25, 26) on HOLIDAY PAGE
Overtime: See (5, 6, 8, 16, 23, 24, 25, 26) on HOLIDAY PAGE

4-1049/Tree

Electrician Lineman 05/01/2018

JOB DESCRIPTION Electrician Lineman **DISTRICT** 4

ENTIRE COUNTIES
Nassau, Queens, Suffolk

WAGES
For Utility Distribution & Transmission Line Construction:

Per Hour:	07/01/2017	04/02/2018
Lineman/Splicer	$ 53.85	$ 55.60
Material Man	46.85	48.37
Heavy Equip. Operator	43.08	44.48
Groundman	32.31	33.36
Flagman	24.23	25.02

For Natural Gasline Construction:

Per Hour:	07/01/2017
Journeyman U.G.Mech.	$ 44.08

Four (4), ten (10) hour days may be worked at straight time during a week, Monday thru Thursday.

NOTE - In order to use the '4 Day/10 Hour Work schedule', as your normal schedule, you must submit an 'Employer Registration for Use of 4 Day/10 Hour Work Schedule,' form PW30.1; and there must be a dispensation of hours in place on the project. If the PW30.1 is not submitted you may be liable for overtime payments for work over 8 hours per day.

SUPPLEMENTAL BENEFITS
Per Hour:
Utility Distribution & Transmission Line Construction:

	07/01/2017	04/02/2018
All Classifications	32% of Hourly Wage Paid + $ 11.93	32% of Hourly Wage Paid + $ 12.43

NOTE: "Hourly Wage Paid" shall include any and all premium(s) pay

Natural Gasline Construction:

Per Hour:	07/01/2017
Journeyman U.G.Mech.	26% of Hourly Wage Paid + $11.96

OVERTIME PAY
See (B, E, Q) on OVERTIME PAGE
OVERTIME for Natural Gas Mechanic:(B,G,P)

HOLIDAY
Paid: See (1) on HOLIDAY PAGE
Overtime: See (5, 6, 8, 16, 23, 25, 26) on HOLIDAY PAGE
Same as Above for Natural Gas Mechanic.

REGISTERED APPRENTICES
1000 hour Terms at the following Percentage of Journeyman's Wage.
(Lineman Only)

1st	2nd	3rd	4th	5th	6th	7th
60%	65%	70%	75%	80%	85%	90%

SUPPLEMENTAL BENEFIT:	07/01/2017	04/02/2018
All Terms	31% of Hourly Wage Paid + $11.93	31% of Hourly Wage Paid + $12.43

4-1049 Line/Gas

Elevator Constructor 05/01/2018

JOB DESCRIPTION Elevator Constructor **DISTRICT** 4

ENTIRE COUNTIES
Bronx, Kings, Nassau, New York, Queens, Richmond, Suffolk

PARTIAL COUNTIES
Rockland: Entire County except for the Township of Stony Point
Westchester: Entire County except for the Townships of Bedford, Lewisboro, Cortland, Mt. Kisco, North Salem, Pound Ridge, Somers and Yorktown.

WAGES
Per hour:

	07/01/2017	03/17/2018
Elevator Constructor	$ 62.64	$ 64.48
Modernization & Service/Repair	49.14	50.49

SUPPLEMENTAL BENEFITS
Per Hour:

Elevator Constructor	$ 38.27	$ 39.98
Modernization & Service/Repair	37.25	38.94

OVERTIME PAY
Constructor. See (D, M, T) on OVERTIME PAGE.

Modern./Service See (B, F, S) on OVERTIME PAGE.

HOLIDAY
Paid: See (5, 6, 8, 11, 15, 16, 25) on HOLIDAY PAGE
Overtime: See (5, 6, 8, 11, 15, 16, 25) on HOLIDAY PAGE

REGISTERED APPRENTICES
WAGES PER HOUR:
*Note:1st Term is based on Average wage of Constructor & Modernization.

Terms 2 thru 4 Based on Journeyman's wage of classification Working in.

1 YEAR TERMS:

1st Term*	2nd Term	3rd Term	4th Term
50%	55%	65%	75%

SUPPLEMENTAL BENEFITS

Elevator Constructor		
1st Term	$ 30.99	$ 32.50
2nd Term	31.69	33.22
3rd Term	32.82	34.38
4th Term	33.94	35.54

Modernization & Service/Repair		
1st Term	$ 30.92	$ 32.43
2nd Term	31.32	32.83
3rd Term	32.37	33.92
4th Term	33.43	35.01

4-1

Insulator - Heat & Frost 05/01/2018

JOB DESCRIPTION Insulator - Heat & Frost **DISTRICT** 4

ENTIRE COUNTIES
Bronx, Kings, Nassau, New York, Queens, Richmond, Suffolk

WAGES
Per Hour: 07/01/2017

Insulators	
Heat & Frost	$ 64.68

SUPPLEMENTAL BENEFITS
Per Hour:

Insulators	
Heat & Frost	$ 33.56

OVERTIME PAY
See (A, D, O, V) on OVERTIME PAGE

HOLIDAY
Paid: See (1) on HOLIDAY PAGE
Overtime: See (5, 6, 11, 15, 16, 25, 26) on HOLIDAY PAGE

REGISTERED APPRENTICES
Wages:
1 year terms Per Hour:

1st	2nd	3rd	4th
$32.31	$38.77	$45.24	$51.68

Supplemental Benefits per hour:

Apprentice Insulator(s)

1st	$ 16.78
2nd	20.14
3rd	23.49
4th	26.85

4-12

Ironworker 05/01/2018

JOB DESCRIPTION Ironworker **DISTRICT** 4

ENTIRE COUNTIES
Bronx, Kings, Nassau, New York, Queens, Richmond, Suffolk, Westchester

PARTIAL COUNTIES

Rockland: Southern section - south of Convent Road and east of Blue Hills Road.

WAGES

Per hour:	07/01/2017	07/01/2018
Reinforcing & Metal Lathing	$ 56.28	$ 2.00/Hr. to be Allocated

SUPPLEMENTAL BENEFITS

Per hour paid:	
Reinforcing & Metal Lathing	$ 33.30

OVERTIME PAY
See (B, B1, Q) on OVERTIME PAGE

HOLIDAY
Paid: See (1) on HOLIDAY PAGE
Overtime: See (5, 6, 8, 11, 13, 18, 19, 25) on HOLIDAY PAGE

REGISTERED APPRENTICES
(1) year terms at the following wage rates:
Wages Per Hour:

1st term	2nd term	3rd term	4th Term
$ 28.38	$ 32.38	$ 35.38	$ 37.38

SUPPLEMENTAL BENIFITS
Per Hour:

1st term	2nd term	3rd term	4th Term
$ 11.34	$ 13.34	$ 17.30	$ 18.30

4-46Reinf

Ironworker 05/01/2018

JOB DESCRIPTION Ironworker **DISTRICT** 9

ENTIRE COUNTIES
Bronx, Kings, Nassau, New York, Queens, Richmond, Suffolk, Westchester

WAGES

Per Hour:	07/01/2017	01/01/2018
IRONWORKER:		
Ironworker Rigger	$ 60.47	Additional $1.36
Ironworker Stone Derrickman	$ 60.47	

SUPPLEMENTAL BENEFITS
Ironworker: $ 39.24

OVERTIME PAY
See (B, D1, *E, Q, **V) on OVERTIME PAGE
*Time and one-half shall be paid for all work on Saturday up to eight (8) hours and double time shall be paid for all work thereafter.
** Benefits same premium as wages on Holidays only

HOLIDAY
Paid: See (1) on HOLIDAY PAGE
Overtime: See (5, 6, 8, 25) on HOLIDAY PAGE
*Work stops at schedule lunch break with full day's pay.

REGISTERED APPRENTICES
Wage per hour:

1/2 year terms at the following hourly wage rate:

	1st	2nd	3rd	4th	5th	6th
07/01/2017	$30.34	$30.34	$43.07	$47.89	$52.70	$52.70

Supplemental benefits:

Per hour paid:	$19.63	$19.63	$29.47	$29.47	$29.47	$29.47

9-197D/R

Ironworker 05/01/2018

JOB DESCRIPTION Ironworker **DISTRICT** 4

ENTIRE COUNTIES
Bronx, Kings, Nassau, New York, Queens, Richmond, Suffolk, Westchester

WAGES

Per hour:	07/01/2017	01/01/2018
Ornamental	$ 45.10	Additional
Chain Link Fence	45.10	$ 1.25/Hr.
Guide Rail Installation	45.10	To be allocated

SUPPLEMENTAL BENEFITS
Per hour paid:
Journeyworker: $ 51.16

OVERTIME PAY
OVERTIME: See (A*,D1,E**,Q,V) on OVERTIME PAGE.

*Time and one-half shall be paid for all work in excess of seven (7) hours at the end of a work day to a maximum of two (2) hours on any regular work day (8th & 9th hours of work) and double time shall be paid for all work thereafter.
**Time and one-half shall be paid for all work on Saturday up to seven (7) hours and double time shall be paid for all work thereafter.

HOLIDAY
Paid: See (1) on HOLIDAY PAGE
Overtime: See (5, 6, 25) on HOLIDAY PAGE

REGISTERED APPRENTICES
1st term represents first 1-10 months, thereafter (1/2) year terms at the following percentage of Journeyman's wage.

1st	2nd	3rd	4th	5th
50%	55%	60%	70%	80%

Supplemental Benefits per hour paid:

1st Term	$ 38.74
2nd Term	39.93
3rd Term	41.12
4th Term	43.51
5th Term	45.89

4-580-Or

Ironworker 05/01/2018

JOB DESCRIPTION Ironworker **DISTRICT** 4

ENTIRE COUNTIES
Bronx, Kings, Nassau, New York, Queens, Richmond, Suffolk, Westchester

WAGES
PER HOUR:

	07/01/2017	01/01/2018	07/01/2018
Ironworker:		Additional	Additional
Structural	$ 50.05	$1.72/Hr.	$1.83/Hr.
Bridges		to be allocated	to be allocated
Machinery			

SUPPLEMENTAL BENEFITS
PER HOUR:

Journeyman $ 73.03

OVERTIME PAY
See (B, B1, Q) on OVERTIME PAGE

HOLIDAY
Paid: See (1) on HOLIDAY PAGE

Overtime: See (5, 6, 18, 19) on HOLIDAY PAGE

REGISTERED APPRENTICES
WAGES PER HOUR:

6 month terms at the following rate:

1st	$ 26.12
2nd	26.72
3rd - 6th	27.32

Supplemental Benefits
PER HOUR:

All Terms	50.72

4-40/361-Str

Laborer - Building 05/01/2018

JOB DESCRIPTION Laborer - Building **DISTRICT** 4

ENTIRE COUNTIES
Nassau, Suffolk

WAGES
WAGES
Per Hour:

	07/01/2017
Building Laborer	$ 39.40
Asbestos Abatement Workers	36.00

(Re-Roofing Removal see Roofer)

SUPPLEMENTAL BENEFITS
Per Hour:

Building Laborer	$ 29.56
Asbestoes Abatment Worker	16.45

OVERTIME PAY
See (B, E, Q) on OVERTIME PAGE
See also(H)for Fire Watch on OVERTIME PAGE
Asbestos Worker See (B, H)

HOLIDAY
Paid: See (1) on HOLIDAY PAGE
Overtime: See (5, 6, 25) on HOLIDAY PAGE
Asbestos Worker see (5,6,8 & 28)

REGISTERED APPRENTICES
Regular Hours Work Terms

Term #1	1 hr to 1000hrs
Term #2	1001hrs to 2000hrs
Term #3	2001hrs to 3000hrs
Term #4	3001hrs to 4000hrs

Wages per hour:

1st Term	$ 17.46
2nd Term	20.55
3rd Term	25.43
4th Term	30.41

Benifits per hour

1st Term	$ 19.65
2nd Term	22.44
3rd Term	22.44
4th Term	22.44

4-66

Laborer - Heavy&Highway 05/01/2018

JOB DESCRIPTION Laborer - Heavy&Highway **DISTRICT** 4

ENTIRE COUNTIES
Nassau, Suffolk

WAGES
Laborer (Heavy/Highway):
GROUP # 1: Asphalt Rakers, Concrete Curb Formsetters.
GROUP # 2: Asphalt Shovelers, Roller Boys and Tampers.
GROUP # 3: Basic Laborer, Power Tool(Jackhammer), Landscape Construction, Traffic Control Personnel(flaggers)

WAGES PER HOUR:

	07/01/2017	06/01/2018
GROUP # 1		
Total Wage Paid	$ 49.65	Additional
"Base Wage"	43.52	$ 2.37
GROUP # 2		
Total Wage Paid	$ 48.37	Additional
"Base Wage"	42.24	$ 2.33
GROUP # 3		
Total Wage Paid	$ 44.48	Additional
"Base Wage"	38.35	$ 2.21

NOTE: "Base Wage" for Premium/Overtime calculation Only. $6.13 is differance between "Base" and "Total"

SUPPLEMENTAL BENEFITS
Per Hour:
ALL GROUPS $ 29.27

After Forty (40)paid hours in a work week
OVERTIME PAY $ 18.34

OVERTIME PAY
OVERTIME PAY
See (B, E2, F) on OVERTIME PAGE
NOTES: Premium/Overtime Pay to be calculated on "Base Wage" ONLY
Example Group# 3: $38.35 X Time and One Half = $57.53 + $6.13 = $63.66
Premium Pay of 30% of base wage for all Straight time hours on all New York State, D.O.T. and other Goverment Mandated Off-Shift Work.
Hazardous Material Work add an Additional 10% of base wage

HOLIDAY
HOLIDAY
Paid: See (1) on HOLIDAY PAGE
Overtime: See (1) on HOLIDAY PAGE

REGISTERED APPRENTICES
1000 hour(s) Terms at the following Pecentage of the "Base Wage" except
4th Term calculate at Total Wage Paid.

1st 0-1000/Hrs.	60%
2nd 1001-2000/Hrs.	70%
3rd 2001-3000/Hrs.	80%
4th 3001-4000/Hrs.	90%

Supplemental Benefits per hour:

All APPRENTICES $ 29.27
After Forty(40) paid hours in a work Week
$ 18.34

4-1298

Mason **05/01/2018**

JOB DESCRIPTION Mason **DISTRICT** 4

ENTIRE COUNTIES
Bronx, Kings, Nassau, New York, Queens, Richmond, Suffolk

WAGES
Per Hour: 07/01/2017

Brick/Blocklayer $ 60.18

SUPPLEMENTAL BENEFITS
Per Hour:

Brick/Block Layer $ 27.30

OVERTIME PAY
See (A, E, E2, Q) on OVERTIME PAGE

HOLIDAY
Paid: See (1) on HOLIDAY PAGE
Overtime: See (5, 6, 25) on HOLIDAY PAGE

REGISTERED APPRENTICES
(800 hour) Terms at the following Percentage of Journeyworkers Wage:

1st	2nd	3rd	4th	5th
50%	60%	70%	80%	90%

Supplemental Benefits per hour:

All Apprentices $ 16.90

4-1Brk

Mason - Building 05/01/2018

JOB DESCRIPTION Mason - Building **DISTRICT** 9

ENTIRE COUNTIES
Nassau, Rockland, Suffolk, Westchester

WAGES
Per hour: 07/01/2017

Building:
Tile Finisher $ 43.36

SUPPLEMENTAL BENEFITS
Per Hour:

Journey worker $ 20.57* per hour paid
plus $ 8.42 per hour worked

OVERTIME PAY
See (B, E, Q, *V) on OVERTIME PAGE
* This portion of Supplemental benefits subject to same premium rate as shown for overtime wages.
Work beyond 10 hours on a Saturday shall be paid at double the hourly wage rate.

HOLIDAY
Paid: See (1) on HOLIDAY PAGE
Overtime: See (5, 6, 11, 15, 16, 25) on HOLIDAY PAGE

9-7/88A-tf

Mason - Building 05/01/2018

JOB DESCRIPTION Mason - Building **DISTRICT** 9

ENTIRE COUNTIES
Bronx, Kings, Nassau, New York, Queens, Richmond, Suffolk, Westchester

WAGES
Building:

07/01/2017

Wages per hour:

Mosaic & Terrazzo Mechanic $ 52.46

Mosaic & Terrazzo Finisher 50.86

SUPPLEMENTAL BENEFITS
Journeyworker:
Per hour:

Mosaic & Terrazzo Mechanic	$ 23.55* per hour paid plus $ 10.49 per hour worked
Mosaic & Terrazzo Finisher	$23.55* per hour paid plus $10.51 per hour worked

OVERTIME PAY
See (A, *E, Q) on OVERTIME PAGE

HOLIDAY
Paid: See (1) on HOLIDAY PAGE
Overtime: See (5, 6, 8, 11, 15, 16, 25) on HOLIDAY PAGE
Easter Sunday is an observed holiday.Holidays falling on a Saturday will be observed on that Saturday. Holidays falling on a Sunday will be celebrated on the Monday.

REGISTERED APPRENTICES
Wages per hour:
(750 Hour) terms at the following wage rate.

	1st	2nd	3rd	4th	5th	6th	7th	8th
07/01/2017	$ 26.23	$ 28.85	$ 31.48	$ 34.10	$ 36.72	$ 39.35	$ 44.59	$ 49.84

Supplemental benefits per hour:

07/01/2017	$ 11.78* plus $ 5.22**
	$ 12.95* plus $ 5.73**
	$ 14.13* plus $ 6.24**
	$ 15.31* plus $ 6.77**
	$ 16.49* plus $ 7.29**
	$ 17.66* plus $ 7.81**
	$ 20.02* plus $ 8.85**
	$ 22.37* plus $ 9.90**

* Per Hour paid and subject to same premium as overtime wages.
** Per hour worked

9-7/3

Mason - Building 05/01/2018

JOB DESCRIPTION Mason - Building **DISTRICT** 9

ENTIRE COUNTIES
Bronx, Kings, Nassau, New York, Queens, Richmond, Suffolk, Westchester

WAGES

Per hour:	07/01/2017	01/01/2018
Building-Marble Restoration:		
Marble, Stone & Terrazzo Polisher, etc	$ 40.62	$ 40.89

SUPPLEMENTAL BENEFITS
Per Hour Paid:
Journeyworker:

Building-Marble Restoration:		
Marble, Stone & Polisher	$ 26.06	$ 26.69

OVERTIME PAY
See (B, *E, Q, V) on OVERTIME PAGE
*ON SATURDAYS, 8TH HOUR AND SUCCESSIVE HOURS PAID AT DOUBLE HOURLY RATE.

HOLIDAY
Paid: See (1) on HOLIDAY PAGE
Overtime: See (5, 6, 8, 11, 15, 25) on HOLIDAY PAGE
1ST TERM APPRENTICE GETS PAID FOR ALL OBSERVED HOLIDAYS.

REGISTERED APPRENTICES
WAGES per hour:
(900 hour)terms at the following per cent of journeyman''s wages:

1st	2nd	3rd	4th

	0-900	901-1800	1801-2700	over 2700
	70%	80%	90%	100%

Supplemental Benefits Per Hour:

07/01/2017	$ 23.25	$ 23.98	$ 24.72	$ 25.45
01/01/2018	24.24	25.02	25.81	26.59

9-7/24-MP

Mason - Building 05/01/2018

JOB DESCRIPTION Mason - Building **DISTRICT** 9

ENTIRE COUNTIES
Bronx, Dutchess, Kings, Nassau, New York, Orange, Putnam, Queens, Richmond, Rockland, Suffolk, Sullivan, Ulster, Westchester

WAGES

Wages:	07/01/2017	01/01/2018
Marble Cutters& Setters	$ 58.18	$ 58.53

SUPPLEMENTAL BENEFITS
Per Hour:

Journeyworker	$ 35.12	$ 36.22

OVERTIME PAY
See (B, E, Q, V) on OVERTIME PAGE

HOLIDAY
Paid: See (1) on HOLIDAY PAGE
Overtime: See (5, 6, 8, 11, 15, 16, 25) on HOLIDAY PAGE

REGISTERED APPRENTICES
Wage Per Hour:

750 hour terms at the following wage.

07/01/2017	1st	2nd	3rd	4th	5th	6th	7th	8th	9th	10th
	1-750	751-1500	1501-2250	2251-3000	3001-3750	3751-4500	4501-5250	5251-6000	6001-6751	6751-7500
	$23.10	$25.98	$28.87	$31.76	$34.64	$37.53	$40.42	$43.30	$49.08	$54.85
01/01/2018	$23.34	$26.29	$29.22	$32.16	$35.11	$38.05	$40.98	$43.93	$49.82	$55.68

Supplemental Benefits per hour paid at the following term:

	1st	2nd	3rd	4th	5th	6th	7th	8th	9th	10th
07/01/2017	$24.53	$25.31	$26.12	$26.91	$27.71	$28.51	$29.32	$30.12	$31.71	$33.31
01/01/2018	$25.69	$26.55	$27.44	$28.30	$29.16	$30.03	$30.91	$31.77	$33.50	$35.26

9-7/4

Mason - Building 05/01/2018

JOB DESCRIPTION Mason - Building **DISTRICT** 9

ENTIRE COUNTIES
Bronx, Kings, Nassau, New York, Queens, Richmond, Suffolk, Westchester

WAGES
Per hour: 07/01/2017 01/01/2018

Marble, Stone,etc.

Maintenance Finishers:	$ 22.42	$ 22.67

Note 1: An additional $2.00 per hour for time spent grinding floor using "60 grit" and below.
Note 2: Flaming equipment operator shall be paid an additional $25.00 per day.

SUPPLEMENTAL BENEFITS
Per Hour:

Marble, Stone, etc

Maintenance Finishers:	$ 13.11	$ 13.34

OVERTIME PAY
See (B, *E, Q, V) on OVERTIME PAGE
*Double hourly rate after 8 hours on Saturday

HOLIDAY
Paid: See (5, 6, 8, 11, 15, 25) on HOLIDAY PAGE
Overtime: See (5, 6, 8, 11, 15, 25) on HOLIDAY PAGE
1st term apprentice gets paid for all observed holidays.

REGISTERED APPRENTICES
WAGES per hour:

(750 hour)terms at the following percentage of journeyman''s wage rate:	07/01/2017	01/01/2018
1st term 0-750	70%	70%
2nd term 750-1500	74%	74%
3rd trem 1501-2250	78%	78%
4th term 2251-3000	82%	82%
5th term 3001-3750	88%	88%
6th term 3751-4500	96%	96%

Supplemental Benefits:
Per hour paid

1st term	$ 12.77	$ 13.14
2nd term	12.78	13.15
3rd term	12.80	13.17
4th term	12.81	13.18
5th term	12.83	13.20
6th term	12.86	13.20

9-7/24M-MF

Mason - Building 05/01/2018

JOB DESCRIPTION Mason - Building **DISTRICT** 9

ENTIRE COUNTIES
Nassau, Rockland, Suffolk, Westchester

WAGES
Per hour: 07/01/2017

Building:
Tile Setters $ 56.13

SUPPLEMENTAL BENEFITS
Per Hour:

Journey Worker $23.60* per hour paid
Plus $8.57 per hour worked

OVERTIME PAY
See (B, E, Q, V) on OVERTIME PAGE
* This portion of benefits subject to same premium rate as shown for overtime wages.
Work beyond 10 hours on Saturday shall be paid at double the hourly wage rate.

HOLIDAY
Paid: See (1) on HOLIDAY PAGE
Overtime: See (5, 6, 11, 15, 16, 25) on HOLIDAY PAGE

REGISTERED APPRENTICES
Wage per hour:

Tile Setters:
(750 hour) term at the following wage rate:

Term: 1st 1-750	2nd 751-1500	3rd 1501-2250	4th 2251-3000	5th 3001-3750	6th 3751-4500	7th 4501-5250	8th 5251 6000
$29.13	$33.57	$36.69	$40.13	$43.77	$47.22	$50.15	$53.93

Supplemental Benefits per hour:

1st term	$14.95* plus $0.75	6th term	$18.45* plus $1.58
2nd term	$14.95* plus $0.89	7th term	$15.95* plus $5.62
3rd term	$15.95* plus $1.15	8th term	$20.70* plus $6.06
4th term	$16.95* plus $1.20		
5th term	$17.45* plus $1.53		

9-7/52A

Mason - Building / Heavy&Highway 05/01/2018

JOB DESCRIPTION Mason - Building / Heavy&Highway **DISTRICT** 4

ENTIRE COUNTIES
Bronx, Kings, Nassau, New York, Queens, Richmond, Suffolk

WAGES
WAGES

NOTE: Shall include but not limited to Precast concrete slabs (London Walks)Marble and Granite pavers 2'x 2' or larger.
Per Hour:

	07/01/2017
Stone Setter	$ 62.98
Stone Tender	$ 44.89

SUPPLEMENTAL BENEFITS
Per Hour:

Stone Setter	$ 31.65
Stone Tender	$ 19.40

OVERTIME PAY
See (*C, **E, Q) on OVERTIME PAGE
* On weekdays the eighth (8th) and ninth (9th) hours are time and one-half all work thereafter is paid at double the hourly rate.
** The first nine (9) hours on Saturday is paid at time and one-half all work thereafter is paid at double the hourly rate.

HOLIDAY
Paid: See (*18) on HOLIDAY PAGE
Overtime: See (5, 6, 10) on HOLIDAY PAGE
Paid: *Must work first 1/2.

REGISTERED APPRENTICES
Per Hour:

Stone Setter(800 hour) terms at the following Percentage of Stone Setters wage rate per hour:

1st	2nd	3rd	4th	5th	6th
50%	60%	70%	80%	90%	100%

Supplemental Benefits:
All Apprentices $ 19.51

4-1Stn

Mason - Building / Heavy&Highway 05/01/2018

JOB DESCRIPTION Mason - Building / Heavy&Highway **DISTRICT** 9

ENTIRE COUNTIES
Bronx, Kings, Nassau, New York, Queens, Richmond, Suffolk, Westchester

WAGES

Per hour:	07/01/2017	01/01/2018
Marble-Finisher	$ 46.32	$ 46.66

SUPPLEMENTAL BENEFITS
Journeyworker:
per hour paid

Marble- Finisher	$ 33.29	$34.03

OVERTIME PAY
See (B, E, Q, V) on OVERTIME PAGE

HOLIDAY
Overtime: See (5, 6, 8, 11, 15, 16, 25) on HOLIDAY PAGE
* Work beyond 8 hours on a Saturday shall be paid at double the rate.
** When an observed holiday falls on a Sunday, it will be observed the next day.

9-7/20-MF

Mason - Building / Heavy&Highway 05/01/2018

JOB DESCRIPTION Mason - Building / Heavy&Highway **DISTRICT** 4

ENTIRE COUNTIES
Bronx, Kings, Nassau, New York, Queens, Richmond, Suffolk

WAGES

Per Hour:	07/01/2017	07/01/2018
Cement Mason	$ 50.97	$ 2.00/Hr. to be Allocated

SUPPLEMENTAL BENEFITS
Per Hour:

Cement Mason	$ 32.71
Overtime Rate*	$ 49.07

OVERTIME PAY
See (*B1, Q, V) on OVERTIME PAGE
* Applies to 9th and 10th hours and Saturday Work

HOLIDAY
Paid: See (1) on HOLIDAY PAGE
Overtime: See (5, 6, 8, 11, 13, 25) on HOLIDAY PAGE

REGISTERED APPRENTICES
(1) year terms at the following Percentage of Journeyworkers Wage.

1st Term	50%
2nd Term	60%
3rd Term	70%

Supplement Benefits per hour paid:

1st Term	$ 22.08/OT Rate $ 33.12
2nd Term	$ 24.21/OT Rate $ 36.32
3rd Term	$ 26.33/OT Rate $ 39.50

4-780

Mason - Heavy&Highway 05/01/2018

JOB DESCRIPTION Mason - Heavy&Highway **DISTRICT** 4

ENTIRE COUNTIES
Bronx, Kings, Nassau, New York, Queens, Richmond, Suffolk

WAGES
Per Hour: 07/01/2017

Pointer, Caulkers & Cleaners $ 52.57

SUPPLEMENTAL BENEFITS
Per Hour:

Pointer, Cleaners & Caulkers $ 26.00

OVERTIME PAY
See (B, E2, H) on OVERTIME PAGE

HOLIDAY
Paid: See (1) on HOLIDAY PAGE
Overtime: See (5, 6, 25, 26) on HOLIDAY PAGE

REGISTERED APPRENTICES
Wages per hour:

One (1) year terms at the following wage rates.

1st	2nd	3rd	4th
$ 25.89	$ 28.97	$ 34.12	$ 41.33

Apprentices Supplemental Benefits:
(per hour paid)

$ 13.64	$ 18.15	$ 20.90	$ 21.60

4-1PCC

Operating Engineer - Building 05/01/2018

JOB DESCRIPTION Operating Engineer - Building **DISTRICT** 4

ENTIRE COUNTIES
Nassau, Suffolk

WAGES
BUILDING CATEGORIES:

CLASS " AA "CRANES:
ABI Machine (150,000lbs and over or 149,999lbs and under when driving steel sheet piles),Crane, Truck Crane, Derrick, Dragline, Dredge, Crawler Crane, Tower Crane & Pile Driver, Vertical Drill Rig (115,000lbs and over).

CLASS "A":
ABI Machine (149,999 and under used for augering and drilling), Asphalt Spreader, Backhoe Crawler(360 swing), Barrier Machine, CAP (ice machine), Cherrypicker CAP (over 70 tons), CMI or Maxim Spreader, Concrete Pump, Directional Boring, GradAll, Grader, Hydraulic Cherrypicker/Crane (2seats), Hoist (3drum or multi platform), Laser Screed, Loading Machine (Bucket/CAP 10yrds or more), Milling Machine (Large), Power Winch (stone setting/structural steel), Scoop Carry-All Scraper (in tandem), Sideboom Tractor (includes tank work), Track Alignment Machine, Stone Spreader (self propelled), Striping Machine (long line/truck mounted), Tree Grapple, Zamboni.

CLASS "B":
Backhoe (other than 360), Belt Screte, Boom Truck, Bulldozer, Boring Machine/Auger, Cherry Picker(under 70 Tons), Conveyor-Multi, Curb Machine (asphalt or concrete), Dinky Locomotive, Drill Rig (dowels)Fork Lift, Hoist (2 Drum), Loading Machine & Front Loader, Mechanical Compactors (machine drawn), Mulch Machine(Machine Fed), Post Hole/Auger, Power Wincher (Not Included in Class "A"), Asphalt Roller, Hydraulic Pump with Boring Machine, Scoop, Carryall/Scaper, Skid Loader/Skid Steer/Bobcat, Trenching Machine, Vermeer Cutter, Work Boat, Inspection/Safety Boat.

CLASS "C":
Concrete Finish/Saw/Spreader, Dirt Roller, Hoist (1 drum), Interior Hoist, Milling Machine (small), Oiler Truck Crane (pile work), Power Broom, Vactor Truck, VacAll.

CLASS "D":
Boiler (thermoplastic), Concrete Breaker, Conveyer, Curing Machine, Fork Lift or Walk Behind (power operated), Generator, Hydra Hammer, Compactors (mechanical or hand operated), Maintenance Engineer (small equipment/well point), Mechanic (field man), Micro-Trap with Compressor, Power Winch Truck Mounted, Pin Puller, Portable Heaters, Power Buggies, Pump (double action diaphragm), Pump (4 inch or over), Pump (hydraulic/submersible) Jet Pump, Pulvi-Mixer, Ridge Cutter, Shot Blaster.

CLASS "E":

Batching Plant, Compressor (structural steel/2 or more battery), Generator (small), Grinder, Ground Heater, Power Grinder, Mixer with Skip, Mulching Machine (hand fed), Power Washer, Pumps (up to 3 inch/single action 1 to 3 inches), Pump (gypsum), Root Cutter, Stump Chipper, Track Tamper, Tractor (caterpillar or wheel), Trenching Machine (hand), Welding Machine (pile work/structural steel), Deckhand on Work Boat.

	07/01/2017	06/01/2018
		Additional
Class "AA"	$ 73.56	$ 3.03/Hr
Cranes: Boom length over 100 feet add $ 1.00 per hour		
" " " 150 " " $ 1.50 " "		
" " " 250 " " $ 2.00 " "		
" " " 350 " " $ 3.00 " "		
		Additional
Class "A"	$ 61.03	$ 2.80/Hr
Add $3.50 for Hazardous Waste Work		
Class "B"	$ 57.86	$ 2.68/Hr
Add $2.50 for Hazardous Waste Work		
Class "C"	$ 55.74	$ 2.62/Hr
Add $1.50 for Hazardous Waste Work		
Class "D"	$ 44.18	$ 0.00
Add $1.00 for Hazardous Waste Work		
Class "E"	$ 42.23	$ 0.00

SUPPLEMENTAL BENEFITS
Per Hour:

All Classes	$ 36.65
Overtime Rate	30.35

OVERTIME PAY
See (D, O) on OVERTIME PAGE

HOLIDAY
Paid: See (5, 6, 15, 16, 25) on HOLIDAY PAGE
Overtime: See (5, 6, 15, 16, 25) on HOLIDAY PAGE
"NOTE" Employee must be Employed day before
and day after Holiday to recieve Holiday Pay.

REGISTERED APPRENTICES
One(1) Year Terms at the following Rate:

1st Term	$ 20.84
2nd Term	21.67
3rd Term	22.33

Supplemental Benefits per hour:

All Apprentices	$ 15.64
Overtime Rate	5.60

4-138

Operating Engineer - Building / Heavy&Highway 05/01/2018

JOB DESCRIPTION Operating Engineer - Building / Heavy&Highway **DISTRICT** 4

ENTIRE COUNTIES
Nassau, Suffolk

WAGES
Per Hour:

	07/01/2017	08/01/2017
Well Driller	$ 35.75	$ 36.07
Well Driller Helper	$ 31.22	$ 31.39

Hazardous Waste Differential
Added to Hourly Wage:

Level A	$ 3.00
Level B	2.00
Level C	1.00

Monitoring Well Work
Add to Hourly Wage:

Level A	$ 3.00
Level B	2.00

SUPPLEMENTAL BENEFITS

Per Hour:	07/01/2017
Well Driller & Helper	$ 10% of straight time rate plus $ 11.95

Additional $ 3.45 for Premium Time

OVERTIME PAY
See (B, E, G, P) on OVERTIME PAGE

HOLIDAY

Paid:	See (5, 6, 16, 23) on HOLIDAY PAGE
Overtime:	See (5, 6, 16, 23) on HOLIDAY PAGE

REGISTERED APPRENTICES
Apprentices at 12 Month Terms

Wages Per Hour:	07/01/2017
1st Term	$ 20.84
2nd Term	$ 21.67
3rd Term	$ 22.33

SUPPLEMENTAL BENIFITS
Per Hour:

1st Term	10% of Wage + $ 5.10
2nd Term	10% of Wage + $ 5.60
3rd Term	10% of Wage + $ 6.60

BENEFITS AT PREMIUM TIME
Per Hour:

1st Term	10% of Wage + $ 5.85
2nd Term	10% of Wage + $ 6.60
3rd Term	10% of Wage + $ 8.10

4-138well

Operating Engineer - Heavy&Highway 05/01/2018

JOB DESCRIPTION Operating Engineer - Heavy&Highway **DISTRICT** 4

ENTIRE COUNTIES
Nassau, Suffolk

WAGES
Party Chief - One who directs a survey party
Instrument Man - One who runs the instrument and assists Party Chief
Rodman - One who holds the rod and in general, assists the survey party
Categories cover GPS & Under Ground Surveying

Per Hour:	07/01/2017
Heavy Highway/Building	
Party Chief	$ 67.76
Instrument Man	51.66
Rodman	44.30

SUPPLEMENTAL BENEFITS
Per Hour:

Heavy Highway/Building	$ 34.23

Premium*:
Heavy Highway/Building $ 43.40

Premium**:
Heavy Highway/Building $ 52.56

* Applies to instances where 1-1/2 regular rate are paid
**Applies to instances where 2 times the rate are paid.

OVERTIME PAY
See (B, *E, Q) on OVERTIME PAGE
* Doubletime paid on the 9th hour on Saturday.

HOLIDAY
Paid: See (5, 6, 9, 11, 12, 15, 25) on HOLIDAY PAGE
Overtime: See (5, 6, 9, 11, 12, 15, 25) on HOLIDAY PAGE

4-15D-N/S co.

Operating Engineer - Heavy&Highway 05/01/2018

JOB DESCRIPTION Operating Engineer - Heavy&Highway **DISTRICT** 4

ENTIRE COUNTIES
Nassau, Suffolk

WAGES
HEAVY/HIGHWAY CATEGORIES:

CLASS "AA" CRANES:
Crane, Truck Crane, Derrick, Dragline, Dredge, Crawler Crane, Tower Crane, Pile Driver.

CLASS "A":
Asphalt Spreader, Backhoe Crawler/Hydraulic Excavator (360 up to & over 150,000lbs), Barrier Machine, Cherrypicker (over 70 tons), Concrete Pump, Directional Boring, Grader, Gradall, Hoist, Hydraulic Cherrypicker/crane, Loading Machine (bucket 10 yds. or more), Laser Screed, Milling Machine (Large), Power Winch-Stone Setting/Structural Steel or Truck Mounted, Powerhouse, Road Paver, Scoop-Carryall-Scaper in Tandem, Side Boom Tractor, Stone Spreader(self propelled), Striping Machine (long line/truck mounted), Tree Graple, Tank Work, Track Alignment Machine.

CLASS "B":
Backhoe (other than 360), Boom Truck, Bulldozer, Boring Machine/Auger, Cherry Picker (under 70 tons), Convetor-Multi, Curb Machine Asphalt/Concrete, Post Hole-Auger, Fork Lift, Hoist (2 drum), Loading Machine & Front Loader, Mulch Machine (machine fed), Power Wincher (all others not included in class A), Asphalt Roller, Hydraulic Pump with Boring Machine, Scoop, Carryall/Scraper, Skid Loader/Skid Steer, Maintenance Man on Tower Crane, Trenching Machine, Vermeer Cutter, Work Boat, Inspection/Safety Boat.

CLASS "C":
Concrete Finish/Saw/Spreader, Dirt Roller, Hoist (1 drum), Interior Hoist, Oiler Truck Crane(Pile work), Power Broom, Small Milling Machine, Vactor Truck/VacAll Truck.

CLASS "D":
Concrete Breaker, Conveyor, Curing Machine, Fireman, Fork lift (walk behind), Generator, Hydra Hammer, Maintenance Engineer, Compactors (hand operated), Pin Puller, Portable Heaters, Power Buggies, Pumps (double action, 4 inch and over, Hydraulic & Submersible), Jet Pump, Ridge Cutter, Robotic Unit Operator(Trenchless Pipe Rehab), Shotblaster.

CLASS "E":
Batching Plant (On Job Site), Compressor, Generator(small), Grinder, Mixer, Mulching Machine (Hand Feed), Oiler, Pumps (Single action up to 3 In.), Pump (Gypsum), Root Cutter, Stump Chipper, Oiler, Trenching Machine (Hand,walk behind), Track Tamper, Tractor (caterpiller or wheel),Welding Machine (Pile work & Structural Steel), Deckhand on Work Boat, Inspection/Safety Boat.

	07/01/2017	06/01/2018 Additional
Class "AA"	$ 72.86	$3.03

Cranes: Boom Length over 100 feet add $ 1.00 per hour
" " " 150 " " $ 1.50 " "
" " " 250 " " $ 2.00 " "
" " " 350 " " $ 3.00 " "

		Additional
Class "A"	$ 64.40*	$ 2.80

*Add $3.50 for Hazardous Waste Work.

Class "B"	$ 60.12*	$ 2.68
*Add $2.50 for Hazardous Waste Work.		
Class "C"	$ 57.95*	$ 2.62
*Add $1.50 for Hazardous Waste Work		
Class "D"	$ 46.08	$ 0.00
*Add $1.00 for Hazardous Waste Work		
Class "E"	$ 44.12	$ 0.00

"NOTE": ADD 30% to straight time hourly wage for NEW YORK STATE D.O.T. and other GOVERNMENTAL MANDATED off-shift work.

SUPPLEMENTAL BENEFITS
Per Hour:

ALL CLASSES	$ 36.90
Note: OVERTIME AMOUNT	$ 30.35

OVERTIME PAY
See (D, O) on OVERTIME PAGE

HOLIDAY
Paid: See (5, 6, 7, 8) on HOLIDAY PAGE
Overtime: See (5, 6, 7, 8) on HOLIDAY PAGE
"Note" Employee must be employed day before and day after a holiday to receive holiday pay.

REGISTERED APPRENTICES
Wage per hour:
REGISTERED APPRENTICES
One(1) Year Terms at the following Rate:

1st Term	$ 20.84
2nd Term	21.67
3rd Term	22.33

SUPPLEMENTAL BENEFITS:

APPRENTICES	$ 15.64
Note: Overtime Amount	$ 5.60

4-138

Operating Engineer - Marine Dredging 05/01/2018

JOB DESCRIPTION Operating Engineer - Marine Dredging **DISTRICT** 4

ENTIRE COUNTIES
Albany, Bronx, Cayuga, Chautauqua, Clinton, Columbia, Dutchess, Erie, Essex, Franklin, Greene, Jefferson, Kings, Monroe, Nassau, New York, Niagara, Orange, Orleans, Oswego, Putnam, Queens, Rensselaer, Richmond, Rockland, St. Lawrence, Suffolk, Ulster, Washington, Wayne, Westchester

WAGES
These wages do not apply to Operating Engineers on land based construction projects. For those projects, please see the Operating Engineer Heavy/Highway Rates. The wage rates below for barge mounted cranes and other equipment are only for marine dredging work in navigable waters found in the counties listed above.

Per Hour:

DREDGING OPERATIONS	07/01/2017	10/01/2017
CLASS A		
Operator, Leverman, Lead Dredgeman	$ 37.25	$ 38.18
CLASS A1 Dozer,Front Loader Operator	To conform to Operating Engineer Prevailing Wage in locality where work is being performed including benefits.	
CLASS B		
Barge Operator Spider/Spill	$ 32.21	$33.02

Tug Operator(over1000hp), OperatorII, Fill Placer, Derrick Operator, Engineer, Chief Mate, Electrician, Chief Welder, Maintenance Engineer		
Certified Welder, Boat Operator(licensed)	$ 30.33	$ 31.09
CLASS C		
Drag Barge Operator, Steward, Mate, Assistant Fill Placer,	$ 29.50	$ 30.24
Welder (please add)$ 0.06		
Boat Operator	$ 28.54	$ 29.26
CLASS D		
Shoreman, Deckhand, Rodman, Scowman, Cook, Messman, Porter/Janitor	$ 23.71	$ 24.30
Oiler(please add)$ 0.09		

SUPPLEMENTAL BENEFITS
Per Hour:
THE FOLLOWING SUPPLEMENTAL BENEFITS APPLY TO ALL CATEGORIES

	07/01/2017	10-01-2017
All Classes A & B	$10.75 plus 8% of straight time wage, Overtime hours add $ 0.63	$11.23 plus 8% of straight time wage, Overtime hours add $ 0.63
All Class C	$10.45 plus 8% of straight time wage, Overtime hours add $ 0.48	$10.93 plus 8% of straight time wage, Overtime hours add $ 0.48
All Class D	$10.15 plus 8% of straight time wage, Overtime hours add $ 0.33	$10.63 plus 8% of straight time wage, Overtime hours add $ 0.33

OVERTIME PAY
See (B, F, R) on OVERTIME PAGE

HOLIDAY
Paid: See (1) on HOLIDAY PAGE
Overtime: See (5, 6, 8, 15, 26) on HOLIDAY PAGE

4-25a-MarDredge

Operating Engineer - Survey Crew - Consulting Engineer 05/01/2018

JOB DESCRIPTION Operating Engineer - Survey Crew - Consulting Engineer **DISTRICT** 9

ENTIRE COUNTIES
Bronx, Kings, Nassau, New York, Putnam, Queens, Richmond, Suffolk, Westchester

PARTIAL COUNTIES
Dutchess: That part in Duchess County lying South of the North City line of Poughkeepsie.

WAGES
Feasibility and preliminary design surveying, any line and grade surveying for inspection or supervision of construction.

Per hour: 07/01/2017

Survey Classifications

Party Chief	$ 42.29
Instrument Man	35.39
Rodman	31.04

SUPPLEMENTAL BENEFITS
Per Hour:

All Crew Members:	$ 17.70

OVERTIME PAY
OVERTIME:.... See (B, E*, Q, V) ON OVERTIME PAGE.
*Doubletime paid on the 9th hour on Saturday.

HOLIDAY
Paid: See (5, 6, 7, 11, 16) on HOLIDAY PAGE
Overtime: See (5, 6, 7, 11, 16) on HOLIDAY PAGE

9-15dconsult

Operating Engineer - Trenchless Pipe Rehab 05/01/2018

JOB DESCRIPTION Operating Engineer - Trenchless Pipe Rehab **DISTRICT** 4

ENTIRE COUNTIES
Nassau, Suffolk

WAGES

IMPORTANT NOTE: This Category & Classifications are now located in Operating Engineers/Heavy Highway & Laborers/ Heavy Highway.

Per Hour:

	07/01/2017 (SEE)
Robotic Unit Operator	Operator(class D)
Technician/Boiler, Generator	Operator(classes C&D)
AM Liner/Hydra Seal	Laborer(Grp#3)
Hobas Pipe, Polyethyene Pipe or Pull and Inflate Liner	Laborer(Grp#3)

OVERTIME PAY

HOLIDAY

4-138TrchPReh

Painter 05/01/2018

JOB DESCRIPTION Painter **DISTRICT** 8

ENTIRE COUNTIES
Bronx, Kings, Nassau, New York, Putnam, Queens, Richmond, Suffolk, Westchester

WAGES

Per hour:	07/01/2017
Brush	$ 46.85*
Abatement/Removal of lead based or lead containing paint on materials to be repainted.	46.85*
Spray & Scaffold	$ 49.85*
Fire Escape	49.85*
Decorator	49.85*
Paperhanger/Wall Coverer	50.03

*Subtract $ 0.10 to calculate premium rate.

SUPPLEMENTAL BENEFITS

Per hour worked:	07/01/2017
Paperhanger	$ 26.19
All others	24.47
Premium	26.97**

**Applies only to "All others" catergory,not paperhanger journeyman.

OVERTIME PAY
See (A, H) on OVERTIME PAGE

HOLIDAY
Paid: See (1) on HOLIDAY PAGE
Overtime: See (5, 6, 16, 25) on HOLIDAY PAGE

REGISTERED APPRENTICES
One (1) year terms at the following wage rate.

Per hour:	07/01/2017
Appr 1st term...	$ 17.85*
Appr 2nd term...	23.26*
Appr 3rd term...	28.14*
Appr 4th term...	37.52*

*Subtract $ 0.10 to calculate premium rate.

Supplemental benefits:

Per Hour worked:	07/01/2017
Appr 1st term...	$ 12.77
Appr 2nd term...	15.62
Appr 3rd term...	18.06
Appr 4th term...	22.88

8-NYDC9-B/S

Painter 05/01/2018

JOB DESCRIPTION Painter **DISTRICT** 8

ENTIRE COUNTIES
Putnam, Suffolk, Westchester

PARTIAL COUNTIES
Nassau: All of Nassau except the areas described below: Atlantic Beach, Ceaderhurst, East Rockaway, Gibson, Hewlett, Hewlett Bay, Hewlett Neck, Hewlett Park, Inwood, Lawrence, Lido Beach, Long Beach, parts of Lynbrook, parts of Oceanside, parts of Valley Stream, and Woodmere. Starting on the South side of Sunrise Hwy in Valley Stream running east to Windsor and Rockaway Ave., Rockville Centre is the boundary line up to Lawson Blvd. turn right going west all the above territory. Starting at Union Turnpike and Lakeville Rd. going north to Northern Blvd. the west side of Lakeville road to Northern blvd. At Northern blvd. going east the district north of Northern blvd. to Port Washington Blvd. West of Port Washington blvd.to St.Francis Hospital then north of first traffic light to Port Washington and Sands Point, Manor HAven, Harbour Acres.

WAGES

Per hour:	07/01/2017
Drywall Taper	$ 46.85

SUPPLEMENTAL BENEFITS

Per hour worked:	07/01/2017
Journeyman	$ 22.47

OVERTIME PAY
See (A, H) on OVERTIME PAGE

HOLIDAY
Paid: See (1) on HOLIDAY PAGE
Overtime: See (5, 6, 16, 25) on HOLIDAY PAGE

REGISTERED APPRENTICES
Wages - Per Hour: 07/01/2017

1500 hour terms at the following wage rate:

1st term	$ 17.85
2nd term	$ 23.26
3rd term	$ 28.14
4th term	$ 37.52

Suppemental Benefits - Per hour:
One year term (1500 hours) at the following dollar amount.

1st year	$ 11.73
2nd year	$ 14.42
3rd year	$ 16.70
4th year	$ 21.20

8-NYDCT9-DWT

Painter - Bridge & Structural Steel 05/01/2018

JOB DESCRIPTION Painter - Bridge & Structural Steel **DISTRICT** 8

ENTIRE COUNTIES
Albany, Bronx, Clinton, Columbia, Dutchess, Essex, Franklin, Fulton, Greene, Hamilton, Kings, Montgomery, Nassau, New York, Orange, Putnam, Queens, Rensselaer, Richmond, Rockland, Saratoga, Schenectady, Schoharie, Suffolk, Sullivan, Ulster, Warren, Washington, Westchester

WAGES
Per Hour Worked:
STEEL:

Bridge Painting:	07/01/2017	10/01/2017	10/01/2018
	$ 49.50 + 6.38*	$ 49.50 + 6.38*	$ 49.50 + 6.38*

ADDITIONAL $6.00 per hour for POWER TOOL/SPRAY, whether straight time or overtime.

NOTE: All premium wages are to be calculated on base rate per hour only.

* For the period of May 1st to November 15th, this amount is payable up to 40 hours. For the period of Nov 16th to April 30th, this amount is payable up to 50 hours. EXCEPTION: First and last week of employment, and for the weeks of Memorial Day, Independence Day and Labor Day, where the amount is paid for the actual number of hours worked (no cap).

NOTE: Generally, for Bridge Painting Contracts, ALL WORKERS on and off the bridge (including Flagmen) are to be paid Painter"s Rate; the contract must be ONLY for Bridge Painting.

SUPPLEMENTAL BENEFITS
Per Hour Worked:

Journeyworker:	07/01/2017	10/01/2017	10/01/2018
	$ 7.50 + 23.40*	$ 8.25 + 24.35*	$ 9.50 + 26.05*

* For the period of May 1st to November 15th, this amount is payable up to 40 hours. For the period of Nov 16th to April 30th, this amount is payable up to 50 hours. EXCEPTION: First and last week of employment, and for the weeks of Memorial Day, Independence Day and Labor Day, where the amount is paid for the actual number of hours worked (no cap).

OVERTIME PAY
See (A, F, R) on OVERTIME PAGE

HOLIDAY
Paid: See (1) on HOLIDAY PAGE
Overtime: See (4, 6) on HOLIDAY PAGE

REGISTERED APPRENTICES
Wage - Per hour worked:

Apprentices: (1) year terms

	07/01/2017	10/01/2017	10/01/2018
1st year	$ 22.35	$ 22.65	$ 23.13
2nd year	33.53	33.98	34.73
3rd year	44.70	45.30	46.30

Supplemental Benefits - Per hour worked:

1st year	$ 12.36	$ 12.76	$ 13.44
2nd year	18.54	19.14	20.16
3rd year	24.72	25.52	26.88

8-DC-9/806/155-BrSS

Painter - Line Striping 05/01/2018

JOB DESCRIPTION Painter - Line Striping **DISTRICT** 8

ENTIRE COUNTIES
Albany, Bronx, Clinton, Columbia, Dutchess, Essex, Franklin, Fulton, Greene, Hamilton, Kings, Montgomery, Nassau, New York, Orange, Putnam, Queens, Rensselaer, Richmond, Rockland, Saratoga, Schenectady, Schoharie, Suffolk, Sullivan, Ulster, Warren, Washington, Westchester

WAGES
Per hour:

Painter (Striping-Highway):	07/01/2017
Striping-Machine Operator*	$ 27.11
Linerman Thermoplastic	$ 32.37

Note: * Includes but is not limited to: Positioning of cones and directing of traffic using hand held devices. Excludes the Driver/Operator of equipment used in the maintenance and protection of traffic safety.

Four (4), ten (10) hour days may be worked at straight time during a week, Monday thru Thursday. Friday may be used as a make-up day.

NOTE - In order to use the '4 Day/10 Hour Work Schedule,' as your normal schedule, you must submit an 'Employer Registration for Use of 4 Day/10 Hour Work Schedule,' form PW30.1; and there must be a dispensation of hours in place on the project. If the PW30.1 is not submitted you may be liable for overtime payments for work over 8 hours per day.

SUPPLEMENTAL BENEFITS
Per hour paid: 07/01/2017
Journeyworker:

Striping-Machine operator	$ 14.18
Linerman Thermoplastic	$ 14.55

OVERTIME PAY
See (B, E, E2, F, S) on OVERTIME PAGE

HOLIDAY
Paid: See (5, 20) on HOLIDAY PAGE
Overtime: See (5, 8, 11, 12, 15, 16, 17, 20, 21, 22) on HOLIDAY PAGE

8-1456-LS

Painter - Metal Polisher 05/01/2018

JOB DESCRIPTION Painter - Metal Polisher **DISTRICT** 8

ENTIRE COUNTIES
Albany, Allegany, Bronx, Broome, Cattaraugus, Cayuga, Chautauqua, Chemung, Chenango, Clinton, Columbia, Cortland, Delaware, Dutchess, Erie, Essex, Franklin, Fulton, Genesee, Greene, Hamilton, Herkimer, Jefferson, Kings, Lewis, Livingston, Madison, Monroe, Montgomery, Nassau, New York, Niagara, Oneida, Onondaga, Ontario, Orange, Orleans, Oswego, Otsego, Putnam, Queens, Rensselaer, Richmond, Rockland, Saratoga, Schenectady, Schoharie, Schuyler, Seneca, St. Lawrence, Steuben, Suffolk, Sullivan, Tioga, Tompkins, Ulster, Warren, Washington, Wayne, Westchester, Wyoming, Yates

WAGES

	07/01/2017	06/01/2018
Metal Polisher	$ 29.73	$ 30.58
Metal Polisher**	30.68	31.53
Metal Polisher***	33.23	34.08

**Note: Applies on New Construction & complete renovation
*** Note: Applies when working on scaffolds over 34 feet.

SUPPLEMENTAL BENEFITS
Per Hour: 07/01/2017 06/01/2018

Journeyworker:

All classification	$ 7.55	$ 7.65

OVERTIME PAY
See (B, E, E2, P, T) on OVERTIME PAGE

HOLIDAY
Paid: See (5, 6, 11, 15, 16, 25, 26) on HOLIDAY PAGE
Overtime: See (5, 6, 9, 11, 15, 16, 25, 26) on HOLIDAY PAGE

REGISTERED APPRENTICES
Wages per hour:
One (1) year term at the following wage rates:

	07/01/2017	06/01/2018
1st year	$ 12.14	$ 14.25
2nd year	13.44	15.50
3rd year	16.29	18.25

Supplentals benefits:
Per hour paid:

1st year	$ 5.62	$ 5.62
2nd year	5.62	5.62
3rd year	5.62	5.62

8-8A/28A-MP

Plumber 05/01/2018

JOB DESCRIPTION Plumber **DISTRICT** 4

ENTIRE COUNTIES
Nassau, Suffolk

WAGES
Per Hour:

	07/01/2017	05/10/2018
Plumber/ PUMP & TANK	$ 44.24	$ 44.49

SUPPLEMENTAL BENEFITS
Per Hour:

Plumber	$ 25.23	$ 26.98

OVERTIME PAY
See (B, Q, *V) on OVERTIME PAGE
(V) For Sundays & Holidays if Worked Only

HOLIDAY
Paid: See (1) on HOLIDAY PAGE
Overtime: See (5, 6, 16, 25) on HOLIDAY PAGE

REGISTERED APPRENTICES
One(1) Year Terms at the Following
Percentage of Journeymans wage:

1st Term	30%
2nd Term	40%
3rd Term	50%
4th Term	60%
5th Term	70%
6th Term	85%

Supplemental Benifits Per Hour:

1st Term	$13.31	$15.06
2nd Term	$13.95	$15.70
3rd Term	$14.77	$16.52
4th Term	$15.15	$17.40

5th Term	$18.38	$20.13

4-200 Pump & Tank

Plumber 05/01/2018

JOB DESCRIPTION Plumber **DISTRICT** 4

ENTIRE COUNTIES
Nassau, Suffolk

WAGES
Per Hour:

	07/01/2017	11/01/2017
Plumber	$ 51.48	$ 52.48

SUPPLEMENTAL BENEFITS
Per Hour:

Plumber	$ 38.72	$ 39.22

OVERTIME PAY
See (A, E, Q, *V) on OVERTIME PAGE
CODE "V" is only for SUNDAYS and HOLIDAYS THAT ARE WORKED

HOLIDAY
Paid: See (1) on HOLIDAY PAGE
Overtime: See (5, 6, 15, 16, 25) on HOLIDAY PAGE

REGISTERED APPRENTICES
One(1) Year Terms at the following percentage of Plumbers Rate:

1st Term	2nd Term	3rd Term	4th Term	5th Term
30%	40%	50%	60%	70%

Supplemental Benefits per hour:

	07/01/2017	11/01/2017
1st Term	$ 25.16	$ 25.66
2nd Term	27.47	27.97
3rd Term	28.24	29.34
4th Term	30.33	30.83
5th Term	31.91	32.41

4-200

Plumber 05/01/2018

JOB DESCRIPTION Plumber **DISTRICT** 4

ENTIRE COUNTIES
Nassau, Suffolk

WAGES
Per Hour:

	07/01/2017	05/01/2018
Plumber MAINTENANCE ONLY	$ 30.30	$ 30.80

Maintenance: Correction of problem(s)with the existing fixture or group of fixtures, preventive repairs or servicing of said fixtures

SUPPLEMENTAL BENEFITS
SUPPLEMENTAL BENEFITS
Per Hour:

Plumber Maintenance	$ 15.15	$ 15.65

OVERTIME PAY
See (B, J) on OVERTIME PAGE

HOLIDAY
Paid: See (1) on HOLIDAY PAGE
Overtime: See (5, 6, 15, 16) on HOLIDAY PAGE

4-200 Maintance

Roofer 05/01/2018

JOB DESCRIPTION Roofer **DISTRICT** 4

ENTIRE COUNTIES
Nassau, Suffolk

WAGES

Per Hour	07/01/2017	05/01/2018
ROOFER/Waterproofer		
Total Wage to be Paid	$ 44.00	$1.50 Per Hour to be allocated
"Base" Wage	40.00**	

SUPPLEMENTAL BENEFITS
Per Hour:

ROOFER/Waterproofer	$ 31.62

OVERTIME PAY
Per Hour:
NEW ROOF SEE (B,E,Q)
RE-ROOF SEE (B,E,E2,Q)
NOTE:** Overtime Pay to be calculated on "BASE" Wage then add $4.00.
(Example: $40.00 x time and one half = $60.00 + $4.00 = $64.00)

HOLIDAY
Paid: See (1) on HOLIDAY PAGE
Overtime: See (5, 6, 13, 16, 25) on HOLIDAY PAGE

REGISTERED APPRENTICES
(1) Year terms at the following Percentage of Roofers/Waterproofers Wage.

1st	2nd	3rd	4th
40%	50%	70%	80%

Supplemental Benefits per hour:

	07/01/2017
1st Term	$ 8.81
2nd Term	10.90
3rd Term	22.27
4th Term	25.38

4-154

Sheetmetal Worker 05/01/2018

JOB DESCRIPTION Sheetmetal Worker **DISTRICT** 4

ENTIRE COUNTIES
Bronx, Kings, Nassau, New York, Queens, Richmond, Rockland, Suffolk, Westchester

WAGES

Per Hour:	07/01/2017
Sign Erector	$ 47.67

NOTE: Structurally Supported Overhead Highway Signs(See STRUCTURAL IRON WORKER CLASS)

SUPPLEMENTAL BENEFITS

Per Hour:	07/01/2017
Sign Erector	$ 44.44

OVERTIME PAY
See (A, F, S) on OVERTIME PAGE

HOLIDAY
Paid: See (5, 6, 10, 11, 12, 16, 25) on HOLIDAY PAGE
Overtime: See (5, 6, 10, 11, 12, 16, 25) on HOLIDAY PAGE

REGISTERED APPRENTICES
Per Hour:
6 month Terms at the following percentage of Sign Erectors wage rate:

1st	2nd	3rd	4th	5th	6th	7th	8th	9th	10th
35%	40%	45%	50%	55%	60%	65%	70%	75%	80%

SUPPLEMENTAL BENEFITS
Per Hour:

1st	2nd	3rd	4th	5th	6th	7th	8th	9th	10th
$12.55	$14.23	$15.89	$17.57	$24.30	$26.84	$29.27	$31.47	$33.65	$35.83

4-137-SE

Sheetmetal Worker 05/01/2018

JOB DESCRIPTION Sheetmetal Worker **DISTRICT** 4

ENTIRE COUNTIES
Bronx, Kings, Nassau, New York, Queens, Richmond, Suffolk

WAGES
Per Hour: 07/01/2017

Sheetmetal Worker
$ 53.22
Temporary Operation or
Maintenace of Fans
42.58

SUPPLEMENTAL BENEFITS
Per Hour:
Sheetmetal Worker
$ 45.04
Maintenance Worker
45.04

OVERTIME PAY
See (B, E, E2, Q, V) on OVERTIME PAGE
For Maintenance See Codes B,E, Q & V

HOLIDAY
Paid: See (1) on HOLIDAY PAGE
Overtime: See (5, 6, 11, 15, 16, 25, 26) on HOLIDAY PAGE

REGISTERED APPRENTICES
Per Hour:Wages

Six(6) Month Terms As Follows:

1st & 2nd Term	$ 18.67
3rd & 4th Term	23.98
5th & 6th Term	29.29
7th Term	37.28
8th Term	39.83
9th Term	42.59

Per Hour: Supplemental Benifits

1st & 2nd Term	$ 16.49
3rd & 4th Term	22.75
5th & 6th Term	26.79
7th Term	32.84
8th Term	34.88
9th Term	36.84

4-28

Steamfitter 05/01/2018

JOB DESCRIPTION Steamfitter **DISTRICT** 4

ENTIRE COUNTIES
Bronx, Kings, Nassau, New York, Queens, Richmond, Suffolk

WAGES

Per Hour: 07/01/2017

AC Service/Heat Service $ 39.50
Steamfitter Maintenance

Refrigeration, A/C, Oil Burner and Stoker Service and Repair.
Refrigeration Compressor installation up to 5hp (combined).
Air Condition / Heating Compressor installation up to 10hp (combined).

SUPPLEMENTAL BENEFITS
Per Hour

AC Service/Heat Service $ 12.75
Steamfitter Maintenance

OVERTIME PAY
See (B, E, Q) on OVERTIME PAGE

HOLIDAY
Paid: See (5, 6, 11, 15, 25, 26) on HOLIDAY PAGE

4-638B-StmFtrRef

Steamfitter 05/01/2018

JOB DESCRIPTION Steamfitter **DISTRICT** 4

ENTIRE COUNTIES
Bronx, Kings, Nassau, New York, Queens, Richmond, Suffolk

WAGES
Per Hour: 07/01/2017

Steam/Sprinkler Fitter $ 61.81

Temporary Heat & AC $ 46.99

NOTE: Add 30% to Hourly Wage for "Contracting Agency" Mandated Off Shift Work.

SUPPLEMENTAL BENEFITS
Per Hour:

Steam/Sprinkler Fitter $ 49.18

Temporary Heat & AC $ 40.23

OVERTIME PAY
See (C, *D, O, V) on OVERTIME PAGE
(*D) On all HVAC and Mechanical contracts that do not excedd $15,000,000. and on all fire protection/sprinklet contracts that do not exceed $1,500,000.

HOLIDAY
Paid: See (1) on HOLIDAY PAGE
Overtime: See (5, 6, 11, 15, 16, 25) on HOLIDAY PAGE

REGISTERED APPRENTICES
1 year Terms at the Following:

WAGES per hour:

1st Term	2nd Term	3rd Term	4th Term	5th Term
$ 24.76	$ 30.94	$ 40.29	$ 49.46	$ 52.55

SUPPLEMENTAL BENEFIT per hour:

1st Term	2nd Term	3rd Term	4th Term	5th Term
$ 20.20	$ 25.04	$ 32.28	$ 39.52	$ 41.94

4-638A-StmSpFtr

Teamster - Asphalt Delivery 05/01/2018

JOB DESCRIPTION Teamster - Asphalt Delivery **DISTRICT** 4

ENTIRE COUNTIES
Nassau, Suffolk

WAGES
Per Hour:

Heavy Construction Work:
Shall include the supply of Asphalt for construction, improvement and modification of all or any part of Streets, Highways, Bridges, Tunnels,Railroads, Canals, Dams, Airports, Schools, Power Generation Plants, where distance between project and asphalt plant is not more than 50 miles.

TRUCK DRIVER

	07/01/2017
Asphalt Delivery	$ 35.535

Light Construction Work:
Shall include the supply of Asphalt for construction of Single & Multi Family Homes, Town Houses, Apartment Buildings, including Driveways, Streets and Curbs within those projects. Parking Lots, Office Buildings, where distance between project and asphalt plant is not more than 50 miles.

TRUCK DRIVER

	07/01/2017
Asphalt Delivery	$ 29.94

SUPPLEMENTAL BENEFITS
Per Hour:

Heavy Construction Work
TRUCK DRIVER

	07/01/2017
Asphalt Delivery	$ 41.76

Light Construction Work
TRUCK DRIVER

	07/01/2017
Asphalt Delivery	$ 11.55

OVERTIME PAY
See (B, *B2, E, **I, P, ***R, ****U) on OVERTIME PAGE
(NOTE) PREMIUM PAY of 25% on straight time hours for New York State D.O.T. and or other GOVERNMENTAL MANDATED off shift work.
Note: (B,E,P,T&*U) Apply to Heavy Construction.
Note: (B2,I,T&*U) Apply to Light Construction.
Note: (*U) Only applies after 8 hours worked on holiday.

HOLIDAY
Paid: See (1) on HOLIDAY PAGE
Overtime: See (5, 6, *16, **25) on HOLIDAY PAGE
NOTE:(*16) Paid at Double if Worked; (**25) Paid at Double if Worked.

4-282

Teamster - Building 05/01/2018

JOB DESCRIPTION Teamster - Building **DISTRICT** 4

ENTIRE COUNTIES
Nassau, Suffolk

WAGES
Per Hour:
Truck Driver (Building Demolition & Debris)

	07/01/2017
Trailers	$ 33.61
Straight Jobs	$ 33.31

SUPPLEMENTAL BENEFITS
Per Hour:

All Classifications

07/01/2017
$ 33.20

OVERTIME PAY
See (B, E, S1) on OVERTIME PAGE

HOLIDAY
Paid: See (1) on HOLIDAY PAGE
Overtime: See (5, 6, 8, 11, 12, 15, 25, 26) on HOLIDAY PAGE

4-282

Teamster - Delivery of Concrete 05/01/2018

JOB DESCRIPTION Teamster - Delivery of Concrete **DISTRICT** 4

ENTIRE COUNTIES
Nassau, Suffolk

WAGES
Per Hour:

Heavy Construction Work:
Shall Include the supply of Ready-Mix Concrete for construction, improvement and modification of all or any part of Streets, Highways, Bridges, Tunnels, Railroads, Canals, Dams, Airports, Schools & Power Generation Plants, where distance between project and asphalt plant is not more than 50 miles.

TRUCK DRIVER

	07/01/2017
Concrete Delivery	$ 39.685

Light Construction Work:
Shall include the supply of Ready-Mix Concrete for construction of Single & Multi Family Homes, Town Houses, Apartment Buildings, including Driveways, Streets and Curbs within those projects. Parking Lots and Office Buildings, where distance between project and asphalt plant is not more than 50 miles.

TRUCK DRIVER

	07/01/2017
Concrete Delivery	$ 36.255

SUPPLEMENTAL BENEFITS
Per Hour:

Heavy Construction Work	07/01/2017
Concrete Delivery	$ 40.665
Light Construction Work	07/01/2017
Concrete Delivery	$ 12.775

OVERTIME PAY
NOTE: Heavy Construction:B2,I
Light Construction:B,E,P

HOLIDAY
Paid: See (1) on HOLIDAY PAGE
Overtime: See (5, 6, *16, **25) on HOLIDAY PAGE
NOTE:(*16) Paid at Double if Worked. (**25) Paid at Double if Worked.

4-282ns

Teamster - Heavy&Highway 05/01/2018

JOB DESCRIPTION Teamster - Heavy&Highway **DISTRICT** 4

ENTIRE COUNTIES
Nassau, Suffolk

WAGES
Per Hour:

Heavy Construction Work:
Shall include the construction, improvement or modification of all or any part of Streets, Highways, Bridges, Tunnels, Railroads, Canals, Dams, Airports, Schools, Power Generation Plants.

	07/01/2017
Site Excavating (Chauffeurs)	$ 37.545

Light Construction Work:
Shall include the construction, improvment and modification of Single & Multi Family Homes, Town Houses, Apartment Buildings, including Driveways, Streets and Curbs within those projects. Parking Lots and Office Buildings.

	07/01/2017
Site Excavating (Chauffeurs)	$ 32.42

SUPPLEMENTAL BENEFITS

Per Hour:	07/01/2017
Heavy Construction Work Chauffeurs	$ 44.3725
Light Construction Work Chauffeurs	$ 11.55

OVERTIME PAY
See (B, *B2, E, **I, P, ***R, ****U) on OVERTIME PAGE
(NOTE) PREMIUM PAY of 25% on straight time hours for NEW YORK STATE D.O.T. and or other GOVERMENTAL MANDATED off shift work.
Note: (B,E,P,T & *U) Apply to Heavy Construction.
Note: (B2,I,T & *U) Apply to Light Construction.
Note: (*U) Only applies after 8 hours work on holiday

HOLIDAY
Paid: See (1) on HOLIDAY PAGE
Overtime: See (5, 6, *16, **25) on HOLIDAY PAGE
NOTE:(*16) Paid at Double if Worked. (**25) Paid at Double if Worked.

4-282

Welder 05/01/2018

JOB DESCRIPTION Welder **DISTRICT** 1

ENTIRE COUNTIES
Albany, Allegany, Bronx, Broome, Cattaraugus, Cayuga, Chautauqua, Chemung, Chenango, Clinton, Columbia, Cortland, Delaware, Dutchess, Erie, Essex, Franklin, Fulton, Genesee, Greene, Hamilton, Herkimer, Jefferson, Kings, Lewis, Livingston, Madison, Monroe, Montgomery, Nassau, New York, Niagara, Oneida, Onondaga, Ontario, Orange, Orleans, Oswego, Otsego, Putnam, Queens, Rensselaer, Richmond, Rockland, Saratoga, Schenectady, Schoharie, Schuyler, Seneca, St. Lawrence, Steuben, Suffolk, Sullivan, Tioga, Tompkins, Ulster, Warren, Washington, Wayne, Westchester, Wyoming, Yates

WAGES
Per hour 07/01/2017

Welder: To be paid the same rate of the mechanic performing the work.*

*EXCEPTION: If a specific welder certification is required, then the 'Certified Welder' rate in that trade tag will be paid.

OVERTIME PAY

HOLIDAY

1-As Per Trade

Overtime Codes

Following is an explanation of the code(s) listed in the OVERTIME section of each classification contained in the attached schedule. Additional requirements may also be listed in the HOLIDAY section.

NOTE: Supplemental Benefits are 'Per hour worked' (for each hour worked) unless otherwise noted

(AA)	Time and one half of the hourly rate after 7 and one half hours per day
(A)	Time and one half of the hourly rate after 7 hours per day
(B)	Time and one half of the hourly rate after 8 hours per day
(B1)	Time and one half of the hourly rate for the 9th & 10th hours week days and the 1st 8 hours on Saturday. Double the hourly rate for all additional hours
(B2)	Time and one half of the hourly rate after 40 hours per week
(C)	Double the hourly rate after 7 hours per day
(C1)	Double the hourly rate after 7 and one half hours per day
(D)	Double the hourly rate after 8 hours per day
(D1)	Double the hourly rate after 9 hours per day
(E)	Time and one half of the hourly rate on Saturday
(E1)	Time and one half 1st 4 hours on Saturday; Double the hourly rate all additional Saturday hours
(E2)	Saturday may be used as a make-up day at straight time when a day is lost during that week due to inclement weather
(E3)	Between November 1st and March 3rd Saturday may be used as a make-up day at straight time when a day is lost during that week due to inclement weather, provided a given employee has worked between 16 and 32 hours that week
(E4)	Saturday and Sunday may be used as a make-up day at straight time when a day is lost during that week due to inclement weather
(E5)	Double time after 8 hours on Saturdays
(F)	Time and one half of the hourly rate on Saturday and Sunday
(G)	Time and one half of the hourly rate on Saturday and Holidays
(H)	Time and one half of the hourly rate on Saturday, Sunday, and Holidays
(I)	Time and one half of the hourly rate on Sunday
(J)	Time and one half of the hourly rate on Sunday and Holidays
(K)	Time and one half of the hourly rate on Holidays
(L)	Double the hourly rate on Saturday
(M)	Double the hourly rate on Saturday and Sunday
(N)	Double the hourly rate on Saturday and Holidays
(O)	Double the hourly rate on Saturday, Sunday, and Holidays
(P)	Double the hourly rate on Sunday
(Q)	Double the hourly rate on Sunday and Holidays
(R)	Double the hourly rate on Holidays
(S)	Two and one half times the hourly rate for Holidays, if worked

(S1) Two and one half times the hourly rate the first 8 hours on Sunday or Holidays One and one half times the hourly rate all additional hours.

(T) Triple the hourly rate for Holidays, if worked

(U) Four times the hourly rate for Holidays, if worked

(V) Including benefits at SAME PREMIUM as shown for overtime

(W) Time and one half for benefits on all overtime hours.

Holiday Codes

PAID Holidays:

Paid Holidays are days for which an eligible employee receives a regular day's pay, but is not required to perform work. If an employee works on a day listed as a paid holiday, this remuneration is in addition to payment of the required prevailing rate for the work actually performed.

OVERTIME Holiday Pay:

Overtime holiday pay is the premium pay that is required for work performed on specified holidays. It is only required where the employee actually performs work on such holidays. The applicable holidays are listed under HOLIDAYS: OVERTIME. The required rate of pay for these covered holidays can be found in the OVERTIME PAY section listings for each classification.

Following is an explanation of the code(s) listed in the HOLIDAY section of each classification contained in the attached schedule. The Holidays as listed below are to be paid at the wage rates at which the employee is normally classified.

(1)	None
(2)	Labor Day
(3)	Memorial Day and Labor Day
(4)	Memorial Day and July 4th
(5)	Memorial Day, July 4th, and Labor Day
(6)	New Year's, Thanksgiving, and Christmas
(7)	Lincoln's Birthday, Washington's Birthday, and Veterans Day
(8)	Good Friday
(9)	Lincoln's Birthday
(10)	Washington's Birthday
(11)	Columbus Day
(12)	Election Day
(13)	Presidential Election Day
(14)	1/2 Day on Presidential Election Day
(15)	Veterans Day
(16)	Day after Thanksgiving
(17)	July 4th
(18)	1/2 Day before Christmas
(19)	1/2 Day before New Years
(20)	Thanksgiving
(21)	New Year's Day
(22)	Christmas
(23)	Day before Christmas
(24)	Day before New Year's
(25)	Presidents' Day
(26)	Martin Luther King, Jr. Day
(27)	Memorial Day
(28)	Easter Sunday

New York State Department of Labor - Bureau of Public Work
State Office Building Campus
Building 12 - Room 130
Albany, New York 12240

REQUEST FOR WAGE AND SUPPLEMENT INFORMATION

As Required by Articles 8 and 9 of the NYS Labor Law

Fax (518) 485-1870 or mail this form for new schedules or for determination for additional occupations.

This Form Must Be Typed

Submitted By: (Check Only One) ☐ Contracting Agency ☐ Architect or Engineering Firm ☐ Public Work District Office Date:

A. Public Work Contract to be let by: (Enter Data Pertaining to Contracting/Public Agency)

1. Name and complete address ☐ (Check if new or change)

Telephone: ( ) Fax: ( )
E-Mail:

2. NY State Units (see Item 5)

- ☐ 01 DOT
- ☐ 02 OGS
- ☐ 03 Dormitory Authority
- ☐ 04 State University Construction Fund
- ☐ 05 Mental Hygiene Facilities Corp.
- ☐ 06 OTHER N.Y. STATE UNIT
- ☐ 07 City
- ☐ 08 Local School District
- ☐ 09 Special Local District, i.e., Fire, Sewer, Water District
- ☐ 1O Village
- ☐ 11 Town
- ☐ 12 County
- ☐ 13 Other Non-N.Y. State (Describe)

3. SEND REPLY TO (☐ check if new or change)
Name and complete address:

Telephone:( ) Fax: ( )
E-Mail:

4. SERVICE REQUIRED. Check appropriate box and provide project information.

- ☐ New Schedule of Wages and Supplements.

APPROXIMATE BID DATE :

- ☐ Additional Occupation and/or Redetermination

PRC NUMBER ISSUED PREVIOUSLY FOR THIS PROJECT :

OFFICE USE ONLY

B. PROJECT PARTICULARS

5. Project Title _____

Description of Work _____

Contract Identification Number _____

Note: For NYS units, the OSC Contract No. _____

6. Location of Project:
Location on Site _____

Route No/Street Address _____

Village or City _____

Town _____

County _____

7. Nature of Project - Check One:

- ☐ 1. New Building
- ☐ 2. Addition to Existing Structure
- ☐ 3. Heavy and Highway Construction (New and Repair)
- ☐ 4. New Sewer or Waterline
- ☐ 5. Other New Construction (Explain)
- ☐ 6. Other Reconstruction, Maintenance, Repair or Alteration
- ☐ 7. Demolition
- ☐ 8. Building Service Contract

8. OCCUPATION FOR PROJECT :

- ☐ Construction (Building, Heavy Highway/Sewer/Water)
- ☐ Tunnel
- ☐ Residential
- ☐ Landscape Maintenance
- ☐ Elevator maintenance
- ☐ Exterminators, Fumigators
- ☐ Fire Safety Director, NYC Only
- ☐ Guards, Watchmen
- ☐ Janitors, Porters, Cleaners, Elevator Operators
- ☐ Moving furniture and equipment
- ☐ Trash and refuse removal
- ☐ Window cleaners
- ☐ Other (Describe)

9. Has this project been reviewed for compliance with the Wicks Law involving separate bidding? YES ☐ NO ☐

10. Name and Title of Requester

Signature

SEE PAGE TWO FOR LAWS RELATING TO PUBLIC WORK CONTRACTS

NEW YORK STATE DEPARTMENT OF LABOR
Bureau of Public Work - Debarment List

LIST OF EMPLOYERS INELIGIBLE TO BID ON OR BE AWARDED ANY PUBLIC WORK CONTRACT

Under Article 8 and Article 9 of the NYS Labor Law, a contractor, sub-contractor and/or its successor shall be debarred and ineligible to submit a bid on or be awarded any public work or public building service contract/sub-contract with the state, any municipal corporation or public body for a period of five (5) years from the date of debarment when:

- Two (2) final determinations have been rendered within any consecutive six-year (6) period determining that such contractor, sub-contractor and/or its successor has WILLFULLY failed to pay the prevailing wage and/or supplements
- One (1) final determination involves falsification of payroll records or the kickback of wages and/or supplements

NOTE: The agency issuing the determination and providing the information, is denoted under the heading 'Fiscal Officer'. DOL = NYS Dept. of Labor; NYC = New York City Comptroller's Office; AG = NYS Attorney General's Office; DA = County District Attorney's Office.

A list of those barred from bidding, or being awarded, any public work contract or subcontract with the State, under section 141-b of the Workers' Compensation Law, may be obtained at the following link, on the NYS DOL Website:

https://dbr.labor.state.ny.us/EDList/searchPage.do

For inquiries where WCB is listed as the "Agency", please call 1-866-546-9322

NYSDOL Bureau of Public Work Debarment List 05/09/2018

Article 8

AGENCY	Fiscal Officer	FEIN	EMPLOYER NAME	EMPLOYER DBA NAME	ADDRESS	DEBARMENT START DATE	DEBARMENT END DATE
DOL	DOL	*****0996	A-1 CONSTRUCTION & RENOVATION INC		1973 81ST ST - SUITE A-5 BROOKLYN NY 11214	01/08/2015	01/08/2020
DOL	NYC		ABDUL KARIM		C/O NORTH AMERICAN IRON W 1560 DECATUR STREETRIDGEWOOD NY 11385	05/15/2015	05/15/2020
DOL	DOL	*****8488	ABELCRAFT OF NEW YORK CORP		640 ASHFORD AVENUE ARDSLEY NY 10502	08/27/2013	08/27/2018
DOL	DOL	*****4539	ACCOMPLISHED WALL SYSTEMS INC		112 OSCAWANA HEIGHTS ROAD PUTNAM VALLEY NY 10542	08/27/2013	08/27/2018
DOL	DOL	*****8018	ACCURATE MECHANICAL LLC		9547 BUSTLETON AVENUE PHILADELPHIA PA 19115	02/05/2014	02/05/2019
DOL	DOL		ACCURATE MECHANICAL OF PHILADELPHIA LLC		9547 BUSTLETON AVENUE PHILADELPHIA PA 19115	02/05/2014	02/05/2019
DOL	DOL	*****3344	ACT INC		6409 LAND O LAKES BLVD LAND O LAKES FL 34638	11/10/2015	11/10/2020
DOL	NYC		ADRIANA SELA	C/O COLONIAL ROOFING COMPANY INC	247 48TH STREET BROOKLYN NY 11220	02/05/2014	02/05/2019
DOL	DOL	*****1687	ADVANCED SAFETY SPRINKLER INC		261 MILL ROAD P O BOX 296EAST AURORA NY 14052	07/29/2015	07/29/2020
DOL	NYC	*****6775	ADVENTURE MASONRY CORP.		1535 RICHMOND AVENUE STATEN ISLAND NY 10314	12/13/2017	12/13/2022
DOL	DOL		AJ TORCHIA		10153 ROBERTS RD SAUQUOIT NY 13456	08/09/2016	08/09/2021
DOL	DOL	*****3344	ALL CATASTROPHE CONSTRUCTION TEAM INC	ACT INC	6409 LAND O LAKES BLVD LAND O LAKES FL 34638	11/10/2015	11/10/2020
DOL	DOL	*****8740	ALLSTATE ENVIRONMENTAL CORP		C/O JOSE MONTAS 27 BUTLER PLACEYONKERS NY 10710	03/18/2011	03/19/2020
DOL	DOL		AMADEO J TORCHIA	TORCHIA'S HOME IMPROVEMEN T	10153 ROBERTS RD SAUQUOIT NY 13456	08/09/2016	08/09/2021
DOL	NYC		ANISUL ISLAM		C/O RELIANCE GENERAL CONS 644 OCEAN PARKWAYBROOKLYN NY 11230	09/02/2015	09/02/2020
DOL	DOL	*****7004	ANNEX CONTRACTING LTD		3005 WYNSUM AVENUE MERRICK NY 11566	08/18/2014	08/18/2019
DOL	DOL	*****7004	ANNEX GENERAL CONTRACTING INC		3005 WYNSUM AVENUE MERRICK NY 11566	08/18/2014	08/18/2019
DOL	DA		ANTHONY CARDINALE		58-48 59TH STREET MASPETH NY 11378	05/16/2012	05/08/2020
DOL	DOL		ANTHONY J MINGARELLI JR		C/O T & T CONCRETE INC 2560 HAMBURG TURNPIKELACKAWANNA NY 14218	07/08/2015	07/08/2020
DOL	DOL		ANTHONY PERGOLA		3 WEST MAIN ST/SUITE 208 ELMSFORD NY 10323	01/23/2017	01/23/2022
DOL	DOL	*****3020	APCO CONTRACTING CORP		24 SOUTH MARYLAND AVENUE PORT WASHINGTON NY 11050	09/24/2012	09/02/2020
DOL	DOL	*****3219	APOLLO CONSTRUCTION SERVICES CORP	APOLLO PAINTING CO	157 TIBBETTS ROAD YONKERS NY 10705	03/12/2014	03/12/2019
DOL	DOL		APOLLO PAINTING CO		157 TIBBETTS ROAD YONKERS NY 10705	03/12/2014	03/12/2019
DOL	DOL	*****3295	APOLLO PAINTING CORP		3 ALAN B SHEPART PLACE YONKERS NY 10705	03/12/2014	03/12/2019
DOL	AG	*****0194	APPLIED CONSTRUCTION INC		46 RUGBY ROAD WESTBURY NY 11590	11/20/2013	11/20/2018
DOL	NYC	*****8403	AQUA JET PAINTING CORP		10 VIKING DRIVE WEST ISLIP NY 11795	04/16/2014	04/16/2019
DOL	NYC	*****9232	ARKAY CONSTRUCTION INC		102-104 GREYLOCK AVENUE BELLEVILLE NJ 07109	07/15/2015	07/15/2020
DOL	DOL	*****3953	ASCAPE LANDSCAPE & CONSTRUCTION CORP		634 ROUTE 303 BLAUVELT NY 10913	07/26/2012	11/19/2018
DOL	NYC	*****4779	ASTORIA GENERAL CONTRACTING CORP		35-34 31ST STREET LONG ISLAND CITY NY 11106	09/02/2015	09/02/2020
DOL	NYC	*****7217	ASTRO COMMUNICATIONS OF NY CORP		79 ALEXANDER AVE- STE 36A BRONX NY 10454	10/30/2015	10/30/2020
DOL	NYC	*****6046	ATLANTIC SUN CONTRUCTION CORP		58-46 59TH AVENUE MASPETH NY 11378	05/08/2015	05/08/2020

DOL	NYC	*****6683	ATLAS RESTORATION CORP.		35-12 19TH AVENUE ASTORIA NY 11105	08/02/2017	08/02/2022
DOL	NYC		AUDLEY O'BRIEN		1273 NORTH AVENUE/#1 CP NEW ROCHELLE NY 10804	04/07/2015	04/07/2020
DOL	DOL		AVIS R HILL		3510 HICKORY WALK LANE ELLENWOOD GA 32094	01/22/2015	01/22/2020
DOL	AG		AVTAR SINGH		116-24 127TH STREET SOUTH OZONE PARK NY 11420	12/22/2015	12/22/2020
DOL	AG		BALDEV SINGH		116-24 127TH STREET SOUTH OZONE PARK NY 11420	12/22/2015	12/22/2020
DOL	DOL		BARBARA CASSIDY		7 BLENIS PLACE VALHALLA NY 10595	04/02/2015	04/02/2020
DOL	DOL		BARRY KINNEY		6409 LAND O LAKES BLVD LAND O LAKES FL 34638	11/10/2015	11/10/2020
DOL	NYC	*****3915	BEACON RESTORATION INC		SUITE B-8 782 PELHAM PARKWAY SOUTHBRONX NY 10462	04/21/2016	04/21/2021
DOL	DOL		BEVERLY F WILLIAMS		1238 PRESIDENT STREET BROOKLYN NY 11225	11/18/2013	11/18/2018
DOL	DOL	*****4512	BOB BRUNO EXCAVATING, INC.		5 MORNINGSIDE DRIVE AUBURN NY 13021	11/15/2016	11/15/2021
DOL	DOL	*****4512	BOB BRUNO EXCAVATING, INC.		5 MORNINGSIDE DRIVE AUBURN NY 13021	11/15/2016	11/15/2021
DOL	DOL	*****8551	BRANDY'S MASONRY		216 WESTBROOK STREET P O BOX 304SAYRE PA 18840	08/09/2016	08/09/2021
DOL	NYC	*****6555	BROOKLYN WELDING CORP		1273 NORTH AVENUE/ #1 CP NEW ROCHELLE NY 10804	04/07/2015	04/07/2020
DOL	DOL	*****1449	BRRESTORATION NY INC		140 ARCADIA AVENUE OSWEGO NY 13126	09/12/2016	09/12/2021
DOL	DOL		BRUCE MORSEY		C/O KENT HOLLOW SIDING LL 29A BRIDGE STREETNEW MILFORD CT 06776	01/15/2016	01/15/2021
DOL	DOL	*****6156	C & J LANDSCAPING & MAINTENANCE INC		520 PINE HILL ROAD CHESTER NY 10940	06/23/2014	06/23/2019
DOL	DOL	*****8809	C.B.E. CONTRACTING CORPORATION		310 MCGUINESS BLVD GREENPOINT NY 11222	03/07/2017	03/07/2022
DOL	DOL		CARIBBEAN POOLS		C/O DOUGLAS L MALARKEY 64 VICTORIA DRIVEBINGHAMTON NY 13904	02/04/2016	02/04/2021
DOL	NYC	*****9172	CASSIDY EXCAVATING INC		14 RAILROAD AVENUE VALHALLA NY 10595	05/15/2014	04/02/2020
DOL	DOL	*****6745	CATSKILL FENCE INSTALLATIONS INC		5445 ROUTE 32 CATSKILL NY 12414	08/22/2014	08/22/2019
DOL	DOL	*****8530	CAZ CONTRACTING CORP		37-11 35TH AVENUE LONG ISLAND CITY NY 11101	08/26/2013	08/26/2018
DOL	DOL	*****8809	CBE CONTRACTING CORP		142 EAST MARKET STREET LONG BEACH NY 11561	03/07/2017	03/07/2022
DOL	AG		CESAR J. AGUDELO		81-06 34TH AVENUE APT. 6EJACKSON HEIGHTS NY 11372	02/07/2018	02/07/2023
DOL	DOL	*****7655	CHAMPION CONSTRUCTION SERVICES CORP		2131 SCHENECTADY AVENUE BROOKLYN NY 11234	11/18/2015	11/18/2020
DOL	NYC		CHARLES CASSIDY JR		14 RAILROAD AVENUE VALHALLA NY 10595	05/15/2014	04/02/2020
DOL	DOL		CHARLES ZIMMER JR		216 WESTBROOK STREET P O BOX 304SAYRE PA 18840	08/09/2016	08/09/2021
DOL	DOL		CHRISTINE J HEARNE		C/O CJ-HEARNE CONSTRUCTIO 131 PONCE DE LEON AVE NEATLANTA GA 30308	12/01/2015	12/01/2020
DOL	DOL	*****3360	CITY LIMITS GROUP INC		2279 HOLLERS AVENUE BRONX NY 10475	01/07/2014	06/23/2019
DOL	DOL	*****0671	CJ-HEARNE CONSTRUCTION CO		SUITE 204 131 PONCE DE LEON AVENUEATLANTA GA 30308	12/01/2015	12/01/2020
DOL	NYC	*****2905	COLONIAL ROOFING COMPANY INC		247 48TH STREET BROOKLYN NY 11220	02/05/2014	02/05/2019
DOL	NYC	*****3182	COLORTECH INC		5990 58TH AVENUE MASPETH NY 11378	11/18/2013	11/18/2018
DOL	DOL	*****2703	CONKLIN'S TECH-MECHANICAL INC		5 PARKER AVENUE POUGHKEEPSIE NY 12601	03/25/2014	03/25/2019
DOL	DOL		CONSTANTINOS ZERVAS		37-11 35TH AVENUE LONG ISLAND CITY NY 11101	08/26/2013	08/26/2018
DOL	NYC	*****4468	CRAFT CONTRACTING GROUP INC		3256 BRUNER AVENUE BRONX NY 10469	07/29/2014	07/29/2019

DOL	NYC	*****8507	CRAFT FENCE INC		3256 BRUNER AVENUE BRONX NY 10469	07/29/2014	07/29/2019
DOL	NYC	*****2164	CREATIVE TRUCKING INC		58-83 54TH STREET MASPETH NY 11378	02/26/2016	02/26/2021
DOL	DOL	*****7761	D L MALARKEY CONSTRUCTION		64 VICTORIA DRIVE BINGHAMTON NY 13904	02/04/2016	02/04/2021
DOL	DOL	*****7888	D L MALARKEY CONSTRUCTION INC		64 VICTORIA DRIVE BINGHAMTON NY 13904	02/04/2016	02/04/2021
DOL	DOL	*****5629	DAKA PLUMBING AND HEATING LLC		2561 ROUTE 55 POUGHQUAG NY 12570	02/19/2016	02/19/2021
DOL	DOL		DANICA IVANOSKI		61 WILLETT ST. PASSAIC NJ 07503	10/26/2016	10/26/2021
DOL	DOL		DARYL T RIEKS		C/O RIEKS CONTRACTING LLC 4804 GAHWILER ROADAUBURN NY 13021	05/01/2015	05/01/2020
DOL	NYC	*****7707	DASSLE CONTRACTING INC		213-37 39TH AVE/SUITE 120 BAYSIDE NY 11360	05/08/2015	05/08/2020
DOL	DOL		DAVID MARTINEZ		C/O EMPIRE TILE INC 6 TREMONT COURTHUNTINGTON STATION NY 11746	03/08/2016	03/08/2021
DOL	NYC		DAWN AVILA AKA DAWN BECHTOLD		1ST FLOOR STORE FRONT 88-10 LITTLE NECK PARKWAYFLORAL PARK NY 11001	06/24/2014	06/24/2019
DOL	NYC		DAWN BECHTOLD AKA DAWN AVILA		1ST FLOOR STORE FRONT 88-10 LITTLE NECK PARKWAYFLORAL PARK NY 11001	06/24/2014	06/24/2019
DOL	DOL		DEAN ROBBINS III		212 OXFORD WAY SCHENECTADY NY 12309	12/11/2012	09/16/2018
DOL	DOL		DEBBIE STURDEVANT		29 MAPLEWOOD DRIVE BINGHAMTON NY 13901	02/21/2017	02/21/2022
DOL	NYC	*****3865	DECOMA BUILDING CORPORATION		134 EVERGREEN PL/STE 101 EAST ORANGE NJ 07018	12/30/2013	12/30/2018
DOL	DOL		DEDA GAZIVODAN		C/O DAKA PLUMBING AND H 2561 ROUTE 55POUGHQUAG NY 12570	02/19/2016	02/19/2021
DOL	DOL	*****1446	DELTA CONTRACTING PAINTING AND DECORATING INC		437 SUNRISE HIGHWAY WEST BABYLON NY 11707	08/12/2013	08/12/2018
DOL	DOL	*****3538	DELTA CONTRACTING PAINTING AND DESIGN INC		75 MCCULLOCH DRIVE DIX HILLS NY 11746	10/19/2010	08/12/2018
DOL	DOL		DENNIS SCHWANDTNER		C/O YES SERVICE AND REPAI 145 LODGE AVEHUNTINGTON STATION NY 11476	08/09/2016	08/09/2021
DOL	DOL	*****9868	DESANTIS ENTERPRISES		161 OSWEGO RIVER ROAD PHOENIX NY 13135	09/24/2013	11/18/2018
DOL	DOL		DF CONTRACTORS OF ROCHESTER, INC.		1835 DAANSEN RD. PALMYRA NY 14522	05/16/2017	05/16/2022
DOL	DOL		DF CONTRACTORS, INC.		1835 DAANSEN RD. PALMYRA NY 14522	05/16/2017	05/16/2022
DOL	DOL	*****9252	DI BERNARDO TILE AND MARBLE CO INC		15 WALKER WAY ALBANY NY 12205	03/21/2014	03/21/2019
DOL	NYC		DIMITRIOS KOUTSOUKOS		C/O ASTORIA GENERAL CONTR 35-34 31ST STREETLONG ISLAND CITY NY 11106	09/02/2015	09/02/2020
DOL	NYC		DIMITRIOS TSOUMAS		35-12 19TH AVENUE ASTORIA NY 11105	08/02/2017	08/02/2022
DOL	DOL	*****3242	DONALD R. FORSAY	DF LAWN SERVICE	1835 DAANSEN RD. PALMYRA NY 14522	05/16/2017	05/16/2022
DOL	DOL		DONALD R. FORSAY		1835 DAANSEN RD. PALMYRA NY 14522	05/16/2017	05/16/2022
DOL	DOL		DORIS SKODA		C/O APCO CONTRACTING CORP 24 SOUTH MARYLAND AVENUEPORT WASHINGTON NY 11050	09/24/2012	09/02/2020
DOL	NYC	*****7404	DOSANJH CONSTRUCTION CORP		9439 212TH STREET QUEENS VILLAGE NY 11428	02/25/2016	02/25/2021
DOL	DOL		DOUGLAS L MALARKEY	MALARKEY CONSTRUCTI ON	64 VICTORIA DRIVE B INGHAMTON NY 13904	02/04/2016	02/04/2021
DOL	DOL	*****6982	DUFOUR GROUP INC	DUFOUR MASONRY	353 WEST 56TH STREET #7M NEW YORK NY 10019	06/10/2014	06/10/2019
DOL	DOL		DUFOUR MASONRY		353 WEST 56TH ST #7M NEW YORK NY 10019	06/10/2014	06/10/2019
DOL	DOL		DUFOUR MASONRY & RESTORATION INC		353 WEST 56TH STREET #7M NEW YORK NY 10019	06/10/2014	06/10/2019

DOL	DOL	*****5840	DYNA CONTRACTING INC		363 88TH STREET BROOKLYN NY 11209	11/18/2013	11/18/2018
DOL	DOL		E C WEBB		6409 LAND O LAKES BLVD LAND O LAKES FL 34638	11/10/2015	11/10/2020
DOL	DOL		EARL GALBREATH		640 ASHFORD AVENUE ARDSLEY NY 10502	08/27/2013	08/27/2018
DOL	DOL		EARL L WILSON	WILSON BROTHER DRYWALL CONTRACTOR S	36 ABERSOLD STREET ROCHESTER NY 14621	08/31/2015	08/31/2020
DOL	DOL	*****1496	EAST COAST DRYWALL INC		1238 PRESIDENT STREET BROOKLYN NY 11225	11/18/2013	11/18/2018
DOL	NYC		EDWARD MENKEN		C/O AQUA JET PAINTING 10 VIKING DRIVEWEST ISLIP NY 11795	04/16/2014	04/16/2019
DOL	NYC	*****0900	EF PRO CONTRACTING INC		147 BROOME AVENUE ATLANTIC BEACH NY 11509	03/03/2014	03/03/2019
DOL	NYC		EFSTRATIOS BERNARDIS		23-73 48TH STREET LONG ISLAND CITY NY 11103	04/24/2014	04/24/2019
DOL	DOL		ELIZABETH RAMADANI		C/O RAMADA CONSTRUCTION 80 SAVO LOOPSTATEN ISLAND NY 10309	01/07/2014	01/07/2019
DOL	DOL		ELLEN DESANTIS	DESANTIS ENTERPRISES	161 OSWEGO RIVER ROAD PHOENIX NY 13135	09/24/2013	11/18/2018
DOL	DOL	*****0780	EMES HEATING & PLUMBING CONTR		5 EMES LANE MONSEY NY 10952	01/20/2002	01/20/3002
DOL	AG		EMILIO FRANZA		90 JUNIUS STREET BROOKLYN NY 11212	01/23/2014	01/23/2019
DOL	DOL		EMPIRE CONCRETE SERVICES LLC		101 SULLYS TRAIL/SUITE 20 PITTSFORD NY 14534	11/18/2013	01/07/2019
DOL	DOL	*****0511	EMPIRE CONCRETE SYSTEMS LLC		101 SULLYS TRAIL/ SUITE 2 PITTSFORD NY 14534	11/18/2013	01/07/2019
DOL	DOL	*****2353	EMPIRE CONSTRUCTORS LLC		101 SULLYS TRAIL/SUITE 20 PITTSFORD NY 14534	11/18/2013	01/07/2019
DOL	DOL		EMPIRE PRECAST LLC		101 SULLYS TRAIL/SUITE 20 PITTSFORD NY 14534	11/18/2013	01/07/2019
DOL	DOL	*****3270	EMPIRE TILE INC		6 TREMONT COURT HUNTINGTON STATION NY 11746	03/08/2016	03/08/2021
DOL	NYC		EVERTON CARLESS		134 EVERGREEN PL/STE 101 EAST ORANGE NJ 07018	12/30/2013	12/30/2018
DOL	DOL	*****7403	F & B PAINTING CONTRACTING INC		2 PARKVIEW AVENUE HARRISON NY 10604	09/26/2016	09/26/2021
DOL	DOL		F KALAFATIS		2279 HOLLERS AVENUE BRONX NY 10475	01/07/2014	06/23/2019
DOL	DOL		FANTASTIC PAINTING		493 LANSING ROAD FULTONVILLE NY 12072	11/18/2013	11/18/2018
DOL	DOL		FAY MATTHEW		C/O CHAMPION CONSTRUCTION 2131 SCHENECTADY AVENUEBROOKLYN NY 11234	11/18/2015	11/18/2020
DOL	DOL		FAZIA GINA ALI-MOHAMMED	C/O CHAMPION CONSTRUCTI ON	2131 SCHENECTADY AVENUE BROOKLYN NY 11234	11/18/2015	11/18/2020
DOL	DOL	*****1311	FLOZ-ON PAINTING & DECORATING INC		12 DUNDERBERG ROAD TOMKINS NY 10986	10/16/2013	10/16/2018
DOL	DOL	*****8961	FLOZ-ON PAINTING INC		12 DUNDERBERG ROAD TOMKINS NY 10986	10/16/2013	10/16/2018
DOL	DOL		FRAN MICELI		2279 HOLLERS AVENUE BRONX NY 10475	01/07/2014	06/23/2019
DOL	DOL		FRANCES KALAFATIS		2279 HOLLERS AVENUE BRONX NY 10475	01/07/2014	06/23/2019
DOL	DOL		FRANCES KALAFATIS-MICELI		2279 HOLLERS AVENUE BRONX NY 10475	01/07/2014	06/23/2019
DOL	DOL		FRANK BENEDETTO		C/O F & B PAINTING CONTRA 2 PARKVIEW AVENUEHARRISON NY 10604	09/26/2016	09/26/2021
DOL	DOL		FRANK DEMARTINO		101-61 99TH STREET OZONE PARK NY 11416	02/15/2017	02/15/2022
DOL	DOL		FRANK DEMARTINO		101-61 99TH STREET OZONE PARK NY 11416	02/15/2017	02/15/2022
DOL	DOL		FRANK J MERCANDO		134 MURRAY AVENUE YONKERS NY 10704	12/11/2009	02/03/2019
DOL	DOL		FRANK MICELI JR	C/O FRANK MICELI JR CONTRACTIN G INC	19 CLIFF STREET NEW ROCHELLE NY 10801	10/16/2013	10/16/2018

DOL	DOL	*****1321	FRANK MICELI JR CONTRACTING INC		19 CLIFF STREET NEW ROCHELLE NY 10801	10/16/2013	10/16/2018
DOL	DOL	*****2724	FRESH START PAINTING CORP		157 TIBBETS ROAD YONKERS NY 10705	03/12/2014	03/12/2019
DOL	DOL		G FUCCI CONSTRUCTION SERVICES		3 ALAN B SHEPARD PLACE YONKERS NY 10705	03/12/2014	03/12/2019
DOL	DOL	*****6767	G FUCCI PAINTING INC		C/O SPIEGEL & UTRERA 1 MAIDEN LANE - 5TH FLNEW YORK NY 10038	03/12/2014	03/12/2019
DOL	DOL	*****4546	GAF PAINTING LLC		157 TIBBETS ROAD YONKERS NY 10705	03/12/2014	03/12/2019
DOL	DOL		GALINDA ROTENBERG		C/O GMDV TRANS INC 67-48 182ND STREETFRESH MEADOWS NY 11365	06/24/2016	06/24/2021
DOL	DOL		GARDEN STATE PAINTING		157 TIBBETTS ROAD YONKERS NY 10705	03/12/2014	03/12/2019
DOL	DOL		GARY MCDOWELL	GM CONSTRUCTI ON & LAWN CARE SERVICE	76 PLEASANT STREET WELLSVILLE NY 14895	06/11/2013	06/11/2018
DOL	DOL		GEORGE DI BERNARDO		C/O DI BERNARDO TILE 15 WALKER WAYALBANY NY 12205	03/21/2014	03/21/2019
DOL	DA		GEORGE LUCEY		150 KINGS STREET BROOKLYN NY 11231	01/19/1998	01/19/2998
DOL	DOL	*****0878	GM CONSTRUCTION & LAWN CARE SERVICE		76 PLEASANT STREET WELLSVILLE NY 14895	06/11/2013	06/11/2018
DOL	DOL	*****5674	GMDV TRANS INC		67-48 182ND STREET FRESH MEADOWS NY 11365	06/24/2016	06/24/2021
DOL	DOL	*****0090	GOLDS FLOORING INSTALLATIONS INC		25 HAMILTON ROAD MONTICELLO NY 12701	10/16/2013	10/16/2018
DOL	DOL		GREGORY A FUCCI		C/O PAF PAINTING SERVICES 157 TIBBETTS ROADYONKERS NY 10705	03/12/2014	03/12/2019
DOL	DOL		GREGORY FUCCI JR		C/O APOLLO CONSTRUCTION 157 TIBBETTS ROADYONKERS NY 10705	03/12/2014	03/12/2019
DOL	DOL		GREGORY S. OLSON		P.O BOX 100 200 LATTA BROOK PARKHORSEHEADS NY 14845	03/08/2018	03/08/2023
DOL	DOL	*****9456	GUILLO CONTRACTING CORP		P O BOX 229 CALVERTON NY 11933	07/08/2013	07/08/2018
DOL	NYC	*****0346	H N H CONTRACTORS CORP		4558 BROADWAY # 6 NEW YORK NY 10040	08/04/2014	08/04/2019
DOL	DOL		HALSSAM FOSTOK		5 HANSEN PLACE WAYNE NJ 07470	09/18/2013	09/18/2018
DOL	NYC		HAMEEDUL HASAN		240 HOME STREET TEANECK NJ 07666	08/04/2014	08/04/2019
DOL	AG	*****9918	HARA ELECTRIC CORP		2461 47TH STREET ASTORIA NY 11103	09/26/2013	09/26/2018
DOL	NYC		HARMEL SINGH		15 CLINTON LANE HICKSVILLE NY 11801	02/25/2016	02/25/2021
DOL	NYC		HAROLD KUEMMEL		58-83 54TH STREET MASPETH NY 11378	02/26/2016	02/26/2021
DOL	AG		HARVINDER SINGH PAUL		90 JUNIUS STREET BROOKLYN NY 11212	01/23/2014	01/23/2019
DOL	DOL		HENRY VAN DALRYMPLE		2663 LANTERN LANE ATLANTA GA 30349	12/01/2015	12/01/2020
DOL	DOL	*****6370	HILLIANO CONSTRUCTION & ELECTRICAL INC		354 MAGNOLIA STREET ROCHESTER NY 14611	01/22/2015	01/22/2020
DOL	DOL	*****8282	IDEMA DEVELOPMENT INC		91 COLLEGE AVENUE POUGHKEEPSIE NY 12603	12/04/2015	12/04/2020
DOL	DOL	*****8282	IDEMA GENERAL CONTRACTORS INC		91 COLLEGE AVENUE POUGHKEEPSIE NY 12603	12/04/2015	12/04/2020
DOL	DOL	*****7001	INTEGRATED CONSTRUCTION & POWER SYSTEMS INC		SUITE 100 2105 W GENESEE STREETSYRACUSE NY 13219	01/06/2016	01/06/2021
DOL	AG	*****0000	J A M CONSTRUCTION CORP		SUITE 125 265 SUNRISE HIGHWAYROCKVILLE CENTRE NY 10457	04/07/2016	04/07/2021
DOL	DOL	*****7598	J M RICH LLC		P O BOX 268 STILLWATER NY 12170	09/16/2013	03/21/2019
DOL	DOL	*****3478	J N P CONSTRUCTION CORP		50 LOUIS COURT P O BOX 1907SOUTH HACKENSACK NY 07606	03/21/2014	03/21/2019
DOL	DOL		J N RICH LLC		P O BOX 268 STILLWATER NY 12170	09/16/2013	03/21/2019

DOL	DOL	*****4910	J V MAGIC TOUCH CORPORATION		94-25 57TH AVENUE, APT 5G ELMHURST NY 11373	01/12/2015	01/12/2020
DOL	DOL		J.A. HIRES CADWALLADER		P.O BOX 100 200 LATTA BROOK PARKHORSEHEADS NY 14845	03/08/2018	03/08/2023
DOL	DOL		JACQUELINE HOWE		C/O FLOZ-ON PAINTING INC 12 DUNDERBERG ROADTOMKINS NY 10986	10/16/2013	10/16/2018
DOL	DOL	*****8627	JAG I LLC		635 LUZERNE ROAD QUEENSBURY NY 12804	09/16/2013	09/16/2018
DOL	DOL	*****2868	JAG INDUSTRIES INC		175 BROAD ST - SUITE 320 GLENS FALLS NY 12801	09/16/2013	09/16/2018
DOL	DOL		JAMES B RHYNDERS		91 COLLEGE AVENUE POUGHKEEPSIE NY 12603	12/04/2015	12/04/2020
DOL	DOL		JAMES BOYCE		C/O EMPIRE CONCRETE SYST 101 SULLYS TRAIL/SUITE 20PITTSFORD NY 14534	11/18/2013	01/07/2019
DOL	DOL		JAMES E RHYNDERS		91 COLLEGE AVENUE POUGHKEEPSIE NY 12603	12/04/2015	12/04/2020
DOL	AG		JAMES FALCONE		SUITE 125 265 SUNRISE HIGHWAYROCKVILLE CENTRE NY 10457	04/07/2016	04/07/2021
DOL	DOL		JAMES RHYNDERS SR		91 COLLEGE AVENUE POUGHKEEPSIE NY 12603	12/04/2015	12/04/2020
DOL	DOL		JAMES SICKAU		3090 SHIRLEY ROAD NORTH COLLINS NY 14111	04/19/2011	07/08/2020
DOL	DOL		JASON M RICH		P O BOX 268 STILLWATER NY 12170	09/16/2013	03/21/2019
DOL	DOL		JASON W MILLIMAN		C/O ROCHESTER ACOUSTICAL P O BOX 799HILTON NY 14468	02/19/2016	02/19/2021
DOL	DOL		JEFF P BRADLEY		520 PINE HILL ROAD CHESTER NY 10940	06/23/2014	06/23/2019
DOL	NYC		JEFFREY CASSIDY		14 RAILROAD AVENUE VALHALLA NY 10595	05/15/2014	04/02/2020
DOL	DOL		JERALD HOWE		C/O FLOZ-ON PAINTING INC 12 DUNDERBERG ROADTOMKINS NY 10986	10/16/2013	10/16/2018
DOL	DOL		JEROME LACITIGNOLA		C/O CATSKILL FENCE INSTAL 5445 ROUTE 32 CATSKILL NY 12414	08/22/2014	08/22/2019
DOL	DOL		JESSICA WHITESIDE		C/O BRRESTORATION NY INC 140 ARCADIA AVENUEOSWEGO NY 13126	09/12/2016	09/12/2021
DOL	AG		JOHN ANTHONY MASSINO		36-49 204TH STREET BAYSIDE NY 11372	02/07/2018	02/07/2023
DOL	DOL		JOHN DESCUL		437 SUNRISE HIGHWAYA WEST BABYLON NY 11704	08/12/2013	08/12/2018
DOL	DOL		JOHN F. CADWALLADER		200 LATTA BROOK PARK HORSEHEADS NY 14845	03/08/2018	03/08/2023
DOL	DOL	*****4612	JOHN F. CADWALLADER, INC.	THE GLASS COMPANY	P.O BOX 100 200 LATTA BROOK PARKHORSEHEADS NY 14845	03/08/2018	03/08/2023
DOL	AG	*****0600	JOHNCO CONTRACTING, INC.		36-49 204TH STREET BAYSIDE NY 11372	02/07/2018	02/07/2023
DOL	DOL		JON E DEYOUNG		261 MILL ROAD P O BOX 296EAST AURORA NY 14052	07/29/2015	07/29/2020
DOL	DOL		JORGE VILLALOBOS		94-25 57TH AVENUE - APT 5 ELMHURST NY 11373	01/12/2015	01/12/2020
DOL	DOL		JOSE MONTAS		27 BUTLER PLACE YONKERS NY 10710	03/18/2011	03/19/2020
DOL	AG		JOSEPH FALCONE		SUITE 125 265 SUNRISE HIGHWAYROCKVILLE CENTRE NY 10457	04/07/2016	04/07/2021
DOL	DOL	*****9273	JOSEPH M LOVETRO		P O BOX 812 BUFFALO NY 14220	08/09/2016	08/09/2021
DOL	NYC		JOSEPH MARTINO		1535 RICHMOND AVENUE STATEN ISLAND NY 10314	12/13/2017	12/13/2022
DOL	DOL		JOSEPH MARTONE		112 OSCAWANA HEIGHTS ROAD PUTNAM VALLEY NY 10542	08/27/2013	08/27/2018
DOL	DOL		JOSHUA DEBOWSKY		9547 BUSTLETON AVENUE PHILADELPHIA PA 19115	02/05/2014	02/05/2019
DOL	DOL		JOYA MUSCOLINO		10 ST CHARLES STREET THORNWOOD NY 10594	09/03/2013	09/03/2018

DOL	DOL		JUANA MARTINEZ		C/O LEAD CONSTRUCTION 27 BUTLER PLACEYONKERS NY 10710	03/19/2015	03/19/2020
DOL	DOL	*****4340	JUBCO SITE DEVELOPMENT LLC		462 LAKEVIEW AVENUE VALHALLA NY 10595	12/16/2013	12/16/2018
DOL	DOL		JULIUS AND GITA BEHREND		5 EMES LANE MONSEY NY 10952	11/20/2002	11/20/3002
DOL	DOL	*****5062	K R F SITE DEVELOPMENT INC		375 LAKE SHORE DRIVE PUTNAM VALLEY NY 10579	01/23/2017	01/23/2022
DOL	DOL		KAREN HARTMAN		C/O GUILLO CONTRACTING P O BOX 229CALVERTON NY 11933	07/08/2013	07/08/2018
DOL	NYC		KATHLEEN SELA	C/O COLONIAL ROOFING COMPANY INC	247 48TH STREET BROOKLYN NY 11220	02/05/2014	02/05/2019
DOL	DOL		KENNETH FIORENTINO		375 LAKE SHORE DRIVE PUTNAM VALLEY NY 10579	01/23/2017	01/23/2022
DOL	DOL	*****9732	KENT HOLLOW SIDING LLC		29A BRIDGE STREET NEW MILFORD CT 06776	01/15/2016	01/15/2021
DOL	DOL		KEVIN BABCOCK JR		P O BOX 46 THOMPSON RIDGE NY 10985	08/22/2014	08/22/2019
DOL	DOL		KEVIN M BABCOCK		P O BOX 46 THOMPSON RIDGE NY 10985	08/22/2014	08/22/2019
DOL	DOL		KIM SOROCENSKI		C/O SOLUTION MATTERS INC 198 NORWOOD ROADPORT JEFFERSON NY 11776	11/19/2015	11/19/2020
DOL	AG		KOSTAS "GUS" ANDRIKOPOULOS		2461 47TH STREET ASTORIA NY 11103	09/26/2013	09/26/2018
DOL	DA	*****8816	LAKE CONSTRUCTION AND DEVELOPMENT CORPORATION		150 KINGS STREET BROOKLYN NY 11231	08/19/1998	08/19/2998
DOL	DOL	*****6224	LAKESIDE FIRE SPRINKLERS LLC		125 CHAUTAUQUA AVENUE LAKEWOOD NY 14750	06/24/2015	06/24/2020
DOL	AG	*****4643	LALO DRYWALL, INC.		221 OLD FORD ROAD NEW PLATZ NY 12561	05/20/2016	05/20/2021
DOL	DOL	*****4505	LARAPINTA ASSOCIATES INC		29 MAPLEWOOD DRIVE BINGHAMTON NY 13901	02/21/2017	02/21/2022
DOL	DOL		LAURI MARTONE		112 OSCAWANA HEIGHTS ROAD PUTNAM VALLEY NY 10542	08/27/2013	08/27/2018
DOL	DOL		LAVERN GLAVE		161 ROBYN RD MONROE NY 10950	09/15/2014	09/15/2019
DOL	DOL		LAVERN GLAVE		161 ROBYN RD MONROE NY 10950	01/30/2018	01/30/2023
DOL	DOL		LAWRENCE J RUGGLES		P O BOX 371 ROUND LAKE NY 12151	05/12/2014	05/12/2019
DOL	DOL	*****1364	LEAD CONSTRUCTION SERVICES INC		3 ALAN B SHEPARD PLACE YONKERS NY 10705	03/19/2015	03/19/2020
DOL	DOL	*****4388	LEN.J CONSTRUCTION, LLC		PO BOX 10007 ALBANY NY 12201	06/24/2016	09/19/2022
DOL	DOL	*****4388	LEN.J CONSTRUCTION, LLC		PO BOX 10007 ALBANY NY 12201	06/24/2016	09/19/2022
DOL	DOL	*****4388	LEN.J CONSTRUCTION, LLC		PO BOX 10007 ALBANY NY 12201	09/19/2017	09/19/2022
DOL	DOL	*****4388	LEN.J CONSTRUCTION, LLC		PO BOX 10007 ALBANY NY 12201	09/19/2017	09/19/2022
DOL	DOL	*****4388	LEN.J CONSTRUCTION, LLC		PO BOX 10007 ALBANY NY 12201	01/17/2017	09/19/2022
DOL	DOL	*****4388	LEN.J CONSTRUCTION, LLC		PO BOX 10007 ALBANY NY 12201	09/19/2017	09/19/2022
DOL	DOL	*****4388	LEN.J CONSTRUCTION, LLC		PO BOX 10007 ALBANY NY 12201	09/19/2017	09/19/2022
DOL	DOL	*****4388	LEN.J CONSTRUCTION, LLC		PO BOX 10007 ALBANY NY 12201	08/14/2017	09/19/2022
DOL	AG		LEONID FRIDMAN		APT 5 200 BRIGHTON, 15TH STBROOKLYN NY 11235	01/23/2014	01/23/2019
DOL	DOL		LEROY NELSON JR		PO BOX 10007 ALBANY NY 12201	09/19/2017	09/19/2022
DOL	DOL		LEROY NELSON JR		PO BOX 10007 ALBANY NY 12201	09/19/2017	09/19/2022
DOL	DOL		LEROY NELSON JR		PO BOX 10007 ALBANY NY 12201	09/19/2017	09/19/2022
DOL	DOL		LEROY NELSON JR		PO BOX 10007 ALBANY NY 12201	09/19/2017	09/19/2022
DOL	DOL		LEROY NELSON JR		PO BOX 10007 ALBANY NY 12201	08/14/2017	08/14/2022

DOL	DOL		LEROY NELSON JR		PO BOX 10007 ALBANY NY 12201	01/17/2017	09/19/2022
DOL	DOL		LINDSEY R CRILL		143 FILLMORE AVENUE BUFFALO NY 14210	01/08/2015	01/08/2020
DOL	AG	*****4216	LOTUS-C CORP.		81-06 34TH AVENUE APT. 6EJACKSON HEIGHTS NY 11372	02/07/2018	02/07/2023
DOL	AG		LUIS MARTINEZ	LALO DRYWALL	211 MAIN ST. NEW PALTZ NY 12561	05/20/2016	05/20/2021
DOL	NYC	*****2850	M A 2 FLAGS CONTRACTING CORP		25-18 100TH STREET EAST ELMHURST NY 11369	08/21/2013	08/21/2018
DOL	DOL		M ANVER BEIG		142 EAST MARKET STREET LONG BEACH NY 11561	03/07/2017	03/07/2022
DOL	AG	*****6957	M B DIN CONSTRUCTION INC		8831 20TH AVENUE/SUITE 6E BROOKLYN NY 11214	11/17/2015	11/17/2020
DOL	NYC	*****6317	M S QUALITY CONSTRUCTION LLC		27 MAPLEWOOD AVENUE COLONIA NJ 07067	02/04/2015	02/04/2020
DOL	DOL		M. ANVER BEIG		142 EAST MARKET STREET LONG BEACH NY 11561	03/07/2017	03/07/2022
DOL	NYC		MACIEJ SONTOWSKI		27 MAPLEWOOD AVENUE COLONIA NJ 07067	02/04/2015	02/04/2020
DOL	NYC	*****9590	MACK GLASSNAUTH IRON WORKS INC		137 LIBERTY AVENUE BROOKLYN NY 11212	12/21/2015	12/21/2020
DOL	NYC	*****3141	MACKEY REED ELECTRIC INC		1ST FLOOR STORE FRONT 88-10 LITTLE NECK PARKWAYFLORAL PARK NY 11001	06/24/2014	06/24/2019
DOL	DOL	*****1784	MADISON AVE CONSTRUCTION CORP		39 PENNY STREET WEST ISLIP NY 11795	11/02/2016	11/02/2021
DOL	DOL		MALARKEY'S BAR & GRILL LLC		64 VICTORIA DRIVE BINGHAMTON NY 13904	02/04/2016	02/04/2021
DOL	DOL	*****0705	MALARKEY'S PUB & GRUB LLC		64 VICTORIA DRIVE BINGHAMTON NY 13904	02/04/2016	02/04/2021
DOL	DA		MANUEL P TOBIO		150 KINGS STREET BROOKLYN NY 14444	08/19/1998	08/19/2998
DOL	DA		MANUEL TOBIO		150 KINGS STREET BROOKLYN NY 11231	08/19/1998	08/19/2998
DOL	DOL		MARIACHI'S PIZZERIA		C/O DOUGLAS L MALARKEY 64 VICTORIA DRIVEBINGHAMTON NY 13904	02/04/2016	02/04/2021
DOL	DOL		MARK MIONIS		6409 LAND O LAKES BLVD LAND O LAKES FL 34638	11/10/2015	11/10/2020
DOL	DOL	*****5533	MARQUISE CONSTRUCTION & DEVELOPMENT CORP		10 ST CHARLES STREET THORNWOOD NY 10594	09/03/2013	09/03/2018
DOL	DOL	*****8810	MARQUISE CONSTRUCTION ASSOCIATES INC		20 BOSWELL ROAD PUTNAM VALLEY NY 10579	09/03/2013	09/03/2018
DOL	DOL	*****1134	MARQUISE CONSTRUCTION CORP		10 ST CHARLES STREET THORNWOOD NY 10594	09/03/2013	09/03/2018
DOL	DOL		MARVIN A STURDEVANT		29 MAPLEWOOD DRIVE BINGHAMTON NY 13901	02/21/2017	02/21/2022
DOL	DOL		MATTHEW IDEMA GENERAL CONTRACTORS INC		91 COLLEGE AVENUE POUGHKEEPSIE NY 12603	12/04/2015	12/04/2020
DOL	DOL	*****6416	MCCALL MASONRY		P O BOX 304 SAYRE PA 18840	08/09/2016	08/09/2021
DOL	DOL	*****4259	MERCANDO CONTRACTING CO INC		134 MURRAY AVENUE YONKERS NY 10704	12/11/2009	02/03/2019
DOL	DOL	*****0327	MERCANDO INDUSTRIES LLC		134 MURRAY AVENUE YONKERS NY 10704	12/11/2009	02/03/2019
DOL	NYC	*****5330	METRO DUCT SYSTEMS INC		1219 ASTORIA BOULEVARD LONG ISLAND CITY NY 11102	04/16/2014	11/19/2020
DOL	DOL	*****3368	MICEK CONSTRUCTION CO INC		20 CROSS STREET FALCONER NY 14733	12/02/2014	12/02/2019
DOL	DOL		MICHAEL A PASCARELLA		SUITE 100 2105 WEST GENESEE STREET SYRACUSE NY 13219	01/06/2016	01/06/2021
DOL	DOL		MICHAEL F LEARY JR		3813 SNOWDEN HILL ROADNEW HARTFORD NY 13413	06/19/2013	06/19/2018
DOL	DOL		MICHAEL F LEARY JR METAL STUD & DRYWALL		3813 SNOWDEN HILL ROAD NEW HARTFORD NY 13413	06/19/2013	06/19/2018
DOL	NYC		MICHAEL HIRSCH		C/O MZM CORP 163 S MAIN STREETNEW CITY NY 10956	01/28/2016	01/28/2021
DOL	DOL		MICHAEL KTISTAKIS		363 88TH STREET BROOKLYN NY 11209	11/18/2013	11/18/2018

DOL	DOL		MICHAEL WILSON	WILSON BROTHER DRYWALL CONTRACTORS	36 ABERSOLD STREET ROCHESTER NY 14621	08/31/2015	08/31/2020
DOL	DOL		MICHELLE L BARBER		635 LUZERNE ROAD QUEENSBURY NY 12804	09/16/2013	09/16/2018
DOL	NYC		MIGUEL ACOSTA		25-18 100TH STREET EAST ELMHURST NY 11369	08/21/2013	08/21/2018
DOL	NYC		MILANCE HADZIC		22 CALIFORNIA AVE - STE 1 PATERSON NJ 07503	03/11/2015	03/11/2020
DOL	AG		MOHAMMAD RIAZ		46 RUGBY ROAD WESTBURY NY 11590	11/20/2013	11/20/2018
DOL	AG		MOHAMMED N CHATHA		8831 20TH AVENUE/SUITE 6E BROOKLYN NY 11214	11/17/2015	11/17/2020
DOL	DOL	*****2737	MOUNTAIN'S AIR INC		2471 OCEAN AVENUE- STE 7A BROOKLYN NY 11229	09/24/2012	09/18/2020
DOL	DOL		MUHAMMAD BEIG		142 EAST MARKET STREET LONG BEACH NY 11561	03/07/2017	03/07/2022
DOL	DOL		MUHAMMAD BEIG		142 EAST MARKET STREET LONG BEACH NY 11561	03/07/2017	03/07/2022
DOL	DOL		MUHAMMAD PERVAIZ		C/O CHAMPION CONSTRUCTION 2131 SCHENECTADY AVENUEBROOKLYN NY 11234	11/18/2015	11/18/2020
DOL	NYC	*****3613	MZM CORP		163 S MAIN STREET NEW CITY NY 10956	01/28/2016	01/28/2021
DOL	NYC	*****1284	NEW AMERICAN RESTORATION INC		22 CALIFORNIA AVE - STE 1 PATERSON NJ 07503	03/11/2015	03/11/2020
DOL	DA	*****6988	NEW YORK INSULATION INC		58-48 59TH STREET MASPETH NY 11378	05/16/2012	05/08/2020
DOL	NYC	*****4839	NEW YORK RIGGING CORP		58-83 54TH STREET MASPETH NY 11378	02/26/2016	02/26/2021
DOL	DOL		NICHOLAS DEGREGORY JR	NJ DEGREGORY & COMPANY	1698 ROUTE 9 GLENS FALLS NY 12801	05/23/2013	05/23/2018
DOL	NYC		NICHOLAS PROVENZANO		147 BROOME AVENUE ATLANTIC BEACH NY 11509	03/03/2014	03/03/2019
DOL	NYC		NICHOLAS PROVENZANO		147 BROOME AVENUE ATLANTIC BEACH NY 11509	03/03/2014	03/03/2019
DOL	DOL	*****5279	NJ DEGREGORY & COMPANY		1698 ROUTE 9 GLENS FALLS NY 12801	05/23/2013	05/23/2018
DOL	DOL		NJ DEGREGORY & SONS CONSTRUCTION		1698 ROUTE 9 GLENS FALLS NY 12801	05/23/2013	05/23/2018
DOL	NYC	*****1968	NORTH AMERICAN IRON WORKS INC		1560 DECATUR STREET RIDGEWOOD NY 11385	05/15/2015	05/15/2020
DOL	DOL	*****6966	NORTH COUNTRY DRYWALL AND PAINT		23167 COUNTY ROUTE 59 DEXTER NY 13634	10/24/2016	10/24/2021
DOL	DOL	*****0065	NORTHEAST LANDSCAPE AND MASONRY ASSOC		3 WEST MAIN ST/SUITE 208 ELMSFORD NY 10523	01/23/2017	01/23/2022
DOL	DOL	*****1845	OC ERECTERS, LLC A/K/A OC ERECTERS OF NY INC.		1207 SW 48TH TERRACE DEERFIELD BEACH FL 33442	01/16/2018	01/16/2023
DOL	NYC	*****8337	OPTIMUM CONSTRUCTION INC		23-73 48TH STREET LONG ISLAND CITY NY 11103	04/24/2014	04/24/2019
DOL	NYC		ORSON ARROYO		C/O METRO DUCT SYSTEMS 12-19 ASTORIA BOULEVARDLONG ISLAND CITY NY 11102	04/16/2014	11/19/2020
DOL	DOL	*****4546	PAF PAINTING CORP		161 TIBBETTS ROAD YONKERS NY 10705	03/12/2014	03/12/2019
DOL	DOL	*****5242	PAF PAINTING SERVICES INC	GARDEN STATE PAINTING	157 TIBBETTS ROAD YONKERS NY 10103	03/12/2014	03/12/2019
DOL	DOL		PAF PAINTING SERVICES OF WESTCHESTER INC		C/O SPIEGEL & UTRERA 1 MAIDEN LANE - 5TH FLNEW YORK NY 10038	03/12/2014	03/12/2019
DOL	DOL	*****8802	PAT'S HEATING AND AIR CONDITIONING LTD		P O BOX 371 ROUND LAKE NY 12151	05/12/2014	05/12/2019
DOL	DOL		PATRICIA M RUGGLES		P O BOX 371 ROUND LAKE NY 12151	05/12/2014	05/12/2019
DOL	NYC	*****9422	PELIUM CONSTRUCTION, INC.		22-33 35TH ST. ASTORIA NY 11105	12/30/2016	12/30/2021
DOL	DOL		PETER M PERGOLA		3 WEST MAIN ST/SUITE 208 ELMSFORD NY 10523	01/23/2017	01/23/2022
DOL	NYC		PETER TRITARIS		5990 58TH AVENUE MASPETH NY 11378	11/18/2013	11/18/2018
DOL	DOL		PIERRE LAPORT		224 COUNTY HIGHWAY 138 BROADALBIN NY 12025	03/07/2017	03/07/2022

DOL	DOL	*****1543	PJ LAPORT FLOORING INC		224 COUNTY HIGHWAY 138 BROADALBIN NY 12025	03/07/2017	03/07/2022
DOL	DOL	*****2989	PROFESSIONAL ESTIMATING & BUSINESS CORP		157 TIBBETS ROAD YONKERS NY 10705	03/12/2014	03/12/2019
DOL	DOL	*****6895	PROLINE CONCRETE OF WNY INC		3090 SHIRLEY ROAD NORTH COLLINS NY 14111	04/19/2011	07/08/2020
DOL	DA	*****6817	QUADRANT METAL BUILDINGS LLC		2740 SW MARTIN DOWNS BLVD PALM CITY FL 34990	08/25/2016	08/25/2021
DOL	DOL	*****0015	RAMADA CONSTRUCTION CORP		80 SAVO LOOP STATEN ISLAND NY 10309	01/07/2014	01/07/2019
DOL	NYC		RAMESHWAR ASU		137 LIBERTY AVENUE BROOKLYN NY 11212	12/21/2015	12/21/2020
DOL	DOL		RANA A KAHN		1973 81ST ST - SUITE A-5 BROOKLYN NY 11214	01/08/2015	01/08/2020
DOL	NYC		RANTIK PARIKH		13 LORIANN ROAD WARREN NJ 07059	07/15/2015	07/15/2020
DOL	DOL	*****2633	RAW POWER ELECTRIC CORP		3 PARK CIRCLE MIDDLETOWN NY 10940	09/16/2013	09/15/2019
DOL	DOL	*****2633	RAW POWER ELECTRIC CORP		3 PARK CIRCLE MIDDLETOWN NY 10940	01/30/2018	01/30/2023
DOL	NYC		RAYMOND PEARSON		P O BOX 957 PORT JEFFERSON STA NY 11776	03/12/2014	03/12/2019
DOL	AG	*****7015	RCM PAINTING INC.		69-06 GRAND AVENUE 2ND FLOORMASPETH NY 11378	02/07/2018	02/07/2023
DOL	DOL		REGINALD WARREN		161 ROBYN RD MONROE NY 10950	09/15/2014	09/15/2019
DOL	DOL		REGINALD WARREN		161 ROBYN RD MONROE NY 10950	01/30/2018	01/30/2023
DOL	NYC	*****3461	RELIANCE GENERAL CONSTRUCTION INC		644 OCEAN PARKWAY BROOKLYN NY 11230	09/02/2015	09/02/2020
DOL	DOL		REVOLUTIONARY FLOORS LLC		P O BOX 268 STILLWATER NY 12170	09/16/2013	03/21/2019
DOL	DOL		RHINO CONCRETE LLC		101 SULLYS TRAIL/SUITE 20 PITTSFORD NY 14534	11/18/2013	01/07/2019
DOL	DA		RIANN MULLER		2740 SW MARTIN DOWNS BLVD PALM CITY FL 34990	08/25/2016	08/25/2021
DOL	DOL		RICHARD WILSON		C/O DUFOUR GROUP INC 353 WEST 56TH STREET #7MNEW YORK NY 10019	06/10/2014	06/10/2019
DOL	DOL	*****8618	RIEKS CONTRACTING LLC		4804 GAHWILER ROAD AUBURN NY 13021	05/01/2015	05/01/2020
DOL	DOL		ROBBYE BISSESAR		89-51 SPRINGFIELD BLVD QUEENS VILLAGE NY 11427	01/11/2003	01/11/3003
DOL	DOL		ROBERT BRUNO		3 GAYLORD ST AUBURN NY 13021	11/15/2016	11/15/2021
DOL	DOL	*****1855	ROBERT D BISHOP JR	ROBERT D BISHOP JR	P O BOX 112 MORRISSONVILLE NY 12962	07/15/2014	07/15/2019
DOL	DOL		ROBERT D BISHOP JR		P O BOX 112 MORRISONVILLE NY 12962	07/15/2014	07/15/2019
DOL	NYC		ROBERT GUIDO		3256 BRUNER AVENUE BRONX NY 10469	07/29/2014	07/29/2019
DOL	DOL		ROBERT L EVANS		128A NORTH STAMFORD ROAD STAMFORD CT 06903	05/23/2013	05/23/2018
DOL	DOL		ROBERT TORDELLA		125 CHAUTAUQUA AVENUE LAKEWOOD NY 14750	06/24/2015	06/24/2020
DOL	DOL	*****3859	ROCHESTER ACOUSTICAL CORP		P O BOX 799 HILTON NY 14468	02/19/2016	02/19/2021
DOL	NYC		RODNEY SCOTT		201 HEMPSTEAD AVENUE WEST HEMPSTEAD NY 11552	10/30/2015	10/30/2020
DOL	DOL		ROMEO WARREN		161 ROBYN RD MONROE NY 10950	09/16/2013	09/15/2019
DOL	DOL		ROMEO WARREN		161 ROBYN RD MONROE NY 10950	01/30/2018	01/30/2023
DOL	DOL		ROSS J MUSCOLINO		10 ST CHARLES STREET THORNWOOD NY 10594	09/03/2013	09/03/2018
DOL	DOL		RYAN ALBIE		21 S HOWELLS POINT ROAD BELLPORT NY 11713	02/21/2017	02/21/2022
DOL	DOL	*****3347	RYAN ALBIE CONTRACTING INC		21 S HOWELLS POINT ROAD BELLPORT NY 11713	02/21/2017	02/21/2022
DOL	DOL		S & S ELECTRIC		235 BROADWAY SCHENECTADY NY 12306	06/19/2013	06/19/2018

DOL	NYC		SABIR MUHAMMED		SUITE B-8 782 PELHAM PARKWAY SOUTHBRONX NY 10462	04/21/2016	04/21/2021
DOL	NYC		SAEED HASAN		4558 BROADWAY #6 NEW YORK NY 10040	08/04/2014	08/04/2019
DOL	NYC	*****2117	SCOTT ELECTRICAL LLC		201 HEMPSTEAD AVENUE WEST HEMPSTEAD NY 11552	10/30/2015	10/30/2020
DOL	DOL	*****9751	SCW CONSTRUCTION		544 OLD ROUTE 23 ACRE NY 12405	02/14/2017	02/14/2022
DOL	DOL		SEAKCO CONSTRUCTION COMPANY LLC		128A NORTH STAMFORD ROAD STAMFORD CT 06903	05/23/2013	05/23/2018
DOL	DOL	*****9030	SEAKCO NEW YORK LLC	SEAKCO CONSTRUCTI ON COMPANY	128A NORTH STAMFORD ROAD STAMFORD CT 06903	05/23/2013	05/23/2018
DOL	DOL		SEAN BURBAGE	C/O SEAN BURBAGE CORP	445 ROOSA GAP ROAD BLOOMINGBURG NY 12721	04/14/2014	04/14/2019
DOL	DOL	*****6586	SEAN BURBAGE CORP		445 ROOSA GAP ROAD BLOOMINGBURG NY 12721	04/14/2014	04/14/2019
DOL	AG		SERGIO RAYMUNDO		109 DUBOIS RD. NEW PALTZ NY 12561	05/20/2016	05/20/2021
DOL	DOL	*****6904	SIGNING STAR LIMITED LIABILITY COMPANY		5 HANSEN PLACE WAYNE NJ 07470	09/18/2013	09/18/2018
DOL	DOL	*****4025	SOLUTION MATTERS INC		198 NORWOOD ROAD PORT JEFFERSON NY 11776	11/19/2015	11/19/2020
DOL	NYC	*****4934	SPHINX CONTRACTING CORP		240 HOME STREET TEANECK NJ 07666	08/04/2014	08/04/2019
DOL	DOL	*****3496	STAR INTERNATIONAL INC		89-51 SPRINGFIELD BLVD QUEENS VILLAGE NY 11427	08/11/2003	08/11/3003
DOL	DOL		STEPHEN BIANCHI		462 LAKEVIEW AVENUE VALHALLA NY 10595	12/16/2013	12/16/2018
DOL	DOL	*****9751	STEPHEN C WAGAR		544 OLD ROUTE 23 ACRE NY 12405	02/14/2017	02/14/2022
DOL	DOL		STEPHEON SHELDON	FANTASTIC PAINTING	493 LANSING ROAD FULTONVILLE NY 12072	11/18/2013	11/18/2018
DOL	DOL		STEVEN P SUCATO		15-68 208TH STREET BAYSIDE NY 11360	06/23/2016	06/23/2021
DOL	DOL		STEVEN SAGGESE		3005 WYNSUM AVENUE MERRICK NY 11566	08/18/2014	08/18/2019
DOL	DOL		STEVEN TESTA		50 SALEM STREET - BLDG B LYNNFIELD MA 01940	01/23/2017	01/23/2022
DOL	DOL		STUART CHAITIN		634 ROUTE 303 BLAUVET NY 10913	07/26/2012	11/19/2018
DOL	NYC	*****9432	SUBLINK LTD		346 THIRD AVENUE PELHAM NY 10803	11/19/2015	11/19/2020
DOL	DOL		SUZANNE G GOLD	C/O GOLDS FLOORING INSTALLATION S INC	25 HAMILTON ROAD MONTICELLO NY 12701	10/16/2013	10/16/2018
DOL	DOL	*****7441	T & T CONCRETE INC		2560 HAMBURG TURNPIKE P O BOX 367LACKAWANNA NY 14218	07/08/2015	07/08/2020
DOL	DOL	*****7417	TADCO CONSTRUCTION		101-61 99TH STREET OZONE PARK NY 11416	02/15/2017	02/15/2022
DOL	DOL		TADCO CONSTRUCTION		101-61 99TH STREET OZONE PARK NY 11416	02/15/2017	02/15/2022
DOL	DOL	*****7417	TADCO CONSTRUCTION CORP		101-61 99TH STREET OZONE PARK NY 11416	02/15/2017	02/15/2022
DOL	DOL		TALAILA OCAMPA		1207 SW 48TH TERRACE DEERFIELD BEACH FL 33442	01/16/2018	01/16/2023
DOL	DOL		TAMMY LACITIGNOLA		C/O CATSKILL FENCE INSTAL 5445 ROUTE 32CATSKILL NY 12414	08/22/2014	08/22/2019
DOL	DOL	*****9852	TAP STEEL INC		ROUTE 26 3101 P O BOX 457CONSTABLEVILLE NY 13325	01/28/2016	01/28/2021
DOL	DOL		TECH-MECHANICAL FAB DC INC		5 PARKER AVENUE POUGHKEEPSIE NY 12601	03/25/2014	03/25/2019
DOL	DOL	*****5570	TESTA CORP		50 SALEM STREET - BLDG B LYNNFIELD MA 01940	01/23/2017	01/23/2022
DOL	DOL	*****0887	THE BRINSON PAINTING CORPORATION		72 TAUNTON PLACE BUFFALO NY 14216	04/14/2015	04/14/2020
DOL	DOL	*****8174	THE DALRYMPLE CORPORATION		UNIT 278 541 10TH STREET NWATLANTA GA 30318	12/01/2015	12/01/2020
DOL	DOL	*****8174	THE DALRYMPLE GROUP LLC		289 JONESBORO RD/ STE 216 MCDONOUGH GA 30253	12/01/2015	12/01/2020

DOL	DOL	*****2070	THE UNIVERSAL GROUP OF NEW YORK INC		212 OXFORD WAY SCHENECTADY NY 12309	12/11/2012	09/16/2018
DOL	DOL	*****9243	THE WELCOME MAT PROPERTY MANAGEMENT LLC		P O BOX 268 STILLWATER NY 12170	09/16/2013	03/21/2019
DOL	DOL		THOMAS DESANTIS	DESANTIS ENTERPRISES	161 OSWEGO RIVER ROAD PHOENIX NY 13135	09/24/2013	11/18/2018
DOL	NYC		THOMAS SCARINCI		130-43 92ND AVENUE RICHMOND HILLS NY 11418	11/27/2013	11/27/2018
DOL	DOL		TIMOTHY A PALUCK		C/O TAP STEEL INC RTE 26 3101/ P O BOX 457CONSTABLEVILLE NY 13325	01/28/2016	01/28/2021
DOL	DOL		TIMOTHY F BARBER		635 LUZERNE ROAD QUEENSBURY NY 12804	09/16/2013	09/16/2018
DOL	NYC	*****1523	TM MECHANICAL CORP		130-43 92ND AVENUE RICHMOND HILLS NY 11418	11/27/2013	11/27/2018
DOL	DOL	*****0600	TOMSON ALLOYS RECYCLING INC		143 FILLMORE AVENUE BUFFALO NY 14210	01/08/2015	01/08/2020
DOL	DOL	*****3453	TORCHIA'S HOME IMPROVEMENT		10153 ROBERTS RD SAUQUOIT NY 13456	08/09/2016	08/09/2021
DOL	DOL	*****6914	TRI-COUNTY RESTORATIONS & CONSTRUCTION INC		13 SUMMERSET DRIVE WALLKILL NY 12589	08/22/2014	08/22/2019
DOL	DOL		TRI-COUNTY RESTORATIONS INC		392 ROCK CUT ROAD WALDEN NY 12586	08/22/2014	08/22/2019
DOL	DOL	*****8311	TRIPLE B FABRICATING, INC.		61 WILLETT ST. PASSAIC NJ 07503	10/26/2016	10/26/2021
DOL	DOL	*****9407	TURBO GROUP INC		15-68 208TH STREET BAYSIDE NY 11360	06/23/2016	06/23/2021
DOL	AG	*****6490	UNIVERSAL STEEL FABRICATORS INC		90 JUNIUS STREET BROOKLYN NY 11212	01/23/2014	01/23/2019
DOL	NYC	*****7174	V&R CONTRACTING		P O BOX 957 PORT JEFFERSON STA NY 11776	03/12/2014	03/12/2019
DOL	NYC		VALERIE VISCONTI		346 THIRD AVENUE PELHAM NY 10803	11/19/2015	11/19/2020
DOL	NYC		VEAP SELA	C/O COLONIAL ROOFING COMPANY INC	247 48TH STREET BROOKLYN NY 11220	02/05/2014	02/05/2019
DOL	NYC		VICK CONSTRUCTION		21 DAREWOOD LANE VALLEY STREAM NY 11581	12/31/2013	12/31/2018
DOL	NYC		VICKRAM MANGRU	VICK CONSTRUCTI ON	21 DAREWOOD LANE VALLEY STREAM NY 11581	12/31/2013	12/31/2018
DOL	DOL		VICTOR ROTENBERG		C/O GMDV TRANS INC 67048 182ND STREETFRESH MEADOWS NY 11365	06/24/2016	06/24/2021
DOL	NYC		VINCENT PIZZITOLA		P O BOX 957 PORT JEFFERSON STA NY 11776	03/12/2014	03/12/2019
DOL	NYC		VITO GARGANO		1535 RICHMOND AVE STATEN ISLAND NY 10314	12/13/2017	12/13/2022
DOL	DOL		WAYNE LIVINGSTON JR	NORTH COUNTRY DRYWALL AND PAINT	23167 COUNTY ROUTE 59 DEXTER NY 13634	10/24/2016	10/24/2021
DOL	DOL		WESLEY J STAROBA		206 TALLY HO COURT SCHENECTADY NY 12303	06/19/2013	06/19/2018
DOL	DOL	*****0078	WESLEY J STAROBA INC	S & S ELECTRIC	235 BROADWAY SCHENECTADY NY 12306	06/19/2013	06/19/2018
DOL	DOL		WILLIAM CONKLIN		5 PARKER AVENUE POUGHKEEPSIE NY 12601	03/25/2014	03/25/2019
DOL	DOL		WILLIAM DEAK		C/O MADISON AVE CONSTR CO 39 PENNY STREETWEST ISLIP NY 11795	11/02/2016	11/02/2021
DOL	DOL		WILLIAM MAZZELLA		134 MURRAY AVENUE YONKERS NY 10704	02/03/2014	02/03/2019
DOL	DOL		WILLIE BRINSON		72 TAUNTON PLACE BUFFALO NY 14216	04/14/2015	04/14/2020
DOL	DOL	*****6195	WILSON BROTHER DRYWALL CONTRACTORS		36 ABERSOLD STREET ROCHESTER NY 14621	08/31/2015	08/31/2020
DOL	DOL	*****4043	WINDSHIELD INSTALLATION NETWORK, INC.		200 LATTA BROOK PARK HORSEHEADS NY 14845	03/08/2018	03/08/2023
DOL	DOL	*****7345	YES SERVICE AND REPAIRS CORPORATION		145 LODGE AVE HUNTINGTON STATION NY 11476	08/09/2016	08/09/2021

DOL	DOL		YURIY IVANIN		C/O MOUNTAIN'S AIR INC 2471 OCEAN AVENUE-STE 7ABROOKLYN NY 11229	09/24/2012	09/18/2020

U.S. Department of Labor
Wage and Hour Division

PAYROLL

(For Contractor's Optional Use; See Instructions at www.dol.gov/whd/forms/wh347instr.htm)

Persons are not required to respond to the collection of information unless it displays a currently valid OMB control number.

U.S. Wage and Hour Division

Rev. Dec. 2008

NAME OF CONTRACTOR ☐ OR SUBCONTRACTOR ☐	ADDRESS	OMB No.: 1235-0008 Expires: 02/28/2018

PAYROLL NO.	FOR WEEK ENDING	PROJECT AND LOCATION	PROJECT OR CONTRACT NO.

(1) NAME AND INDIVIDUAL IDENTIFYING NUMBER (e.g., LAST FOUR DIGITS OF SOCIAL SECURITY NUMBER) OF WORKER	(2) NO. OF WITHHOLDING EXEMPTIONS	(3) WORK CLASSIFICATION	OT. OR ST.	(4) DAY AND DATE / HOURS WORKED EACH DAY							(5) TOTAL HOURS	(6) RATE OF PAY	(7) GROSS AMOUNT EARNED	(8) DEDUCTIONS FICA	WITH-HOLDING TAX			OTHER	TOTAL DEDUCTIONS	(9) NET WAGES PAID FOR WEEK
			O																	
			S																	
			O																	
			S																	
			O																	
			S																	
			O																	
			S																	
			O																	
			S																	
			O																	
			S																	
			O																	
			S																	
			O																	
			S																	

While completion of Form WH-347 is optional, it is mandatory for covered contractors and subcontractors performing work on Federally financed or assisted construction contracts to respond to the information collection contained in 29 C.F.R. §§ 3.3, 5.5(a). The Copeland Act (40 U.S.C. § 3145) contractors and subcontractors performing work on Federally financed or assisted construction contracts to "furnish weekly a statement with respect to the wages paid each employee during the preceding week." U.S. Department of Labor (DOL) regulations at 29 C.F.R. § 5.5(a)(3)(ii) require contractors to submit weekly a copy of all payrolls to the Federal agency contracting for or financing the construction project, accompanied by a signed "Statement of Compliance" indicating that the payrolls are correct and complete and that each laborer or mechanic has been paid not less than the proper Davis-Bacon prevailing wage rate for the work performed. DOL and federal contracting agencies receiving this information review the information to determine that employees have received legally required wages and fringe benefits.

Public Burden Statement

We estimate that is will take an average of 55 minutes to complete this collection, including time for reviewing instructions, searching existing data sources, gathering and maintaining the data needed, and completing and reviewing the collection of information. If you have any comments regarding these estimates or any other aspect of this collection, including suggestions for reducing this burden, send them to the Administrator, Wage and Hour Division, U.S. Department of Labor, Room S3502, 200 Constitution Avenue, N.W. Washington, D.C. 20210

(over)

Date _____

I, _____ _____
(Name of Signatory Party) (Title)

do hereby state:

(1) That I pay or supervise the payment of the persons employed by

_____ on the
(Contractor or Subcontractor)

_____; that during the payroll period commencing on the
(Building or Work)

_____ day of _____, _____, and ending the _____ day of _____, _____,

all persons employed on said project have been paid the full weekly wages earned, that no rebates have been or will be made either directly or indirectly to or on behalf of said

_____ from the full
(Contractor or Subcontractor)

weekly wages earned by any person and that no deductions have been made either directly or indirectly from the full wages earned by any person, other than permissible deductions as defined in Regulations, Part 3 (29 C.F.R. Subtitle A), issued by the Secretary of Labor under the Copeland Act, as amended (48 Stat. 948, 63 Stat. 108, 72 Stat. 967; 76 Stat. 357; 40 U.S.C. § 3145), and described below:

_____

_____

_____

_____

(2) That any payrolls otherwise under this contract required to be submitted for the above period are correct and complete; that the wage rates for laborers or mechanics contained therein are not less than the applicable wage rates contained in any wage determination incorporated into the contract; that the classifications set forth therein for each laborer or mechanic conform with the work he performed.

(3) That any apprentices employed in the above period are duly registered in a bona fide apprenticeship program registered with a State apprenticeship agency recognized by the Bureau of Apprenticeship and Training, United States Department of Labor, or if no such recognized agency exists in a State, are registered with the Bureau of Apprenticeship and Training, United States Department of Labor.

(4) That:

(a) WHERE FRINGE BENEFITS ARE PAID TO APPROVED PLANS, FUNDS, OR PROGRAMS

☐ – in addition to the basic hourly wage rates paid to each laborer or mechanic listed in the above referenced payroll, payments of fringe benefits as listed in the contract have been or will be made to appropriate programs for the benefit of such employees, except as noted in section 4(c) below.

(b) WHERE FRINGE BENEFITS ARE PAID IN CASH

☐ – Each laborer or mechanic listed in the above referenced payroll has been paid, as indicated on the payroll, an amount not less than the sum of the applicable basic hourly wage rate plus the amount of the required fringe benefits as listed in the contract, except as noted in section 4(c) below.

(c) EXCEPTIONS

EXCEPTION (CRAFT)	EXPLANATION

REMARKS:

NAME AND TITLE	SIGNATURE

THE WILLFUL FALSIFICATION OF ANY OF THE ABOVE STATEMENTS MAY SUBJECT THE CONTRACTOR OR SUBCONTRACTOR TO CIVIL OR CRIMINAL PROSECUTION. SEE SECTION 1001 OF TITLE 18 AND SECTION 231 OF TITLE 31 OF THE UNITED STATES CODE.

TO THE TOWN BOARD, TOWN OF RIVERHEAD, 200 HOWELL AVENUE, SUFFOLK COUNTY, NEW YORK, ACTING FOR AND ON BEHALF OF THE RIVERHEAD SEWER DISTRICT:

For all work included under the following contract: 841 OLD COUNTRY ROAD SEWER MAIN & EASEMENT RELOCATION, CONTRACT NO. RDSD 18-01, SEWER CONSTRUCTION.

Made this ___day of _____, 201_, by

_____

(BIDDER'S NAME)

BIDDER'S DECLARATION: The undersigned, as Bidder, declares that the only person or persons interested in this bid or proposal as principal or principals is or are named herein; and that no other person than herein named has any interest in this proposal or in the contract proposed to be taken; that this bid or proposal is made without any connections with any other person or persons making a bid or proposal for the same purpose; that the bid or proposal is in all respects fair and without collusion or fraud; that it has examined the site of the work, the Contract and Specifications and the Drawings referred to; and has read the Notice to Bidders, Information for Bidders and General Conditions hereto attached and fully understands all the same; and it proposes and agrees, if this proposal is accepted, it will contract with the TOWN BOARD of the TOWN OF RIVERHEAD in the Contract accompanying this bid to perform all the work required in accordance with the Plans and as mentioned in said foregoing Information for Bidders, General Conditions, Notice to Bidders, Contract and Specifications; and it will accept in full payment therefor the following sums to wit:

NOTE: THIS FORM MUST BE COMPLETED BY BIDDER

COPYRIGHT © 2018 BY H2M. ALL RIGHTS RESERVED.
NO PART OF THIS DOCUMENT MAY BE REPRODUCED OR DISTRIBUTED IN ANY FORM OR BY ANY MEANS WITHOUT THE PRIOR WRITTEN CONSENT OF H2M ARCHITECTS + ENGINEERS, MELVILLE, NEW YORK, USA.

A: SCH | PM: NBONO@H2M.COM | LSB: JAMES J. FUCHS |
LSD: 7/9/2018 3:10 PM | LPD: 7/9/2018 3:10 PM | 15 MAY 2009| R#: 27 | P: 1 |
X:\RDSD (RIVERHEAD SEWER DISTRICT) - 10805\RDSD1801 841 OLD COUNTRY RD DESIGN\02-SPECS\0-FRONTEND\05 PROPOSAL FORM - A - RDSD 1801.DOC | PROPOSAL | RDSD 18-01 |

TOWN OF RIVERHEAD / RIVERHEAD SEWER DISTRICT
841 OLD COUNTRY ROAD SEWER MAIN & EASEMENT RELOCATION
CONTRACT No. RDSD 18-01

Gentlemen:

The undersigned hereby offers to furnish all labor, equipment, materials, and appurtenances for the **841 Old Country Road Sewer Main & Easement Relocation, Contract S: Sewer Construction** all in accordance with the plans and specifications prepared by H2M architects + engineers.

TOTAL BASE BID:

For all work shown, specified and described in the Contract Documents, for the **841 Old Country Road Sewer Main & Easement Relocation, Contract S: Sewer Construction,** Contract No. RDSD 18-01, on behalf of the Riverhead Sewer District, complete and ready for operation, including the total of the cash allowances of Five Thousand Dollars and Zero Cents ($5,000.00), as specified in Section 012100 – Allowances, for the Total Base Bid of:

LUMP SUM PRICE _____($_____)
(In Words) (In Numerals)

NOTE: THIS FORM MUST BE COMPLETED BY BIDDER

ALL WORK SHOWN AND SPECIFIED IN THE CONTRACT DOCUMENTS AND INCLUDED IN THE BID SHALL BE COMPLETED WITHIN ONE HUNDRED (100) CONSECUTIVE CALENDAR DAYS (SATURDAYS, SUNDAYS AND HOLIDAYS INCLUDED) STARTING TEN DAYS AFTER THE DATE THE OWNER EXECUTED THE CONTRACT. THE COMPLETION DATE WILL BE SET IN THE NOTICE TO PROCEED.

A NOTICE TO PROCEED WILL BE ISSUED AFTER THE CONTRACT HAS BEEN EXECUTED BY THE OWNER.

FAILURE OF THE CONTRACTOR TO COMPLETE ALL WORK SHOWN AND SPECIFIED IN THE CONTRACT DOCUMENTS, BY THE ABOVE SPECIFIED TIME, SHALL SUBJECT HIM/HER TO LIQUIDATED DAMAGES, AS SET FORTH IN ARTICLE 7 OF THE CONTRACT, IN THE SUM OF ONE THOUSAND DOLLARS AND ZERO CENTS ($1,000.00) PER CALENDAR DAY.

THE TOWN BOARD RESERVES THE RIGHT TO AWARD THIS CONTRACT OR TO REJECT ANY AND ALL BIDS.

EXCESS COSTS FOR ENGINEERING & INSPECTION

SPECIFIC DAMAGES WILL BE ASSESSED AND DEDUCTED FROM AMOUNTS OTHERWISE DUE THE CONTRACTOR FOR ADDITIONAL INSPECTION AND CONTRACT MANAGEMENT TIME REQUIRED BEYOND THE CONTRACT COMPLETION PERIOD SPECIFIED ABOVE. SUCH DEDUCTION SHALL BE NO LESS THAN SIXTY FIVE DOLLARS ($65.00) PER HOUR AND NO MORE THAN TWO HUNDRED DOLLARS ($200.00) PER HOUR IN ACCORDANCE WITH THE ENGINEER'S STANDARD BILLING RATE SCHEDULE IN EFFECT WITH THE OWNER AT THE TIME BASED ON CLASSIFICATION OF STAFF.

IN ADDITION, THE OWNER WILL CHARGE TO THE CONTRACTOR, AND WILL DEDUCT FROM THE PARTIAL AND FINAL PAYMENTS DUE THE CONTRACTOR, ALL EXCESS ENGINEERING, INSPECTION, LEGAL AND TESTING CHARGES AND EXPENSES INCURRED BY THE DISTRICT AS STIPULATED BELOW:

1. SERVICES AND OTHER SIMILAR CHARGES AS A RESULT OF THE CONTRACTOR'S AND SUBCONTRACTOR'S ERRORS, OMISSIONS OR FAILURE TO CONFORM TO THE REQUIREMENTS OF THE CONTRACT DOCUMENTS.

2. SERVICES AND OTHER SIMILAR CHARGES REQUIRED TO EXAMINE AND EVALUATE ANY CHANGES OR ALTERNATES PROPOSED BY THE CONTRACTOR AND WHICH MAY VARY FROM THE CONTRACT DOCUMENTS.
3. SERVICES AND OTHER SIMILAR CHARGES AS A RESULT OF THE CONTRACTOR'S PROPOSED SUBSTITUTION OF MATERIALS, EQUIPMENT OR PRODUCTS WHICH REQUIRE A REDESIGN OF ANY PORTION OF THE PROJECT, AS CONTAINED IN THE CONTRACT DOCUMENTS AT THE TIME OF BID.
4. SERVICES AND OTHER SIMILAR CHARGES AS A RESULT OF THE CONTRACTOR'S PROPOSED SUBSTITUTION OF PRODUCTS WHICH REQUIRE AN ENGINEERING EVALUATION TO DETERMINE IF THE SUBSTITUTED PRODUCT IS EQUAL TO THAT SPECIFIED.
5. SERVICES AND OTHER SIMILAR CHARGES AS A RESULT OF CHANGES BY THE CONTRACTOR TO DIMENSIONS, WEIGHTS, SIZES, VOLTAGES, PHASE, HORSEPOWERS, MATERIALS OF CONSTRUCTION, AND SIMILAR PHYSICAL OR OPERATING CHARACTERISTICS OF THE PRODUCT FURNISHED WHICH REQUIRE REDESIGN OF THE PROJECT IN ANY WAY.
6. SERVICES AND OTHER SIMILAR CHARGES FOR THE REVIEW OF RESUBMISSIONS OF SHOP DRAWINGS THAT HAVE BEEN MARKED AS "NO EXCEPTIONS TAKEN" OR "MAKE CORRECTIONS NOTED".
7. SERVICES AND OTHER SIMILAR CHARGES FOR THE REVIEW OF SHOP DRAWINGS SUBMITTED MORE THAN THREE (3) TIMES FOR THE SAME PRODUCT OR PORTION OF THE WORK.
8. SERVICES AND OTHER SIMILAR CHARGES IN CONNECTION WITH ANY WORK PERFORMED PAST THE SPECIFIED WORKING HOURS WHICH WILL BE INVOICED TO THE OWNER AT 1.15 TIMES THE ENGINEER'S STANDARD HOURLY BILLING RATE.
9. ENGINEERING AND LEGAL SERVICES, AND SIMILAR CHARGES AS A RESULT OF THE CONTRACTOR NOT COMPLETING ALL THE WORK WITHIN THE SPECIFIED COMPLETION TIME WHICH SHALL NOT BE CONSIDERED AS PART OF THE LIQUIDATED DAMAGES SPECIFIED ABOVE.

BIDDER'S PRINTED NAME & SIGNATURE:

_____

(Print Name)

_____

(Signature)

NOTE: THIS FORM MUST BE COMPLETED BY BIDDER

THE UNDERSIGNED HEREBY ACKNOWLEDGES RECEIPT OF THE FOLLOWING ADDENDA (IF ANY):

Addendum No.	Dated
_____	_____
_____	_____
_____	_____

Signature of person, firm or corporation making this proposal:

_____
(Contractor)

_____
(Title)

Mail Address: _____

Telephone No.:_____ Dated:_____

The full names and address of all persons interested in the Proposal or principals are as follows:

Name	Address

NOTE: THIS FORM MUST BE COMPLETED BY BIDDER (IF NONE WERE RECEIVED THEN WRITE THE WORD "NONE").

The Town Board reserves the right to award this contract to the lowest qualified bidder and to reject and declare invalid any or all bids deemed not in the best interest of the Town. In awarding this contract, the Town is not bound by the quantities stated in the Bid Form. It is emphasized that the quantities are approximations only. No guarantee is made for any quantities stated nor is a guarantee made as to the total bid. Such total bid is for the purpose of guidance in awarding the contract only. Payment shall be on the basis of actual work done at the bid prices quoted.

On acceptance of this bid, the undersigned binds himself or themselves to enter into a written contract with the Town not later than fourteen (14) days after the date of notice of the acceptance of his bid and to furnish the required security for faithful performance of the terms of said contract and the insurance as required by the Conditions of contract, and to process the work diligently so as to complete all the work required under this contract within the time frame as dictated by the Town Board or their representative.

PROPOSAL CERTIFICATION

THIS BID IS HEREBY SUBMITTED BY:

DATED: _____

NAME OF BIDDER: _____

BIDDER'S ADDRESS: _____

_____

_____

SIGNED BY:_____

PRINTED NAME & TITLE: _____

BIDDER'S TELEPHONE NO.: (DAY):_____

(NIGHT):_____

FAX:_____

BIDDER'S EMAIL ADDRESS: _____

FEDERAL ID NO. OR SOCIAL SECURITY No.:_____

NOTE: THIS FORM MUST BE COMPLETED BY BIDDER

Enclose certified check or bid bond for five percent (5%) of the bid total as stipulated in the foregoing Information for Bidders.

The Bidder hereby agrees to enter into a Contract within fourteen (14) days (Saturdays and Sundays excepted) after due notice from the Town Board, Town of Riverhead, that the Contract has been awarded to it and is ready for signature; such notice to be given in writing within ninety (90) days of opening of the bids and, on the signing of such Contract by the Bidder, to furnish the indemnifying bonds as provided in the Contract.

The Bidder hereby further agrees that in the event of its failure or refusal to enter into a contract in accordance with this bid within fourteen (14) days after due notice from the Town Board that the Contract has been awarded to it and is ready for signature, as given in accordance with the Information for Bidders and/or its failure to execute and deliver the bond for the full amount of the Contract price, as provided in said Information for Bidders, the Bidder's check or bid bond which is herewith deposited with the Town Board shall (at the option of said Board) become due and payable as ascertained and liquidated damages for such default; otherwise, said check or bid bond will be returned to the undersigned.

The full names and residences of all persons and parties interested in the foregoing bid as principals are as follows:

NAME	ADDRESS
_____	_____
_____	_____
_____	_____

NAME OF BIDDER:

BUSINESS ADDRESS OF BIDDER:

DATED AT: _____THE _____ DAY OF _____, 201____

NOTE: THIS FORM MUST BE COMPLETED BY BIDDER

FORM OF BID BOND, PAYMENT BONDS AND PERFORMANCE BONDS

The Form of Bid Bond shall be AIA Document A310.

The Form of Labor and Material Payment Bond shall be AIA Document A311.

The Form of Performance Bond and Payment Bond shall be AIA Document A312.

COPYRIGHT © 2018 BY H2M. ALL RIGHTS RESERVED.
NO PART OF THIS DOCUMENT MAY BE REPRODUCED OR DISTRIBUTED IN ANY FORM OR BY ANY MEANS WITHOUT THE PRIOR WRITTEN CONSENT OF H2M ARCHITECTS + ENGINEERS, MELVILLE, NEW YORK, USA.

A: SCH | PM: NICHOLAS F. BONO | LSB: JAMES J. FUCHS |
LSD: 7/9/2018 3:13 PM | LPD: 7/9/2018 3:13 PM | 15 MAY 2009| R#: 19 | P: 2 |
X:\RDSD (RIVERHEAD SEWER DISTRICT) - 10805\RDSD1801 841 OLD COUNTRY RD DESIGN\02-SPECS\0-FRONTEND\07 PROPOSAL FORM - C - RDSD 1602.DOC | PROPOSAL | RDSD 18-01 |

NON-COLLUSIVE BIDDING CERTIFICATE

As per Chapter 751 of the Laws of 1965, an amendment to the General Municipal Law sponsored by the New York State Department of Law, all bids, proposals and contracts awarded or accepted by a municipality must contain a statement of non-collusion. By submission of this bid or proposal, the bidder certifies that:

(A) This bid or proposal has been independently arrived at without collusion with any other bidder or with any competitor or potential competitor;

(B) This bid or proposal has not been knowingly disclosed and will not be knowingly disclosed prior to the opening of bids or proposals for this project to any other bidder, competitor or potential competitor;

(C) No attempt has been or will be made to induce any other person, partnership or corporation to submit or not to submit a bid or proposal;

(D) The person signing this bid or proposal certifies that he has fully informed himself regarding the accuracy of the statements contained in this certification and under the penalties of perjury, affirms the truth thereof such penalties being applicable to the bidder as well as to the person signing in its behalf;

(E) That attached hereto (if corporation bidder) is a certified copy of resolution authorizing the execution of this certificate by the signature of this bid or proposal in behalf of the corporate bidder.

Resolved that _____be authorized
(Name of Corporation)
to sign and submit the bid or proposal of this corporation for the following project:

_____

_____
(Describe Project)

and to submit in such bid or proposal the certificate as to non-collusion required by Section One Hundred Three D (103-D) of the General Municipal Law as the act and deed of such corporation and for any inaccuracies or misstatements in such certificates, this corporate bidder shall be liable under the penalties of perjury.

The following is a true and correct copy of the resolution adopted by:

_____

Corporation at a meeting of its Board of Directors on the _____ day of _____, 201 ___.

(Seal of Corporation)

_____
Secretary

Legal name of person, firm or corporation making this Bid:

_____

Dated:_____

(Bidder's Seal)

NOTES:

(1) Where a bidder is a firm, the bid must be signed in the name of the firm by a member of the firm who must sign his own name immediately thereunder as _____, Partner.

(2) Where a bidder is a corporation, the bid must be signed in the name of the corporation by a duly authorized officer or agent thereof having knowledge of the matters stated in the bid and such officer or agent shall also subscribe his own name, the office he holds, and the seal of the corporation must be affixed.

(3) The bid must be sworn to by the person signing it, using one of the appropriate forms of acknowledgement that follow.

(4) The bidders shall date the Form of Affidavit, fill in all blank spaces and complete the "Questionnaire" which follows as part of the bid.

(5) In case of any discrepancy in the bidder's extensions or total, the Town Engineer's computation of extensions and totals will govern.

FORM OF AFFIDAVIT WHERE BIDDER IS AN INDIVIDUAL

STATE OF)
) ss.:
COUNTY OF)

_____, being duly sworn, deposes and says: I am the person described in and who executed the foregoing bid and the several matters therein state are in all respects true.

_____
(Signature of person who signed bid)

Subscribed and sworn to before me this
_____ day of _____, 201___.

_____
(Notary Public)

FORM OF AFFIDAVIT WHERE BIDDER IS A FIRM

STATE OF)
) ss.:
COUNTY OF)

_____ being duly sworn, deposes and says: I am a member of

_____, the firm described in and which executed the foregoing bid. I subscribed the name of the firm thereto on behalf of said firm, and the several matters therein stated in all respects are true.

_____
(Signature of person who signed bid)

Subscribed and sworn to before me:

this _____ day of _____, 201__.

_____
(Notary Public)

FORM OF AFFIDAVIT WHERE BIDDER IS A CORPORATION

STATE OF)
) ss.:
COUNTY OF)

_____being duly sworn, deposes and says: I am the _____ of _____ the above named corporation, whose name is subscribed to and which executed the foregoing bid. I reside at _____, State of _____. I have knowledge of the several matters therein stated and they are in all respects true.

_____
(Signature of person who signed bid)

Subscribed and sworn to before me this _____

day of _____, 201___.

_____
(Notary Public)

BIDDER MUST SIGN THIS FORM BEFORE A NOTARY PUBLIC

Bid or Contract Number _____

STATE OF)
) ss.:
COUNTY OF)

That in connection with the above bid or contract of _____ I _____ the *(applicable herein), (an officer or agent of the corporate applicant, namely its _____), swears or affirms under the penalties of perjury, that no other person will have any direct or indirect interest in this proposal except _____ (in case of a corporation, all officers of the corporation and stockholders owning more than 5% of the corporation and stock must be listed. Use separate sheet in necessary.)

That *(none of the officers or stockholders are) related to any officer or employee of the Town of Riverhead except _____
_____.
That there is not any state or local officer or employee or a member of a board of commissioners of a local public authority or other public corporation within the county (exclusive of a volunteer fireman or civil defense volunteer) interested in such application.

_____
(Signature)

Sworn to before me this _____
day of _____, 201____.

_____
(Notary Public)

*Cross out phrase not appropriate.

NOTE: It is not forbidden that individuals working for the Town of Riverhead or other municipality bid on contracts but only that such interest be revealed when they do bid.

NOTE: THIS FORM MUST BE COMPLETED BY BIDDER

COPYRIGHT © 2018 BY H2M. ALL RIGHTS RESERVED.
NO PART OF THIS DOCUMENT MAY BE REPRODUCED OR DISTRIBUTED IN ANY FORM OR BY ANY MEANS WITHOUT THE PRIOR WRITTEN CONSENT OF H2M ARCHITECTS + ENGINEERS, MELVILLE, NEW YORK, USA.

A: SHEARL@H2M.COM | PM: NBONO@H2M.COM | LSB: JAMES J. FUCHS |
LSD: 7/9/2018 3:14 PM | LPD: 7/9/2018 3:14 PM | 15 MAY 2009| R#: 19 | P: 6 |
X:\RDSD (RIVERHEAD SEWER DISTRICT) - 10805\RDSD1801 841 OLD COUNTRY RD DESIGN\02-SPECS\0-FRONTEND\08 PROPOSAL FORM - D - RDSD 1602.DOC | PROPOSAL | RDSD 18-01 |

RIVERHEAD SEWER DISTRICT

TOWN OF RIVERHEAD **NEW YORK**

The District may make such investigations as the District deems necessary to determine the responsibility of any Bidder or to determine the ability of any Bidder to perform the Work. Bidders shall furnish to the District all information and data required by the District, including complete financial data, within the time and in the form and manner required by the District. The District reserves the right to reject any bid if the evidence required by the District is not submitted as required or if the evidence submitted by or the investigation of any Bidder fails to satisfy the District that the Bidder is responsible, or is able or qualified to carry out the obligations of the Contract or to complete the Work as contemplated.

At the discretion of the District, the Bidder may be required to complete and submit the enclosed New York State Vendor Responsibility Questionnaire to assist in determining the Bidder's qualifications. If requested, it shall be submitted within five (5) working days from notice.

The bidder shall complete the following list. The list shall include projects of similar size and nature (i.e. length of pipe liner installation, prime contract dollar amount) and type (i.e. municipal wastewater force main and gravity sewer work in various road right-of-ways and easement boundaries). The list of projects shall demonstrate the Bidder's experience with construction methods, and construction procedures. The list shall only include projects which have been completed by the Bidder as the prime contractor, and which have been in operation for a period of not less than one year. A minimum of five such projects shall be provided.

Project No. 1 (This project must show the bidder's experience with Town of Riverhead roadways).

Project Title: _____

Owner: _____

Owner Contact Name and Phone Number: _____

Location: _____

Engineer's Name and Telephone Number: _____

General Description: _____

Contract Amount: _____

Project No. 2

Project Title: _____

Owner: _____

Owner Contact Name and Phone Number: _____

Location: _____

Engineer's Name and Telephone Number: _____

General Description: _____

Contract Amount: _____

Project No. 3

Project Title: _____

Owner: _____

Owner Contact Name and Phone Number: _____

Location: _____

Engineer's Name and Telephone Number: _____

General Description: _____

Contract Amount: _____

Project No. 4

Project Title: _____

Owner: _____

Owner Contact Name and Phone Number: _____

Location: _____

Engineer's Name and Telephone Number: _____

General Description: _____

Contract Amount: _____

Project No. 5

Project Title: _____

Owner: _____

Owner Contact Name and Phone Number: _____

Location: _____

Engineer's Name and Telephone Number: _____

General Description: _____

Contract Amount: _____

The Owner reserves the right to reject any and all bids which do not include a completed qualifications section and/or do not meet the necessary qualifications criteria, for both prime contractor and subcontractors, as described within this qualifications section, for construction work to be performed and completed as required by the Contract Documents.

BIDDER

BIDDER NAME: _____

PREPARED BY: _____

SIGNED BY: _____

TITLE: _____

NOTE: THIS FORM MUST BE COMPLETED BY BIDDER

COPYRIGHT © 2018 BY H2M. ALL RIGHTS RESERVED.
NO PART OF THIS DOCUMENT MAY BE REPRODUCED OR DISTRIBUTED IN ANY FORM OR BY ANY MEANS WITHOUT THE PRIOR WRITTEN CONSENT OF H2M ARCHITECTS + ENGINEERS, MELVILLE, NEW YORK, USA.

A: SCH | PM: NICHOLAS F. BONO | LSB: JAMES J. FUCHS |
LSD: 7/9/2018 3:14 PM | LPD: 7/9/2018 3:14 PM | 15 MAY 2009| R#: 28 | P: 3 |
X:\RDSD (RIVERHEAD SEWER DISTRICT) - 10805\RDSD1801 841 OLD COUNTRY RD DESIGN\02-SPECS\0-FRONTEND\09 QUALIFICATIONS OF BIDDERS - RDSD 1801.DOC | QUALIFICATIONS OF BIDDERS | RDSD 18-01 |

Instructions for New York State Vendor Responsibility Questionnaires

The New York State Vendor Responsibility Questionnaire Is intended to elicit information based on vendor type (For-Profit or Not-for-Profit) and activity (Construction or Non-Construction). The For-Profit Construction (CCA-2) questionnaire follows this page.

Business Entities may print the PDF version of a questionnaire form and complete it annually or may obtain the MS Word version from New York State and complete the questionnaire on a computer. Completing the questionnaire in MS Word allows the questionnaire to be saved on the user's computer and updated in the event that the vendor's information changes.

The person(s) completing the vendor responsibility questionnaire must be knowledgeable about the vendor's business and operations. The certification at the end of each questionnaire must be completed by an owner or officer of the Business Entity and must be notarized to be complete.

Business Entities must answer every question contained in the selected questionnaire. Most questions require "Yes" or "No" answers and request additional information where necessary. For paper submissions, responses that require additional information must include an attachment containing this information. A Business Entity must provide all relevant information which can be obtained within the limits of the law. The Business Entity is not required to provide information regarding a determination or finding made in error which was subsequently corrected.

If the submitting Business Entity is a Joint Venture, one questionnaire must be submitted for the Joint Venture plus each Business Entity comprising the Joint Venture must also submit separate questionnaires.

If the Business Entity uses a Social Security Number (SSN) as its identification number, providing the SSN on the questionnaire is optional. Individuals and Sole Proprietors may use an SSN but are encouraged to obtain and use an Employer Identification Number.

NEW YORK STATE VENDOR RESPONSIBILITY QUESTIONNAIRE
FOR-PROFIT CONSTRUCTION (CCA-2)

You have selected the For-Profit Construction questionnaire, commonly known as the "CCA-2," which may be printed and completed in this format or, **for your convenience**, **may be completed online using the New York State VendRep System.**

COMPLETION & CERTIFICATION

The person(s) completing the questionnaire must be knowledgeable about the vendor's business and operations. An owner or official must certify the questionnaire and the signature must be notarized.

NEW YORK STATE VENDOR IDENTIFICATION NUMBER (VENDOR ID)

The Vendor ID is a ten-digit identifier issued by New York State when the vendor is registered on the Statewide Vendor File. This number must now be included on the questionnaire. If the business entity has not obtained a Vendor ID, contact the IT Service Desk at ITServiceDesk@osc.state.ny.us or call 866-370-4672.

DEFINITIONS

All underlined terms are defined in the "New York State Vendor Responsibility Definitions List," found at http://www.osc.state.ny.us/vendrep/documents/questionnaire/definitions.pdf. These terms may not have their ordinary, common or traditional meanings. Each vendor is strongly encouraged to read the respective definitions for any and all underlined terms. By submitting this questionnaire, the vendor agrees to be bound by the terms as defined in the "New York State Vendor Responsibility Definitions List" existing at the time of certification.

RESPONSES

Every question must be answered. Each response must provide all relevant information which can be obtained within the limits of the law. However, information regarding a determination or finding made in error which was subsequently corrected or overturned, and/or was withdrawn by the issuing government entity, is not required. Individuals and Sole Proprietors may use a Social Security Number but are encouraged to obtain and use a federal Employer Identification Number (EIN).

NYS VENDOR ID: _____

NEW YORK STATE VENDOR RESPONSIBILITY QUESTIONNAIRE
FOR-PROFIT CONSTRUCTION (CCA-2)

BUSINESS ENTITY INFORMATION		
Legal Business Name	EIN _____	
Address of the Principal Place of Business (street, city, state, zip code)	New York State Vendor Identification Number	
	Telephone ext.	Fax
	Website	
Authorized Contact for this Questionnaire		
Name	Telephone ext.	Fax
Title	Email	

Additional Business Entity Identities: If applicable, list any other DBA, Trade Name, Former Name, Other Identity, or EIN used in the last five (5) years, the state or county where filed and the status (active or inactive).

Type	Name	EIN	State or County where filed	Status

I. BUSINESS CHARACTERISTICS		
1.0 Business Entity Type – Check appropriate box and provide additional information:		
a) ☐ Corporation (including PC)	Date of Incorporation	
b) ☐ Limited Liability Company (LLC or PLLC)	Date Organized	
c) ☐ Limited Liability Partnership	Date of Registration	
d) ☐ Limited Partnership	Date Established	
e) ☐ General Partnership	Date Established	County (if formed in NYS)
f) ☐ Sole Proprietor	How many years in business?	
g) ☐ Other	Date Established	
If Other, explain:		
1.1 Was the Business Entity formed in New York State?		☐ Yes ☐ No
If "No," indicate jurisdiction where the Business Entity was formed:		
☐ United States	State	
☐ Other	Country	

NYS VENDOR ID: _____

NEW YORK STATE VENDOR RESPONSIBILITY QUESTIONNAIRE
FOR-PROFIT CONSTRUCTION (CCA-2)

I. BUSINESS CHARACTERISTICS	
1.2 Is the Legal Business Entity publicly traded?	☐ Yes ☐ No
If "Yes," provide the CIK code or Ticker Symbol:	
1.3 Is the Business Entity currently registered to do business in New York State? *Note: Select "Not Required" if the Business Entity is a Sole Proprietor or General Partnership*	☐ Yes ☐ No ☐ Not Required
If "No," explain why the Business Entity is not required to be registered to do business in New York State:	
1.4 Is the responding Business Entity a Joint Venture? Note: If the submitting Business Entity is a Joint Venture, also submit a separate questionnaire for each Business Entity comprising the Joint Venture.	☐ Yes ☐ No
1.5 If the Business Entity's Principal Place of Business is not in New York State, does the Business Entity maintain an office in New York State? *(Select "N/A" if Principal Place of Business is in New York State.)*	☐ Yes ☐ No ☐ N/A
If "Yes," provide the address and telephone number for one office located in New York State.	
1.6 Is the Business Entity a New York State certified Minority-Owned Business Enterprise, or Women-Owned Business Enterprise, or New York State Small Business, or federally certified Disadvantaged Business Enterprise?	☐ Yes ☐ No
If "Yes," check all that apply: ☐ New York State certified Minority-Owned Business Enterprise (MBE) ☐ New York State certified Women-Owned Business Enterprise (WBE) ☐ New York State Small Business ☐ Federally certified Disadvantaged Business Enterprise (DBE)	
1.7 Identify each person or business entity that is, or has been within the past five (5) years, Principal Owner of 5.0% or more of the firm's shares; a Business Entity Official; or one of the five largest shareholders, if applicable. *(Attach additional pages if necessary.)* Joint Ventures: Provide information for all firms involved.	

Name *(For each person, include middle initial)*	Title	Percentage of ownership (Enter 0%, if not applicable)	Employment status with the firm
			☐ Current ☐ Former
			☐ Current ☐ Former
			☐ Current ☐ Former
			☐ Current ☐ Former

NYS VENDOR ID: _____

NEW YORK STATE VENDOR RESPONSIBILITY QUESTIONNAIRE
FOR-PROFIT CONSTRUCTION (CCA-2)

II. AFFILIATE and JOINT VENTURE RELATIONSHIPS

2.0 Are there any other construction-related firms in which, now or in the past five years, the submitting Business Entity or any of the individuals or business entities listed in question 1.7 either owned or owns 5.0% or more of the shares of, or was or is one of the five largest shareholders or a director, officer, partner or proprietor of said other firm? *(Attach additional pages if necessary.)*			☐ Yes ☐ No
Firm/Company Name	Firm/Company EIN (If available)	Firm/Company's Primary Business Activity	
Firm/Company Address			
Explain relationship with the firm and indicate percent of ownership, if applicable (enter N/A, if not applicable):			
Are there any shareholders, directors, officers, owners, partners or proprietors that the submitting Business Entity has in common with this firm?			☐ Yes ☐ No
Individual's Name *(Include middle initial)*	Position/Title with Firm/Company		
2.1 Does the Business Entity have any construction-related affiliates not identified in the response to question 2.0 above? *(Attach additional pages if necessary.)*			☐ Yes ☐ No
Affiliate Name	Affiliate EIN (If available)	Affiliate's Primary Business Activity	
Affiliate Address			
Explain relationship with the affiliate and indicate percent of ownership, if applicable *(enter N/A, if not applicable)*:			
Are there any shareholders, directors, officers, owners, partners or proprietors that the submitting Business Entity has in common with this affiliate?			☐ Yes ☐ No
Individual's Name *(Include middle initial)*	Position/Title with Firm/Company		
2.2 Has the Business Entity participated in any construction-related Joint Ventures within the past three (3) years? *(Attach additional pages if necessary.)*			☐ Yes ☐ No
Joint Venture Name	Joint Venture EIN (If available)	Identify parties to the Joint Venture	

NYS VENDOR ID: _____

NEW YORK STATE VENDOR RESPONSIBILITY QUESTIONNAIRE
FOR-PROFIT CONSTRUCTION (CCA-2)

III. CONTRACT HISTORY	
3.0 Has the Business Entity completed any construction contracts?	☐ Yes ☐ No
If "Yes," list the ten most recent construction contracts the Business Entity has completed using Attachment A – Completed Construction Contracts, found at www.osc.state.ny.us/vendrep/documents/questionnaire/ac3294s.doc. *If less than ten, include most recent subcontracts on projects up to that number.*	
3.1 Does the Business Entity currently have uncompleted construction contracts?	☐ Yes ☐ No
If "Yes," list all current uncompleted construction contracts by using Attachment B – Uncompleted Construction Contracts, found at www.osc.state.ny.us/vendrep/documents/questionnaire/ac3295s.doc. *Note: Ongoing projects must be included.*	

IV. INTEGRITY – CONTRACT BIDDING ***Within the past five (5) years, has the Business Entity, an affiliate, or any predecessor company or entity:***	
4.0 Been suspended or debarred from any government contracting process or been disqualified on any government procurement?	☐ Yes ☐ No
4.1 Been subject to a denial or revocation of a government prequalification?	☐ Yes ☐ No
4.2 Had any bid rejected by a government entity for lack of qualifications, responsibility or because of the submission of an informal, non-responsive or incomplete bid?	☐ Yes ☐ No
4.3 Had a proposed subcontract rejected by a government entity for lack of qualifications, responsibility or because of the submission of an informal, non-responsive or incomplete bid?	☐ Yes ☐ No
4.4 Had a low bid rejected on a government contract for failure to make good faith efforts on any Minority-Owned Business Enterprise, Women-Owned Business Enterprise or Disadvantaged Business Enterprise goal or statutory affirmative action requirements on a previously held contract?	☐ Yes ☐ No
4.5 Agreed to a voluntary exclusion from bidding/contracting with a government entity?	☐ Yes ☐ No
4.6 Initiated a request to withdraw a bid submitted to a government entity or made any claim of an error on a bid submitted to a government entity?	☐ Yes ☐ No
For each "Yes," provide an explanation of the issue(s), the Business Entity involved, the relationship to the submitting Business Entity, the government entity involved, project(s), relevant dates, any remedial or corrective action(s) taken and the current status of the issue(s). Provide answer(s) below or attach additional sheets with numbered responses.	

V. INTEGRITY – CONTRACT AWARD ***Within the past five (5) years, has the Business Entity, an affiliate, or any predecessor company or entity:***	
5.0 Defaulted on or been suspended, cancelled or terminated for cause on any contract?	☐ Yes ☐ No
5.1 Been subject to an administrative proceeding or civil action seeking specific performance or restitution (except any disputed work proceeding) in connection with any government contract?	☐ Yes ☐ No
5.2 Entered into a formal monitoring agreement, consent decree or stipulation settlement as specified by, or agreed to with, any government entity?	☐ Yes ☐ No
5.3 Had its surety called upon to complete any contract whether government or private sector?	☐ Yes ☐ No
5.4 Forfeited all or part of a standby letter of credit in connection with any government contract?	☐ Yes ☐ No

NYS VENDOR ID: _____

NEW YORK STATE VENDOR RESPONSIBILITY QUESTIONNAIRE
FOR-PROFIT CONSTRUCTION (CCA-2)

V. INTEGRITY – CONTRACT AWARD

Within the past five (5) years, has the Business Entity, an affiliate, or any predecessor company or entity:

For each "Yes," provide an explanation of the issue(s), the Business Entity involved, the relationship to the submitting Business Entity, the government entity/owners involved, project(s), contract number(s), relevant dates, any remedial or corrective action(s) taken and the current status of the issue(s). Provide answer(s) below or attach additional sheets with numbered responses.

VI. CERTIFICATIONS/LICENSES

Within the past five (5) years, has the Business Entity, an affiliate, or any predecessor company or entity:

6.0	Had a revocation or suspension of any business or professional permit and/or license?	☐ Yes ☐ No
6.1	Had a denial, decertification, revocation or forfeiture of New York State certification of Minority-Owned Business Enterprise, Women-Owned Business Enterprise or a federal certification of Disadvantaged Business Enterprise status, for other than a change of ownership?	☐ Yes ☐ No

For each "Yes," provide an explanation of the issue(s), the Business Entity involved, the relationship to the submitting Business Entity, the government entity involved, relevant dates, any remedial or corrective action(s) taken and the current status of the issue(s). Provide answer(s) below or attach additional sheets with numbered responses.

VII. LEGAL PROCEEDINGS/GOVERNMENT INVESTIGATIONS

Within the past five (5) years, has the Business Entity, an affiliate, or any predecessor company or entity:

7.0	Been the subject of a criminal investigation, whether open or closed, or an indictment for any business-related conduct constituting a crime under local, state or federal law?	☐ Yes ☐ No
7.1	Been the subject of:	
	(i.) An indictment, grant of immunity, judgment or conviction (including entering into a plea bargain) for conduct constituting a crime; or	☐ Yes ☐ No
	(ii.) Any criminal investigation, felony indictment or conviction concerning the formation of, or any business association with, an allegedly false or fraudulent Minority-Owned Business Enterprise, Women-Owned Business Enterprise, or a Disadvantaged Business Enterprise?	☐ Yes ☐ No
7.2	Received any OSHA citation, which resulted in a final determination classified as serious or willful?	☐ Yes ☐ No
7.3	Had a government entity find a willful prevailing wage or supplemental payment violation?	☐ Yes ☐ No
7.4	Had a New York State Labor Law violation deemed willful?	☐ Yes ☐ No
7.5	Entered into a consent order with the New York State Department of Environmental Conservation, or a federal, state or local government enforcement determination involving a violation of federal, state or local environmental laws?	☐ Yes ☐ No

NYS VENDOR ID: _____

NEW YORK STATE VENDOR RESPONSIBILITY QUESTIONNAIRE
FOR-PROFIT CONSTRUCTION (CCA-2)

VII. LEGAL PROCEEDINGS/GOVERNMENT INVESTIGATIONS

Within the past five (5) years, has the Business Entity, an affiliate, or any predecessor company or entity:

7.6 Other than previously disclosed, been the subject of any citations, notices or violation orders; a pending administrative hearing, proceeding or determination of a violation of: • Federal, state or local health laws, rules or regulations; • Federal, state or local environmental laws, rules or regulations; • Unemployment insurance or workers compensation coverage or claim requirements; • Any labor law or regulation, which was deemed willful; • Employee Retirement Income Security Act (ERISA); • Federal, state or local human rights laws; • Federal, state or local security laws?	☐ Yes ☐ No

For each "Yes," provide an explanation of the issue(s), the Business Entity involved, the relationship to the submitting Business Entity, the government entity involved, relevant dates, any remedial or corrective action(s) taken and the current status of the issue(s). Provide answer(s) below or attach additional sheets with numbered responses.

Note: Information regarding a determination or finding made in error, which was subsequently corrected or overturned, and/or was withdrawn by the issuing government entity, is not required.

VIII. LEADERSHIP INTEGRITY

If the Business Entity is a Joint Venture Entity, answer "N/A - Not Applicable" to questions in this section.

Within the past five (5) years has any individual previously identified or any individual currently or formerly having the authority to sign, execute or approve bids, proposals, contracts or supporting documentation on behalf of the Business Entity with any government entity been:

8.0 Sanctioned relative to any business or professional permit and/or license?	☐ Yes ☐ No ☐ N/A
8.1 Suspended, debarred or disqualified from any government contracting process?	☐ Yes ☐ No ☐ N/A
8.2 The subject of a criminal investigation, whether open or closed, or an indictment for any business-related conduct constituting a crime under local, state or federal law?	☐ Yes ☐ No ☐ N/A
8.3 Charged with a misdemeanor or felony, indicted, granted immunity, convicted of a crime or subject to a judgment for: (i.) Any business-related activity, including but not limited to fraud, coercion, extortion, bribe or bribe-receiving, giving or accepting unlawful gratuities, immigration or tax fraud, racketeering, mail fraud, wire fraud, price-fixing or collusive bidding; or (ii.) Any crime, whether or not business-related, the underlying conduct of which related to truthfulness, including but not limited to the filing of false documents or false sworn statements, perjury or larceny	☐ Yes ☐ No ☐ N/A

For each "Yes," provide an explanation of the issue(s), the individual involved, the relationship to the submitting Business Entity, the government entity involved, relevant dates, any remedial or corrective action(s) taken and the current status of the issue(s). Provide answer(s) below or attach additional sheets with numbered responses.

NYS VENDOR ID: _____

NEW YORK STATE VENDOR RESPONSIBILITY QUESTIONNAIRE
FOR-PROFIT CONSTRUCTION (CCA-2)

IX. FINANCIAL AND ORGANIZATIONAL CAPACITY	
9.0 Within the past five (5) years, has the Business Entity or any affiliate received any formal unsatisfactory performance assessment(s) from any government entity on any contract?	☐ Yes ☐ No
If "Yes," provide an explanation of the issue(s), the Business Entity involved, the relationship to the submitting Business Entity, the government entity involved, relevant dates, any remedial or corrective action(s) taken and the current status of the issue(s). Provide answer below or attach additional sheets with numbered responses.	
9.1 Within the past five (5) years, has the Business Entity or any affiliate had any liquidated damages assessed over $25,000?	☐ Yes ☐ No
If "Yes," provide an explanation of the issue(s), the Business Entity involved, the relationship to the submitting Business Entity, relevant dates, the contracting party involved, the amount assessed and the current status of the issue(s). Provide answer below or attach additional sheets with numbered responses.	
9.2 Within the past five (5) years, has the Business Entity or any affiliate had any liens, claims or judgments over $25,000 filed against the Business Entity which remain undischarged or were unsatisfied for more than 90 days? (*Note: Including but not limed to tax warrants or liens. Do not include UCC filings.)*	☐ Yes ☐ No
If "Yes," provide an explanation of the issue(s), the Business Entity involved, the relationship to the submitting Business Entity, relevant dates, the Lien holder or Claimants' name(s), the amount of the lien(s) and the current status of the issue(s). Provide answer below or attach additional sheets with numbered responses.	
9.3 In the last seven (7) years, has the Business Entity or any affiliate initiated or been the subject of any bankruptcy proceedings, whether or not closed, or is any bankruptcy proceeding pending?	☐ Yes ☐ No
If "Yes," provide the Business Entity involved, the relationship to the submitting Business Entity, the bankruptcy chapter number, the court name and the docket number. Indicate the current status of the proceedings as "Initiated," "Pending" or "Closed." Provide answer below or attach additional sheets with numbered responses.	

9.4 What is the Business Entity's Bonding Capacity?	
a. Single Project	b. Aggregate (All Projects)
9.5 List Business Entity's Gross Sales for the previous three (3) Fiscal Years:	

1st Year (Indicate year) Gross Sales	2nd Year (Indicate year) Gross Sales	3rd Year (Indicate year) Gross Sales
9.6 List Business Entity's Average Backlog for the previous three (3) fiscal years: (Estimated total value of uncompleted work on outstanding contracts)		
1st Year (Indicate year) Amount	2nd Year (Indicate year) Amount	3rd Year (Indicate year) Amount
9.7 Attach Business Entity's most recent annual financial statement and accompanying notes or complete Attachment C – Financial Information, found at www.osc.state.ny.us/vendrep/documents/questionnaire/ac3296s.xls. *(This information must be attached.)*		

NYS VENDOR ID: _____

NEW YORK STATE VENDOR RESPONSIBILITY QUESTIONNAIRE
FOR-PROFIT CONSTRUCTION (CCA-2)

X. FREEDOM OF INFORMATION LAW (FOIL)	
10.0 Indicate whether any information provided herein is believed to be exempt from disclosure under the Freedom of Information Law (FOIL). *Note: A determination of whether such information is exempt from FOIL will be made at the time of any request for disclosure under FOIL. Attach additional pages if necessary.*	☐ Yes ☐ No
If "Yes," indicate the question number(s) and explain the basis for the claim.	

NYS VENDOR ID: _____

NEW YORK STATE VENDOR RESPONSIBILITY QUESTIONNAIRE FOR-PROFIT CONSTRUCTION (CCA-2)

Certification

The undersigned: (1) recognizes that this questionnaire is submitted for the express purpose of assisting New York State government entities (including the Office of the State Comptroller (OSC)) in making responsibility determinations regarding award or approval of a contract or subcontract and that such government entities will rely on information disclosed in the questionnaire in making responsibility determinations; (2) acknowledges that the New York State government entities and OSC may, in their discretion, by means which they may choose, verify the truth and accuracy of all statements made herein; and (3) acknowledges that intentional submission of false or misleading information may result in criminal penalties under State and/or Federal Law, as well as a finding of non-responsibility, contract suspension or contract termination.

The undersigned certifies that he/she:

- is knowledgeable about the submitting Business Entity's business and operations;
- has read and understands all of the questions contained in the questionnaire;
- has not altered the content of the questionnaire in any manner;
- has reviewed and/or supplied full and complete responses to each question;
- to the best of his/her knowledge, information and belief, confirms that the Business Entity's responses are true, accurate and complete, including all attachments, if applicable;
- understands that New York State government entities will rely on the information disclosed in the questionnaire when entering into a contract with the Business Entity; and
- is under an obligation to update the information provided herein to include any material changes to the Business Entity's responses at the time of bid/proposal submission through the contract award notification, and may be required to update the information at the request of the New York State government entities or OSC prior to the award and/or approval of a contract, or during the term of the contract.

Signature of Owner/Official _____

Printed Name of Signatory _____

Title _____

Name of Business _____

Address _____

City, State, Zip _____

Sworn to before me this _____ day of _____, 20___;

_____ Notary Public

RIVERHEAD SEWER DISTRICT

TOWN OF RIVERHEAD **NEW YORK**

The Bidder shall list the subcontractors, if any, to be used for this project. Provide the required information for each proposed subcontractor. Make appropriate copies of this form should the Bidder propose more than five (5) subcontractors. List at least five projects for each subcontractor that demonstrates the subcontractor's qualifications to perform the work of the project. The projects shall be similar in size and complexity and have been completed within the last five (5) years by the subcontractor.

Subcontractor Name: _____

Type of Work: _____

Owner	Contact Name	Phone Number	Location	Contract Amount

Subcontractor Name: _____

Type of Work: _____

Owner	Contact Name	Phone Number	Location	Contract Amount

Subcontractor Name: _____

Type of Work: _____

Owner	Contact Name	Phone Number	Location	Contract Amount

Subcontractor Name: _____

Type of Work: _____

Owner	Contact Name	Phone Number	Location	Contract Amount

Subcontractor Name: _____

Type of Work: _____

Owner	Contact Name	Phone Number	Location	Contract Amount

NOTE: THIS FORM MUST BE COMPLETED BY BIDDER

COPYRIGHT © 2018 BY H2M. ALL RIGHTS RESERVED.
NO PART OF THIS DOCUMENT MAY BE REPRODUCED OR DISTRIBUTED IN ANY FORM OR BY ANY MEANS WITHOUT THE PRIOR WRITTEN CONSENT OF H2M ARCHITECTS + ENGINEERS, MELVILLE, NEW YORK, USA.

A: SHEARL@H2M.COM | PM: NICHOLAS F. BONO | LSB: JAMES J. FUCHS |
LSD: 7/9/2018 3:15 PM | LPD: 7/9/2018 3:15 PM | 12 JULY 2012| R#: 34 | P: 3 |
X:\RDSD (RIVERHEAD SEWER DISTRICT) - 10805\RDSD1801 841 OLD COUNTRY RD DESIGN\02-SPECS\0-FRONTEND\02 INDEX.DOC | INDEX | RDSD 18-01 |

INDEX

1. **Contract Documents and Definitions.**
2. **Scope of Work.**
3. **Compensation to be Paid to the Contractor.**
4. **Time of Essence.**
5. **Time of Completion**
6. **Liquidated Damages.**
7. **Termination of Primary Contractor.**
8. **Extension of Time. No Waiver.**
9. **Weather.**
10. **Contract Security.**
11. **Laws and Ordinances.**
12. **Qualifications for Employment.**
13. **Non-Discrimination.**
14. **Payments of Employees.**
15. **Estimates and Payments.**
16. **Acceptance of Final Payment.**
17. **Construction Reports.**
18. **Inspection and Tests.**
19. **Plans and Specifications: Interpretations.**
20. **Superintendency by Contractor.**
21. **Contractor's Title to Materials.**
22. **Protection of Work, Persons and Property.**
23. **Representation of Contractor.**
24. **Authority of Engineer.**
25. **Changes and Alterations.**
26. **Correction of Work.**
27. **Weather Conditions.**
28. **The Town's Right to Withhold Payment.**
29. **The Town's Right to Terminate Contract.**
30. **Contractor's Right to Stop Work or Terminate Contract.**
31. **Responsibility for Work.**
32. **Use of Premises and Removal of Debris.**
33. **Suits of Law.**
34. **Power of the Contractor to Act in an Emergency.**

35. Provisions Required by Law Deemed Inserted.

36. Subletting, Successor and Assigns.

37. General Municipal Law Clause.

38. Contractor's Insurance.

38A. Hold Harmless Clause.

39. Claims Against Town Officials and Town Employees.

40. Proof of Carriage of Insurance.

41. Term of Contract.

1. CONTRACT DOCUMENTS AND DEFINITIONS

The Notice to Bidders, Instructions to Bidders, Proposal Form, Form of Bond, Conditions of Contract, General Conditions, Specifications, Form of Contract, Construction Drawings, together with any Addenda, shall form part of this Contract, and the provisions thereof shall be as binding upon the parties hereto, as if they were herein fully set forth. The table of contents, titles, heading, headlines, and marginal notes contained herein are solely to facilitate reference to various provisions of the Contract Documents and in no way affect, limit or cast light upon the interpretation of the provisions to which they refer. Whenever the term "Contract Documents" is used, it shall mean and include the Notice to Bidders, Instructions to Bidders, Proposal Form, Form of Bond, Conditions of Contract, General Conditions, Plans & Specifications, Form of Contract and any Addenda. In case of any conflict or inconsistency between the provisions of the contract and those of the Specifications, the provisions of this contract shall govern.

Extra Work: The term "extra work" as used herein, refers to and includes all work required by the Town, which in the judgment of the Town Engineer involves changes in or additions to work required by the Specifications and any Addenda in their present form and which is not covered by the price in the Form of Bid.

Subcontractor: The term "subcontractor" shall mean any person, firm, or corporation supplying labor and material for work at the site of the project but not including the parties to this contract.

Notice: The term "notice" as used herein, shall mean and include written notice. Written notice shall be deemed to have been duly served when delivered to, or at last known business address of, the person, firm or corporation for who intended, or his, their, or its duly authorized agents, representatives, or officer, or when enclosed in a postage prepaid wrapper or envelope addressed to such person, firm or corporation at his, their or its last known business address and deposited in a United States mailbox.

Directed, Required, Approved, Acceptable: Whenever the Contract Documents refer to the work or its performance, "directed", "required", "permitted", imply the direction, requirement, permission, order, designation or prescription of the Town Engineer, or his representative, and "approved", "satisfied", or "satisfactory", "in the judgment of", and words of like import, shall mean approved, or acceptable to, or satisfactory to, or in the judgment of the Town Engineer, or his representative.

2. SCOPE OF SERVICES

The contractor will furnish all labor, materials, suppliers, equipment and other facilities necessary or proper for, or incidental to, the work contemplated by this contract as required by, and in strict accordance with the applicable Plans and Specifications and Addenda prepared by the Town Engineer and/or required by, and in strict accordance with, such changes as are ordered and approved pursuant to this contract, and will perform all other obligations imposed on him by this contract. It is specifically understood that this contract does not guarantee any minimum or maximum quantities of work. Quantities will be as ordered by the Town from time to time, and unit bid prices will govern. The quantities in the proposal are for bidding purposes only.

3. COMPENSATION TO BE PAID TO THE CONTRACTOR

(A) Agreed Prices: It is understood and agreed that the contractor will accept as payment in full the summation of the products of the actual quantities in place upon the completion of the work, as determined by the Town Engineer's measurements, by the unit prices bid, no allowances being made

for anticipated profit or for reasons of variations from the estimated quantities set forth in the Form of Bid.

(B) Extra Work: The town may, at any time, by a written order and without notice to the sureties, require the performance of such extra work or changes in the work as it may find necessary or desirable. The amount of compensation to be paid to the contract for any extra work, as so ordered, shall be determined as follows:

1. By such applicable unit prices, if any, as set forth in the contract; or
2. If no such unit prices are set forth, then by unit price or by a lump sum mutually agreed upon by the town and the contractor; and
3. If no such unit prices are set forth and if the parties cannot agree upon unit prices or a lump sum; then by actual net cost in money to the contractor of the materials, permits, wages of applied labor, premiums for Worker's Compensation Insurance, payroll taxes required by law, rental for plant and equipment used (excluding small tools) to which total cost will be added twenty (20) percent as full compensation for all other items of profit costs and expenses, including administration, overhead, superintendency, insurance, insurance other than Workers' Compensation Insurance, materials used in temporary structures, allowances made by the contractor to subcontractors, additional premiums upon the performance bond of the contractor and the use of small tools.

4. TIME OF ESSENCE

Inasmuch as the provisions of the contract relating to the time of performance and completion of the work are for the purpose of enabling the town to proceed with the construction of a public improvement in accordance with a predetermined program, such provisions are of the essence of this contract.

5. TIME OF COMPLETION

The town shall assign a construction schedule indicating a start date and a completion date. The contractor shall have a minimum of fourteen (14) days from the date of receipt of construction schedule to the earliest start date on the assigned construction schedule. If said schedule is not acceptable to the contractor, the contractor shall notify the town in writing, postmarked within three (3) working days from date of receipt of construction schedule. This notification shall include an alternative construction schedule. The alternative construction schedule completion date shall not exceed twenty-eight (28) calendar days from the original completion date assigned by the town. Failure to comply with time of completion shall constitute liquidated damages and termination of primary contractor.

6. LIQUIDATED DAMAGES

The time limit being essential to and of the essence of this contract, the primary contractor hereby agrees that the Town shall be and is hereby authorized to deduct and retain out of the money which may be due or may become due to said contractor under this agreement, the sum of the cost of completing the work by the secondary contractor, including overhead charges, services, inspector's wages, and interest on the money invested that the Town will suffer by reason of such default. The Town shall have the right to extend the time for the completion of said work.

7. TERMINATION OF PRIMARY CONTRACTOR

Termination of primary contractor shall include all work in progress and pending. All existing and pending purchase orders pertaining to work issued through the Town-wide Construction Contract shall be hereby considered void. All items previously awarded to terminated contractor shall be hereby awarded to corresponding secondary contractors. Termination of primary contractor shall extend the duration of the contract. At the discretion of the Town of Riverhead, termination of contractor shall warrant disqualification from awarding specific items or all items in succeeding Town-wide construction contracts Capital Improvement Projects, etc.

8. EXTENSIONS OF TIME. NO WAIVER.

If the contractor shall be delayed in the completion of his work by reason or by reasons of unforeseeable causes beyond his control and without his fault or negligence, including but not restricted to; acts of God, the public enemy, fires, floods, epidemics, quarantine restrictions, strikes, riots, civil commotion or freight embargoes, the period herein specified for completion of his work shall be extended by such time as shall be fixed by the Town.

No such extension of time shall be considered a waiver by the Town of its right to terminate the contract for abandonment or delay by the contractor as hereinafter provided, or relive the contractor from full responsibility for performance of his obligations hereunder.

9. WEATHER

During unsuitable weather, all work must stop when such work would be subject to injury and the contractor shall transfer his men and materials to those parts of the work where weather conditions will not have any effect on the workmanship to any damages on account of such damages or suspension, and he must protect any work that might be injured by the elements and make good any work that is injured.

10. CONTRACT SECURITY

The contractor shall furnish, at the request of the Town, a Performance Bond equal to 100% of the estimated value of individual projects completed under this contract at the discretion of the Town Engineer. Each individual project to be completed under the contract will be evaluated by the Town Engineer or his representative to determine the need for bonding. If bonding is deemed necessary, the contractor will be required to submit documentation confirming the actual cost of such bonding to the Town Engineer for approval. Upon approval, the Town will reimburse the contractor for 100% of the cost of any required bonding. The contractor is advised not to include the cost of bonding in bid submittals.

Additional or Substitute Bond: If at any time the Town shall be or become dissatisfied with any surety or sureties then upon the Performance Bond, or if for any other reason such bond shall cease to be adequate security to the Town, the contractor shall within five (5) days after notice from the Town to do so, substitute an acceptable bond in such form and sum and signed by such other surety as may be satisfactory to the Town. The premiums on such bonds shall be made until the new surety shall have been qualified.

11. LAWS AND ORDINANCES

In the execution of the contract, the contractor will be required to observe and obey all federal, state, county and local laws, ordinances, codes and regulations relating to the performance of the contract including but not limiting labor employed thereon, materials supplied, obstructing streets and highways, maintaining signals, storing, handling and use of explosives and all other general ordinances and state statutes affecting him or his employees of his work hereunder in his relations with the municipality or any other persons, and also all laws, codes, ordinances controlling or limiting the contractor while engaged in executing the work under the contract.

As a condition of the contract, the contractor shall and does hereby agree to comply with all requirements of the Labor Laws of the State of New York.

The contractor shall comply with the provisions of Sections 291-299 of the Executive Law and Civil Rights Law, shall furnish all information and reports deemed necessary by the State Commission for Human Rights, the Attorney General and the Industrial Commissioner for purposes of investigation to ascertain compliance with such sections of the Executive Law and Civil Rights Law.
The contract may be forthwith canceled, terminated or suspended, in whole or in part, by the contracting agency upon the basis of a finding made by the State Commissioner for Human Rights that the contractor has not complied with these laws.

The contract hereby expressly agrees to comply with all the provisions of the Labor Law and any and all amendments thereto, insofar as the same are applicable to the contract. The Labor Law, as amended, provides that no laborer, worker or mechanic in the employ of the contractor, subcontractor or other person doing or contracting to do the whole or a part of the work contemplated by this contract, shall be permitted or required to work more than eight (8) hours in any one (1) calendar day, except in cases of extraordinary emergency caused by fire, flood or danger to life or property; that no such person shall be employed more than eight (8) hours in any day or more than five (5) days in any week except in such emergency; that the wages to be paid for a legal day's work as herein before defined, to laborers, workmen or mechanics upon the work called for under this contract or upon any materials used upon, or in connection therewith, shall not be less than the prevailing rate for a day's work in the same trade or occupation in the locality within the State where such work is to be done and each laborer, worker or mechanic employed by the contractor, subcontractor or other person about or upon the work shall be paid the wages herein provided; that employees engaged in the construction maintenance, and repair of highways and in water works construction outside the limits of cities and villages are no longer exempt from the provisions of the labor Law which require that payment of the prevailing rate of wages and the eight (8) hour day.

Section 222 of the Labor Law, as amended by Chapters 556 and 557 of the Laws of 1933, provides that preference in employment shall be given to citizens of the State of New York who have been residents of Suffolk County for at least six (6) consecutive months immediately prior to the commencement of their employment. Each person so employed shall furnish satisfactory proof of residence in accordance with rules adopted by the Industrial Commissioner. Person other than citizens of the State of New York shall be employed only when such citizens are not available. Section 222 further provides that upon the demand of the State Industrial Commissioners, the contractor shall furnish a list of names and addresses of all his subcontractors and further provides that a violation of this section shall constitute a misdemeanor and shall be punishable by a fine of not less than Fifty Dollars ($50.00) nor more than Five Hundred Dollars ($500.00) or by imprisonment for not less than thirty nor more than ninety days, or both fine and imprisonment.

Section 220-A of the Labor Law, as amended by Chapter 472 of the Laws of 1932, provides that before payment is made by or on behalf of the State or any city, county, town or village or other civil division of

the state of any sums due on account of a contract for a public improvement, it is the duty of the comptroller or the financial officer of the municipal corporation to require the contractor and each and every subcontractor to file a certified statement in writing, in satisfactory form, certifying to the amount then due and owing to any and all laborers for daily or weekly wages on account of labor performed upon the work of the contractor, setting forth herein the names of the persons whose wages are unpaid and the amount due each respectively.

Section 220-B of the Labor Law, as so amended, provides that any interested person who shall have previously filed a protest in writing objecting to the amounts due or to become due to him for daily or weekly wages for labor performed on the public improvement for which the contract was entered into, or if for any reason, it may be deemed advisable, the comptroller of the state or financial officer of the municipal corporation may deduct from the whole amount of any payment on account thereof of the sums or sum admitted by any contractor or subcontractor in such statement or statements so filed to be due and owing by him on account of labor performed and may withhold the amount so deducted for the benefit of the laborers for daily work, weekly wages, whose wages are unpaid as shown by the verified statements filed by any contractor or subcontractor and may pay directly to any person the amount or amounts so shown to be due for such wages.

Section 220-C of the Labor Law, as so amended, provides the penalty for making of a false oath or verification.

Section 220-D of the Labor Law provides that the advertised specifications for every contract for the construction, reconstruction, maintenance and/or repair of highways to which the state, county, town and/or village is a party shall contain a provision stating the minimum rate of hourly wage that can be paid, as shall be designated by the Industrial Commissioner, to the laborers employed in the performance of the contract whether by the contractor, subcontractor or other person doing or contracting to do the whole or part of the work completed by the laborers shall be paid not less than such hourly minimum rate of wage. Any person or corporation that willfully pays, after entering into such contract, less than such stipulated minimum hourly wage scale shall be guilty of a misdemeanor and upon conviction, shall be punished for a first offense by a fine of Five Hundred Dollars ($500.00) or by imprisonment; for a second offense by a fine of One Thousand Dollars ($1,000.00) and in addition thereto, the contract on which the violation has occurred shall be forfeited, and no such person or corporation shall be entitled to receive any sum nor shall any officer, agent or employee of the state pay the same or authorize its payment from the funds under his charge or control to any person or corporation for work done upon any contract, on which the contractor has been convicted or a second offense in violation of the provisions of this section.

The minimum wage rates established by the Industrial Commissioner, State of New York, for this contract are set forth herein above as part of “Instructions to Bidders, Section 21 “NYS Wage Rates”

12. QUALIFICATIONS FOR EMPLOYMENT

No person under the age of sixteen (16) years and no person currently serving sentence in a penal or correctional institution shall be employed to perform any work on the project under this contract. No person whose age or physical condition is such as to make his employment dangerous to his health or safety or to the health or safety of others, shall be employed to perform any work on this project; provided, however, that such restrictions shall not operate against the employment of physically handicapped persons, otherwise employable, where each person may be safely assigned to work which they can ably perform.

13. NONDISCRIMINATION

There shall be no discrimination because of race, creed, or color in the employment of persons for work under this contract, whether performed by the contractor or any subcontractor. Neither shall the contractor or subcontractor or any person acting on behalf of the contractor or subcontractor discriminate in any manner against or intimidate any employee hired for the performance of work under this contract on account of race, creed, or color.

14. PAYMENTS OF EMPLOYEES

The contractor and each of his subcontractors shall pay each of his employees engaged in work on the project under this contract in full (less deductions made mandatory by law) not less often than once each week. Certified payrolls shall be submitted to the Town Engineer before payment to the contractor is processed. Affidavit attesting to payment or amount owed to employees shall be submitted before payment to contractor is processed.

15. ESTIMATES AND PAYMENTS

Upon successful completion of all work, the contractor shall submit an invoice to the Town Engineer for approval. Upon approval by the Town Engineer, payment will be made to the contractor within thirty (30) calendar days provided the payment request is correct and complete.

(A) Monthly: At the end of each calendar month during the progress of the work, the Town Engineer shall make an approximate estimate of the work satisfactorily completed, based upon the prices set forth in the Form of Bid. In consideration of the work completed, the Town will pay or cause to be paid to the contractor the amount estimated by the Town Engineer as due him less five (5%) percent.

The making of any such estimate or payment made thereon shall not be taken or construed as an acceptance by the Town of any work so estimated and paid for. The five (5%) percent of the amount of the monthly estimate remaining unpaid will be retained by the Town as a guarantee that the contractor will faithfully and completely fulfill all obligations imposed by the contract and specifications, and against any damages caused the Town by reason of any failure on the part of the contractor to fulfill all conditions and obligations herein contained.

(B) Final Estimate: One month after the completion and acceptance of the work specified and contracted for, the Town Engineer will make a final estimate of all the work done. Thereafter, the Town will pay the full amount, less prior payments, less any amounts retained to complete the work according to the provisions of the specifications, less any money paid by the Town by reasons of said contractor having failed to carry out faithfully and completely all the obligations and requirements herein contained. Upon final settlement, according to the conditions herein specified and not until such settlement shall have been made, will the contractor be relieved from the obligations assumed in the contract.

(C) Measurement for Payment: The Town Engineer shall make due measurement of work completed during the progress of the work and his estimate shall be final and conclusive evidence of the amounts of work performed by the contractor under and by virtue of this agreement and shall be taken as full measure of compensation to be received by the contractor.

(D) No payments will be made for materials delivered to the site which have not been incorporated into the work.

16. ACCEPTANCE OF FINAL PAYMENT CONSTITUTES RELEASE

The acceptance by the contractor of final payment shall be, and shall operate as a release to the Town from all claims and all liabilities to the contractor for all the things done or furnished in connection with this work and for every act and neglect of the Town and others relating to or arising out of, this work, excepting to the contractor's claims for interest upon the final payment, if this payment be improperly delayed. No payment, however, final or otherwise, shall operate to release the contractor or his sureties from any obligations under this contract or the performance bond or maintenance bond.

17. CONSTRUCTION REPORTS

The contractor shall submit to the Town Engineer prior to commencing any work under this contract, a detailed schedule and plan of operations indicating the manner in which the contractor proposes to prosecute the work and a time schedule therefor. Such schedules are not intended to bind the contractor to a predetermined plan or procedure, but rather to enable the Town Engineer to coordinate the work of the contractor with work required of and to be performed by others. The detailed schedule shall include a list of the subcontractors and material suppliers he proposes to use on the work.

18. INSPECTION AND TESTS

All material and workmanship shall be subject to inspection, examination and test by the Town Engineer, or his representative, at any time during the construction and at any and all places where manufacturing of materials used and/or construction is carried on.

If at any time before final acceptance of the entire work, the Town Engineer, or his representative, considers necessary or advisable an examination of any portion of the work already completed, by removing the same, the contractor shall upon request, furnish promptly all necessary facilities, labor and materials for such examination. If such work is found to be defective in any material respect, due to the fault of the contractor or any subcontractor, contractor shall be liable for the expense for such examination and of satisfactory reconstruction.

If, however, such approval and consent shall have been given and such work is found to meet the requirements of this contract, the contractor shall be recompensed for the expense of such examination and reconstruction in the manner herein provided for the payment of cost of extra work.

The selection of laboratories and/or agencies for the inspection and tests of supplies, materials or equipment shall be subject to the approval of or designated by the Town. Satisfactory documentary evidence that the material has passed the required inspection and tests must be furnished to the Town Engineer prior to the incorporation of the material in the work.

Any rejected work will be removed from the site of the project completely at the expense of the contractor.

19. PLANS AND SPECIFICATIONS: INTERPRETATIONS

The contractor shall keep at the site of the work one copy of the plans and specifications. Bidding of this contract shall be based on the information and data contained herein. Materials of construction and component installation shall conform to the general requirements of the specifications and details contained at the end of the specifications. The Town Engineer will provide plans and directions for

specific drainage projects as projects arise. System configurations, arrangements, elevations, materials and methods are to be as directed by the Town Engineer on a specific project basis.

20. SUPERINTENDENCY BY CONTRACTOR

At the site of the work, the contractor shall give his constant, personal attention to the work or employee a construction superintendent or foreman who shall have full authority to act for the contractor. It is understood that such representative shall be acceptable to the town Engineer, or his representative, and shall be one who can be contained in that capacity for the particular job involved unless he ceases to be on the contractor's payroll. The contractor's superintendent and foreman must be able to read and speak the English language.

21. CONTRACTOR'S TITLE TO MATERIALS

No materials or supplies for the work shall be purchased by the contractor or any subcontractor subject to a chattel mortgage or under a conditional sale or other agreement by which an interest is retained by the seller. The contractor warrants that he has good title to all materials and supplies used by him in the work.

22. PROTECTION OF WORK, PERSONS AND PROPERTY

Precaution shall be exercised at all times for the proper protection of all persons, property and work the contractor shall give notice to the owners of utilities which may serve the area and request their assistance in predetermining the location and depth of various pipes, conduits, manholes, and other underground facilities. The safety provisions of applicable laws and building and construction codes shall be observed. Machinery, equipment and all hazards shall be guarded or eliminated in accordance with the safety provisions of the manual of Accident Prevention in Construction published by the Associated General Contractors of America, to the extent that such provisions are not in contravention of applicable law. The contractor shall furnish entirely at his own expense any and all additional safety measures deemed necessary by the Town to adequately safeguard the traveling public.

23. REPRESENTATIONS OF CONTRACTOR

The contractor represents and warrants:

(A) That he is financially solvent and that he is experienced in, and competent to, perform the type of work involved under this contract and able to furnish the plant, materials, supplies and/or equipment to be furnished for the work; and

(B) That he is familiar with all federal, state and municipal law, ordinances and regulations which may in any way affect the work of those employed thereunder, including but not limited to any special acts relating to the work; and

(C) That such work required by these contract documents as is to be done by him can be satisfactorily constructed and used for the purpose for which is intended and that such construction will not injure any person or damage any property; and

(D) That he has carefully examined the specifications and project site and that from his own investigations he has satisfied himself as to the nature of the work, the character of equipment

and other facilities needed for the performance of the work, and the general local conditions which may in any way affect the work or its performance.

24. AUTHORITY OF THE ENGINEER

In the performance of the work, the contractor shall abide by all orders and directions and requirements of the Town Engineer, or his representative, and shall perform work to the satisfaction of the Town Engineer, or his representative, at such time and places, by such methods, and in such manner and sequence as he may require. The Town Engineer, or his representative, shall determine the amount, quality, acceptability, and fitness of all parts of the work, shall interpret the plans, specifications, contract documents and any extra work orders and shall decide all other questions in connection with the work. Upon request, the Town Engineer, or his representative, shall confirm in writing any oral orders, directions, requirements or determinations. The enumeration herein or elsewhere in the contract documents of particular instance in which the opinion, judgment, discretion or determination of the Town Engineer, or his representative, shall control or in which work shall be performed to his satisfaction or subject to his approval or inspection, shall not imply that only matters similar to those enumerated shall be so governed and performed, but without exception all the work shall be governed and so performed.

25. CHANGES AND ALTERATIONS

The Town Engineer reserves the right to make alterations in locations, line, grade, plan, form or dimensions of the work, or any part thereof, either before or after the commencement of construction. If such alteration diminishes the amount of work to be done, no claim for damages or anticipated profits will be warranted on the work which may be dispensed with. If such alterations increase the amount of work, such increases shall be paid for according to the quantity of work actually done and at the prices for such work as contained in the schedule of prices.

26. CORRECTION OF WORK

All work and all materials whether incorporated into the work or not, all processes of manufacture and all methods of construction shall be at all times and places subject to the inspection of the Town Engineer, or his representative, who shall be the final judge of quality, materials, processes of manufacture and methods of construction suitable for the purpose for which they are used. Should they fail to meet his approval, they shall be forthwith reconstructed, made good and replaced and/or corrected as the case may be, by the contractor, at his own expense.

If, in the opinion of the Town Engineer, or his representative, it is not desirable to replace any defective or damaged materials or to reconstruct or correct any portion of the work injured or not performed in accordance with the contract documents, the compensation to be paid to the contractor thereunder shall be reduced by such amount as in the judgment of the Town Engineer, or his representative, shall be equitable. The contractor expressly warrants that his work shall be free from any defects in materials or workmanship and agrees to correct any defects which may appear within one year following the final completion of the work. Neither the acceptance of the completed work nor payment therefor shall operate to release the contractor or his sureties from any obligations under or upon this contract or the performance bond.

27. WEATHER CONDITIONS

In the event of temporary suspension of work or during inclement weather or whenever the Town Engineer, or his representative, shall direct, the contractor will, and will cause his subcontractor to sufficiently protect his and their work and materials against damage or injury from the weather. If, in the opinion of the Town Engineer, or his representative, any work or material shall have been damaged or injured by reason of failure on the part of the contractor or any of his subcontractors to protect his or their work, such work and materials shall be removed and replaced at the expense of the contractor.

28. THE TOWN'S RIGHT TO WITHHOLD PAYMENTS

The Town may withhold from the contractor so much of any approved payments due him as may, in the judgment of the Town be necessary:

(A) To assure the payment of just claims then due and unpaid of any persons supplying labor or materials for the work;

(B) To protect the Town from loss due to defective work not remedied; or

(C) To protect the Town from loss due to injury to persons or damage to the work or property of other contractors or subcontractors or others, caused by the act or neglect of the contractor or any of his subcontractors. The Town shall have the right, as agent for the contractor, to apply such amounts so withheld in such manner as the town may deem proper to satisfy such claims or to secure such protection. Such applications of such money shall be deemed payments for the account of the contractor.

29. THE TOWN'S RIGHT TO TERMINATE CONTRACT

The Town of Riverhead may terminate this contract if:

(A) the contractor shall be adjudged bankrupt or make an assignment for the benefit of creditors; or

(B) a receiver or liquidator shall be appointed for the contractor for any of his property and shall not be dismissed within 20 days after such appointment, or the proceedings in connection therewith shall not be stayed on appeal within the said 20 days; or

(C) the contractor shall refuse or fail, after notice or warning from the Town Engineer, or his representative, to supply enough properly skilled workmen or proper materials to the job; or

(D) the contractor shall refuse or fail to prosecute the work or any part thereof with such diligence as will insure its completion within the period herein specified (or any duly authorized extension thereof) or shall fail to complete the work within said period; or

(E) the contractor shall fail to make prompt payments to persons supplying labor or materials for the work; or

(F) the contractor shall fail or refuse to regard laws, ordinances or the instruction of the Town Engineer, or his representative or otherwise be guilty of a substantial violation of any provisions of this contract.

Upon the determination by the Town of Riverhead to terminate this contract, and in any such event, the Town, without prejudice to any other rights or remedy it may have, may give seven (7) days notice to the contractor, terminate the employment of the contractor and his rights to proceed with as to the entire work or (or at the option of the Town) as to any portion thereof as to which delay shall have occurred, and may take possessions of the work and complete the work by contract, secondary contractor or otherwise, as the Town may deem appropriate. In such case, the contractor will not be entitled to receive any further payment until the work is finished. If the unpaid balance of the compensation to be paid to the contractor thereunder shall exceed the expense of so completing the work (including compensation for additional managerial, administrative and inspection services and any damages for delay), such excess shall be paid to the contractor. If such expense shall exceed such unpaid balance, the contractor and his sureties shall be liable to the Town for such excess. If the right of the contractor to proceed with the work is so terminated, the Town may take possession of and utilize in completing the work, such materials, appliances, supplies, plant and equipment as may be on the site of the work and necessary thereof.

30. CONTRACTOR'S RIGHT TO STOP WORK OR TERMINATE CONTRACT

If the work shall be stopped by order of the court or other public authority for a period of three (3) months without act or fault of the contractor or any of his agents, servants, employees or subcontractors, the contractor may, upon ten (10) days notice to the town, discontinue his performance of the work and/or terminate the contract; in which event, the liability of the Town immediately preceding (Paragraph 31), the contractor shall not be obligated to pay to the Town any excess of the expense of completing the work over the unpaid balance of the compensation to be paid to the contractor thereunder.

31. RESPONSIBILITY FOR WORK

The contractor agrees to be responsible for the entire work embraced in this contract until its completion and final acceptance by the Town of Riverhead. The contractor further agrees that any imperfect and/or damaged work that may be discovered at any time before the completion and acceptance of work shall be removed and/or replaced in conformity with the requirements of this contract without charge to the Town. Such removal and replacement will be performed as soon as practicable following receipt of written notice from the Town Engineer that the work is imperfect and/or damaged. The contractor further agrees that the inspection of the work by the Town Engineer of his or her designee shall not relieve him of any obligation to do sound and reliable work. Furthermore, such inspection and/or partial payment for work shall not preclude the Town Engineer from requiring removal and/or replacement at a later time. Neither shall such inspection or partial payment be deemed to be acceptance of any work.

32. USE OF PREMISES AND REMOVAL OF DEBRIS

The contractor expressly undertakes at his own expense:

(A) To store his apparatus, materials, supplies and equipment in such orderly fashion at the site of the work as will not unduly interfere with the progress of his work or the work of any of his subcontractors;

(B) To frequently clean up all refuse, rubbish, scrap materials and debris caused by the operations to the end that at all times, the site of the work shall present a neat, orderly and workmanlike appearance;

(C) Before final payment hereunder to remove all surplus material, temporary structures, plants of any descriptions and debris of every nature resulting from his operations.

33. SUITS OF LAW

The contractor shall indemnify and save harmless the Town and its employees from and against all suits, claims, demands or actions for any injury sustained or alleged to be sustained by any party or parties in connection with the construction of the work or any part thereof, or any commission or omission of the contractor, his employees or agents of any subcontractor, and in case of any such action shall be brought against the Town, the contractor shall immediately take charge of and defend the same at his own cost and expense.

34. POWER OF THE CONTRACTOR TO ACT IN AN EMERGENCY

In case of an emergency which threatens loss or injury to property and/or safety of life, the contractor will be permitted to act as he sees fit without previous instructions from the Town Engineer, or his representative. He shall notify the Town Engineer, or his representative thereof immediately and any compensation claimed by the contractor due to extra work made necessary because of his acts in such emergency shall be submitted to the town Engineer, or his representative, for approval.

Where the contractor has not taken action but has notified the Town Engineer, or his representative, of an emergency indicating injury to persons or damage to adjoining property or to the work being accomplished under this contract, then upon authorization from the Town Engineer, or his representative to prevent such threatened injury or damage, he shall act as instructed by the Town Engineer, or his representative. The amount of reimbursement claimed by the contractor on account of any such action shall be determined in the manner provided herein for the payment of extra work.

35. PROVISION REQUIRED BY LAW DEEMED INSERTED

Each and every provision of law and clause required by law to be inserted in this contract shall be deemed to be inserted herein and the contract shall read and be enforced as though it were included herein, and if trough mistake or otherwise, any such provision is not inserted, or is not correctly inserted, then upon the application of either party the contract shall be forthwith physically amended to make such insertion.

36. SUBLETTING – SUCCESSOR AND ASSIGNS

The contractor shall not sublet any part of the work under this contract nor assign any money due him hereunder without first obtaining the written consent of the town. This contract shall insure the benefit of and shall be binding upon the parties hereunder and upon their respective successors and assigns, but neither party shall assign or transfer his interest herein in whole or in part without consent of the other.

37. GENERAL MUNICIPAL LAW CLAUSE

Pursuant to the provisions of Section 103-a of the General Municipal Law, in the event that the bidder or any member, partner, director or officer of the bidder, should refuse, when called before a grand jury to testify concerning any transaction or contract had with the state, any political subdivision thereof, a public authority or any public department, agency or official of the state or of any political subdivision thereof or of a public authority, to sign a waiver of immunity against subsequent criminal prosecution or to answer any relevant question concerning such transaction or contract, such person, and any firm, partnership, or corporation of which he is a member, partner, director or officer shall be disqualified from thereafter selling to or submitting bids to or receiving awards from or entering into any contracts with any municipal corporation or any public department, agency or official thereof for goods, work or services for a period of five (5) years after such refusal, and any and all contracts made with any municipal corporation or any public department, agency or official thereof on or after the first day of July, 1959, by such person, and by any firm, partnership or corporation of which he is a member, partner, director or officer may be canceled or terminated by the municipal corporation without incurring any penalty or damages on account of such corporation for goods delivered or work done prior to the cancellation or termination shall be paid.

38. CONTRACTOR'S INSURANCE

The contractor shall not commence any work until he has obtained, and had approved by the Town, all the insurance required under this contract as enumerated herein:

Workers' Compensation Insurance
Public Liability and Property Damage Insurance
Contractor's Protective Liability and Property Damage Insurance
Owner's Protective Public Liability and Property Damage Insurance
Automobile Public Liability and Property Damage Insurance

The contractor shall not permit any subcontractor to commence any operation on the site until satisfactory proof of carriage of the above-required insurance has been posted with and approved by the Town.

(A) Workers' Compensation Insurance: The contractor shall take out and maintain, during the life of this contract, Workers' Compensation Insurance for all his employees employed at the site of the project, and in case of any of the work being sublet, the contractor shall require all subcontractors similarly to provide Workers' Compensation Insurance for all the latter's employees unless such employees are covered by the protection afforded by the contractor. Limits: statutory for Workers' Compensation, One Million Dollars ($1,000,000) Employers Liability.

(B) Public Liability and Property Damage Insurance: The contractor shall take out and maintain during the life of this contract such Public Liability and Property Damage Insurance as shall protect him or any subcontractor performing work covered by this contract from claims for damages for personal injury including accidental death as well as from claims for property damage which may arise from operations under this contract, whether such operations be completed by the contractor or by any subcontractor, or by anyone directly or indirectly employed by either of them, and the amounts of such insurance shall be as follows:

Public Liability Insurance in an amount not less than One Million Dollars ($1,000,000) combined single limit for bodily injuries, including wrongful death, and property damage. The Town of Riverhead must be named as an additional insured.

(C) Liability and Property Damage Insurance: the above policies for Public Liability and Property Damage Insurance must be so written as to include Contractor's Protective Liability and Property Damage Insurance to protect the contractor against claims arising from the operations of any subcontractor. The Town of Riverhead shall be named as additional insured.

(D) Owner's Protective Public Liability and Property Damage Insurance: The contractor shall furnish to the Town, with respect to the operations he or any of his subcontractors perform, a regular Protective Public Liability Insurance policy for, and in behalf of the Town, providing for a limit of not less than One Million Dollars ($1,000,000) for all damages arising out of bodily injuries to, or death of, one person and subject to that limit for each person, a total limit of One Million Dollars ($1,000,000) for all damages arising out of bodily injuries to, or death of, two or more persons in any one accident; and regular Protective Property Damage Insurance providing for a limit of not less than One Million Dollars ($1,000,000) for damages arising out of injury to, or destruction of, property during the liability of the Town. The coverage provided under this policy must not be affected if the Town performs work in connection with the project either for or in cooperation with the contractor or as an aid thereto whether the same be a part of the contract or separate therefrom, by means of its own employees or agents, or if the Town directs or supervises the work to be performed by the contractor.

(E) Automobile Public Liability and Property Damage Insurance: The contractor shall take out and maintain during the life of the contract such Automobile Public Liability and Property Damage Insurance as shall protect him and any subcontractor performing work covered by this contract from claims for damages for personal injury, including accidental death as well as form claims for property damage which may arise from operations under this contract, whether such operations be by himself or by a subcontractor or by anyone directly or indirectly employed by either of them and the amounts of such insurance shall be as follows:

Automobile Public Liability Insurance in an amount not less than One Million Dollars ($1,000,000) combined single limit for bodily injuries, including wrongful death, and property damage. The Town of Riverhead must be named as an additional insured.

Automobile Property Damage Insurance in an amount of not less than One Million Dollars ($1,000,000) for damages on account of any accident and in an amount of not less than One Million Dollars ($1,000,000) for damages on account of all accidents.

38A. HOLD HARMLESS CLAUSE

To the fullest extent permitted by law, the contractor shall indemnify and hold harmless the Owner and their agents and employees from and against all claims, damages, losses and expenses, including but not limited to attorneys' fees, arising out of or resulting from the performance of the work, provided that any such claim, damage, loss or expense (i) is attributable to bodily injury, sickness, disease or death, or to injury to or destruction of tangible property (other than the work itself) including the loss of use resulting therefrom and (ii) is caused in whole or in part by any negligent act or omission of the contractor, any subcontractor, anyone directly or indirectly employed by any of them or anyone for whose acts may be liable, regardless of whether or not it is caused in part by a party indemnified hereunder. Such obligation shall not be construed to negate, abridge, or otherwise reduce any other right or obligation of indemnity which would otherwise exist as to any party or person described in the paragraph.

39. CLAIMS AGAINST TOWN OFFICIALS AND EMPLOYEES

The Contractor expressly agrees and represents that the contractor shall make no claim and shall bring no action pursuant to any federal or state laws, including, but not limited to 42 U.S.C. § 1983, against any Town official or employee in his/her individual or personal capacity for any act, omission, or statement made or done relating to, or arising out of, this contract and expressly waives its rights to bring such a claim pursuant to any federal or state laws, including, but not limited to 42 U.S.C. § 1983.

40. PROOF OF CARRIAGE OF INSURANCE

The contractor shall furnish the Town with certificates of each insurer insuring the contractor under this contract except with respect to subdivision “D”. In respect to this paragraph, the contractor shall furnish the Town with the original insurance policy.

Both certificates, as furnished, and the insurance policy, as required, shall bear the policy numbers, the expiration date of the policy and the limits of liability thereunder. Both the certificates and the policy shall be endorsed to provide the Town with any notice of cancellation at least five (5) days prior to the actual date of such cancellation.

The insurance company utilized must have a minimum AM Best Rating of “A-VII”.

41. TERM OF CONTRACT

The term of this contract shall be until the completion date set by the Notice to Proceed and the length of contract time (calendar days) as stipulated in the Proposal Form. The Town of Riverhead shall have the option of extending this contract in six-month intervals up to a maximum of one additional year when mutually agreed upon by the Town and the contractor.

COPYRIGHT © 2018 BY H2M. ALL RIGHTS RESERVED.
NO PART OF THIS DOCUMENT MAY BE REPRODUCED OR DISTRIBUTED IN ANY FORM OR BY ANY MEANS WITHOUT THE PRIOR WRITTEN CONSENT OF H2M ARCHITECTS + ENGINEERS, MELVILLE, NEW YORK, USA.

A: SCH | PM: NICHOLAS F. BONO | LSB: JAMES J. FUCHS |
LSD: 7/9/2018 3:20 PM | LPD: 7/9/2018 3:20 PM | 15 MAY 2009| R#: 20 | P: 17 |
X:\RDSD (RIVERHEAD SEWER DISTRICT) - 10805\RDSD1801 841 OLD COUNTRY RD DESIGN\02-SPECS\0-FRONTEND\11 CONDITIONS OF CONTRACT - RDSD1801.DOC | CONDITIONS OF CONTRACT | RDSD 18-01 |

INDEX

1. DEFINITIONS
2. STANDARDS OF WORKMANSHIP
3. SAMPLES
4. MANUFACTURED MATERIALS
5. LABORATORY
6. SHOP DRAWINGS
7. PERMITS
8. CONTRACT DOCUMENT / PLANS AND SPECIFICATIONS
9. CUTTING, PATCHING AND DIGGING
10. ERRORS, OMISSIONS AND DISCREPANCIES
11. TEMPORARY TOILET
12. PROPER METHOD OF WORK AND WORK MATERIALS
13. INSPECTION
14. WAIVER
15. WATER AND ELECTRIC POWER
16. MACHINERY AND EQUIPMENT
17. RIGHT TO USE WORK
18. NOTICE OF WARNING
19. WARNING SIGNS
20. ACCIDENT PREVENTION
21. DAMAGES
22. MAINTENANCE OF TRAFFIC
23. PROTECTION OF LAND MARKERS, TREES, SHRUBS, AND PROPERTY
24. PROTECTION OF UTILTIES
25. APPROVAL OF SUBCONTRACTORS AND MATERIALS
26. INTERPRETATION OF DRAWINGS, ETC.
27. ADDITIONAL WORK
28. OCCUPATIONAL SAFETY AND HEALTH ACT
29. SAFETY PROVISIONS
30. SANITARY REGULATIONS
31. RESPONSIBILITY OF ENGINEER AND CONTRACTOR DURING CONSTRUCTION
32. LABOR
33. CONTRACTOR'S REPRESENTATIVE

34. SCHEDULE OF VALUES (LUMP SUM CONTRACTS)

35. INCOMPETENT EMPLOYEES

36. CLAIMS OR PROTESTS

37. NOTIFICATION, INTERFERENCE AND INJURY TO UTILITIES

38. INFRINGEMENT OF PATENTS

39. GUARANTEE/WARRANTY

40. STANDARDIZATION

1. DEFINITIONS

The "General Conditions" are hereby made part of these Specifications and are attached herein.

Where any article of the General Conditions is supplemented hereby, the provisions of such article shall remain in effect. All the supplemental provisions shall be considered as added thereto. Where any such article is amended, voided or superseded thereby, the provisions of such article not so specifically amended, voided or superseded shall remain in effect.

Work, materials, plant, labor and other requirements of the General Conditions shall be furnished by the Contractor. No direct payment will be made for these General Conditions, and payment shall be deemed to be included in the Contract price or various items of the entire Contract.

The words "or approved equal", as hereinafter used, shall refer to the use of an equal product that has received prior approval by the Consulting Engineer for the District.

1.1. DEFINITION OF TERMS

Whenever the following words and expressions are used in the Specifications, it is understood that they have the meaning defined below:

Plans: All official drawings or reproductions of drawings pertaining to the work or to any structure connected therewith.

Specifications: The body of directions, requirements, descriptions, etc. contained in this document, together with all documents of any description and agreements made (or to be made) pertaining to the methods or manner of performing the work and/or to the quantities and quality of materials to be furnished and accepted under this contract.

Town: Town Board of the Town of Riverhead.

Engineer: H2M architects + engineers., Consulting Engineer for the District.

Contract: Collectively, the contract executed by the Town and the contract, Notice to Bidders, Instruction to Bidders, Proposal Form, Form of Bond, Conditions of Contract, General Conditions, Specifications, Addenda, Performance Bonds, and all supplemental agreements made or to be made.

Inspector: An authorized representative of the Town assigned to make any and all necessary inspections of the work performed and the materials furnished by the contractor.

Materials: Any approved materials acceptable to the Town and conforming to the requirements of these specifications.

Work: All of the work proposed to be accomplished at the site of the project, and all such other work as is in any manner required to accomplish the complete project. This includes all plant, labor, materials, supplies, equipment and other facilities and acts necessary or proper or incidental to the carrying out and completion of other terms of this contract. The term “work performed” shall be construed to include the materials delivered to and suitably stored at the site of the project.

2. STANDARDS OF WORKMANSHIP

The apparent silence of the specifications as to any detail or and apparent omission from them of a detailed description concerning any work to be done and materials to be furnished shall be regarded as meaning that only the best general practice observed in the latest current construction work is to prevail and that only material and workmanship of first quality is to be used in this connection and all interpretations of these specifications shall be made upon this basis.

3. SAMPLES

The contractor shall furnish for approval, all samples as directed. The work shall be in accordance with approved samples. Samples shall be submitted in ample time so as to prevent delay in fabrication or ordering of materials, allowing for a reasonable time for the Town Engineer, or his representative, to consider the samples submitted, and is necessary, to permit a re-submission of samples to the Town, or its representative, until approval is given.

Work and material shall be furnished and executed in accordance with approved samples, in every aspect. Each sample shall be labeled, bearing material, name and quality, contractor's name, date and other pertinent data. Unless otherwise specified, samples shall be in duplicate and of adequate size to show quality, type, color, range and finish and texture of material. Materials shall not be ordered until approval is received in writing from the Town, or its representative.

4. MANUFACTURED MATERIALS

Where several materials are specified by name, the Town, or its representative, shall have the right, before execution of the contract, to require any and all bidders to state the materials upon which they based their bid. Where any materials are specified by name or trade name, or by catalog number of a company or companies, the contractor shall furnish the article mentioned unless approval of the Town, or itis representative, is obtained in writing for a substitution. Should the contractor desire to substitute other materials for one or more specified by name, he shall apply in writing for such permission and state credit or extra involved. He shall also provide supporting data and samples for the consideration of the Town.

Unless particularly specified otherwise, all manufactured articles, materials and equipment shall be applied, assembled, installed, connected, erected, used, cleaned and conditioned as directed by the manufacturer and including the necessary preparation to properly install the work. Where reference is made to manufacturer's directions, the contractor shall submit such directions to the Town or its representative as required.

The materials used in construction shall be disposed so as not to endanger the work, and so that full access may at all times be had to partly completed work and structures and they shall be so disposed as to cause no injury to those having access to the work or any of the units.

All labor shall be performed in the best and most workmanlike manner by mechanics skilled in their respective trades. Standards of work required throughout shall be of such grades as will bring first-class results only. The type of labor employed by the contractor shall be such as will insure the uninterrupted continuity of the entire work, without conflict of any kind.

5. LABORATORY

Laboratories shall be approved by the Town, or its representative, for testing the materials to be used under the contract. Where tests are made, two certified copies showing correctly the chemical analysis and physical tests shall be furnished to the Town, or its representative.

6. SHOP DRAWINGS

The contractor shall submit to the Town Engineer, six (6) copies of all shop drawings and schedules and no work shall be fabricated until his approval has been given. All shop drawings submitted to the Town Engineer must bear the contractor's stamp of approval evidencing that the drawings have been checked.

The contractor will make any corrections in the drawings required by the Town or its representative and will file with the Town or its representative six (6) corrected copies. Approval by the Town Engineer of such drawings or schedules shall not relieve the contractor from responsibility for:

(a) Errors of any sort in shop or setting drawings or schedules;
(b) Deviations from Plans and Specifications unless the contractor, at the time of submission of said drawings and schedules, has given notice to the Town or its representative of any such deviations.

7. PERMITS

7.1 Municipal: All work in connection with the installation of pipes or other underground structures of a like nature either within or without the limits of the highway, shall follow all the provisions as contained herein together with the provisions, as they apply, of the Highway Law, Road Openings, Section 149 and Section 198 of Town law, with all subsequent changes, additions or corrections thereto.

7.2 Suffolk County: All permits required for opening country roads and making connections with county drains will be obtained by the Contractor unless otherwise stated in the Contract documents. A copy of the permit must be kept on the job site at all times. The contractor will not be permitted to open any county road or make any connection to any county drain until he has obtained required permits.

7.3 State of New York: The contractor shall obtain all necessary New York State highway permits whenever the contract requires any work to be done within or upon existing state highway right-of-ways. These permits shall be obtained from the District Office in Hauppauge prior to the performance of the work. Upon application for the permit, the contractor will be required to supply the following:

(1) Three (3) copies of a sketch or print showing description and location of the proposed work. These prints will be supplied to the contractor by the Town or its representative.

(2) Contingent liability insurance for the state (in addition to his own liability insurance) shall be furnished in amounts and manner as required by the State of New York. The contingent protective liability and complete operations liability insurance policy to cover:

"The people of the State of New York and/or the Highway Superintendent covering liability arising with respect to all operations through highway permits by permitted by anyone acting by, through or for the permitted, including omissions and supervisor acts of the State", in the amount of personal injury (including death) and property damage as required.

8. CONTRACT DOCUMENTS

The Contract Documents include, but are not limited to, the General Conditions, General Specifications, Detailed Specifications, Plans, Proposal, Contract and other sections as either cited on the Index page(s) or actually included in the bound documents.

Each section of the Contract Documents is intended to be complementary to the other sections.

It is intended that they include all items of labor and materials and everything required and necessary to complete the work, even though some items of work or materials may not be particularly mentioned in every section or may have been inadvertently omitted from the Drawings or Specifications or both.

The contractor will be furnished with five (5) sets of Plans and Specifications giving all the details and dimensions necessary for carrying out the work. One copy of Plans and Specifications furnished to the contractor must be kept constantly at the site. Anything shown on the Plans and not mentioned in the Specifications or mentioned in the Specifications and not shown on the Plans and all work and materials necessary for the completion of the work according to the intent and meaning of the contract shall be furnished, performed and done as if the same were both mentioned in the Specifications and shown on the Drawings. Any conflict or inconsistency between the figures and scale of Drawings shall be submitted by the contractor to the Town Engineer, or his representative, whose decisions hereon shall be conclusive.

In the event the meaning of any portion of the Specifications or Drawings or any supplementary drawings or instructions of the Town Engineer, or his representative, is doubtful, the same shall be understood to call for the best type of construction, both as to materials and workmanship, which reasonably can be interpreted.

All materials and workmanship must be strictly in accordance with the Plans and Specifications.

Additional copies of Plans and Specifications, when requested will be furnished to the contractor at cost of reproduction.

The contractor shall furnish to each of the subcontractors and materials men such copies of the Contract Documents as may be required for their work.

9. ERRORS, OMISSIONS AND DISCREPANCIES

a) If any errors, omissions or discrepancies appear in the drawings, specifications or other documents, the contractor shall, within ten (10) days from receiving such drawings, specifications or documents, notify the Town, or its representative, in writing of such errors or omissions. In the event of the contractor's failing to give such notice, he will be held responsible for the results of any such errors or omissions and the cost of rectifying the same.

b) If, in the opinion of the contractor, any work is shown on drawings, or details, or is specified in such a manner as will make it impossible to produce a first-class piece of work, or should discrepancies appear between the drawings and/or specifications, he shall refer the same to the Town, or its representative, for interpretation before proceeding with the work. If the contractor fails to make such references to the Town, or its representative, no excuse will thereafter be entertained for failure to carry out the work in a satisfactory manner as directed.

c) Should a conflict occur in or between the drawings and specifications and/or existing conditions, the contractor shall be deemed to have estimated on the more expensive way of doing the work, unless he shall have asked for and obtained the decision in writing from the Town Engineer or his representative, before the submission of bids, as to which method or materials will produce the results to the best interests of the Town.

10. TEMPORARY TOILET

The contractor shall provide and maintain a sanitary temporary toilet where directed by the Town, or its representative. The temporary toilet shall be enclosed, weatherproof and kept in a sanitary condition at all times. Upon removal of the temporary outside toilet, and all evidence of the toilet shall be removed from the site.

11. CUTTING, PATCHING AND DIGGING

The contractor shall do all cutting, fitting or patching of his work that may be required to make its several parts come together properly and fit it to receive or be received by work of other contractors shown upon or reasonably implied by Drawings and Specifications for the completed structure, and he shall make good after them as the Town, or its representative may direct. Any cost caused by defective or ill-timed work shall be borne by the party responsible therefore.

The contractor shall not endanger any work by cutting, digging or otherwise, and shall not cut or alter the work of any other contractor except with the consent of the Town, or its representative.

12. PROPER METHOD OF WORK AND PROPER MATERIALS

The Town, or its representative, shall have the power in general to direct the order and sequence of the work, which shall be such as to permit the entire work under this contract to be begun and to proceed as rapidly as possible and such as to bring the several parts of the work to a successful completion at about the same time.

If at anytime before the commencement or during the progress of the work the materials and appliances used or to be used appear to the Town Engineer, or his representative, as insufficient or improper for assuring the quality of the work required, or the required rate of progress, he may order the contractor to increase their efficiency of to improve their character, and the failure of the Town, or its representative, to demand any increase of such efficiency or improvement shall not release the contractor from his obligation to secure the quality of work or the rate of progress specified.

During freezing or inclement weather, no work shall be done except such as can be done satisfactorily and in a manner to secure first class construction throughout. All work shall be done in such a manner as will properly protect and support existing permanent structures, pipe lines, etc.

13. INSPECTION

Inspectors shall be authorized to inspect all work done and materials furnished. Such inspections may extend to all parts of the work and to the preparation or manufacture of the materials to be used. In case of any dispute arising between the contractor and the inspector as to materials furnished or the manner of performing the work, the inspector shall have the authority to reject material or suspend the work until the question at issue shall be referred to and decided by the Town, or its representative. The inspector shall not be authorized to revoke, alter, enlarge, relax or release any requirements of these specifications; nor approve or accept any portion of the work; nor issue instruction contrary to the plans and specifications. The inspector shall in no case act as foreman or perform other duties for the contractor or interfere with the management of the work by the latter.

Any advice which the inspector may give the contractor shall in no way be construed as binding the Town, or its representative, nor the Town in any way, nor releasing the contractor from the fulfillment of the terms of the contract.

The contractor shall be conclusively presumed to be acquainted with all existing conditions and to guarantee that all work and materials shall, upon final completion of the work, be turned over to the Town in a complete and perfect condition and the contractor shall be responsible for the proper care, maintenance and protection of all work and material until his entire contract is completed and all work and materials found in good condition and accepted. The contractor will be held responsible for the entire work until completed and accepted by the Town.

The contractor shall, at all times, provide the Town, and its representative, assistants and inspectors under him with necessary facilities for determining both on the job and at the places of manufacture, that all work being performed and all materials being manufactured are strictly in accordance with the contract.

Until acceptance of work by the Town, the contractor shall be responsible for all damages to the work including action of the elements or any other cause whatsoever. The contractor shall continuously and adequately protect the work against damage from any cause.

14. WAIVER

Neither the inspection by the Town, its representative or any part of their employees, nor any order, measurement or certificate by the Town, or its representative, nor any order by the Town for the payment of any money, nor any payment for or acceptance of, the whole or any part of the work by the Town, its representative, or the Town, nor any extension of time, nor any possession taken by the Town or its employees shall operate as a waiver of any provision of this contract or of any power herein reserved to the Town or any right to damages herein provided; nor shall any waiver of any breach of the contract constitute a waiver of any subsequent breach. Any remedy provided in this contract shall be construed as cumulative in addition to each and every remedy herein provided.

15. WATER AND ELECTRIC POWER

All water and electric power supply for construction purposes must be provided by the contractor. The cost shall be borne by the contractor.

16. MACHINERY AND EQUIPMENT

All machinery, equipment, trucks and vehicles used in the prosecution of the work or in connection therewith, shall at all times be in proper working condition.

The contractor shall be responsible for curtailing noise, smoke, fumes, or any other nuisance resulting from his operations. He shall, upon written notification from the Town, or its representative, make any repairs, replacements, adjustments, and additions and furnish mufflers when necessary to fulfill these requirements.

17. RIGHT TO USE WORK

The Town may enter upon and use the whole or any portion of the work, which may be in condition to use any time previous to its final acceptance by the Town. Such use shall not constitute or be evidence of acceptance by the Town of the whole or any part of the material furnished or work performed under the contract.

18. NOTICE OF WARNING

If the contractor shall fail to make prompt payment to persons supplying labor or materials for the work, or refuse or fail to supply enough properly skilled workmen or proper materials or refuse or fail to prosecute the work or any part thereof with such diligence as will insure its completion within the period herein specified (or any duly authorized extension thereof) or fail to complete the work within said period or refuse or fail to regard laws, ordinances, codes, instruction of the Town, or its representative, then the Town shall forward by registered mail to the contractor, at the address given in the contract, a Notice of Warning, and in the event the contractor fails to comply with said Notice of Warning within five (5) days from receipt thereof, the Town shall have the right to terminate the contract.

19. WARNING SIGNS

Contractor shall provide and maintain proper luminous warning and detour signs where directed by the Town, or its representative.

Obstruction, such as stored materials, equipment and excavations shall be marked with no less than two (2) lights which shall be no more than four (4) feet apart.

All lights shall be kept burning from one-half hour before sunset until one-half hour after sunrise.

20. ACCIDENT PREVENTION

During the performance of the work, the contractor shall exercise all reasonable precautions for the protection of persons and property. The safety provisions of applicable laws, building and construction codes shall be observed. Machinery, equipment and all other physical hazards shall be guarded in accordance with the safety provisions of the Manual of Accident Prevention in Construction published by the Associated General Contractors of America to the extent that such provisions are not inconsistent with federal, state or municipal laws or regulations.

If any operation, practice or condition is deemed by the Town, or its representative, to be unsafe, he shall notify the contractor in writing to take corrective action. Where in the opinion of the Town, or its representative, any operation, practice or condition shall be promptly discontinued and before the affected part of the work is resumed, remedial action taken.

The Town reserves the right to remedy any neglect on the part of the contractor as regards the protection of the work which may come to its attention, after twenty-four (24) hours notice in writing; except that in cases of emergency, it shall have the right to remedy any neglect without notice, and in either case to deduct the cost of such remedy from money due the contractor.

Nothing in the foregoing paragraphs shall be construed as relieving the contractor from full responsibility at all times for safe prosecution of the work.

21. DAMAGES

The contractor shall pay and make good all losses or damages arising out of any cause connected with the contract and shall indemnify and save harmless the Town, and its representatives, from any and all claims and any and all liability or responsibility of every nature against the Town or any of its officers or agents, by reason of, or connected with the work or materials furnished under the contract and shall pay all costs and expenses of every kind, character, and nature whatsoever, occurring upon or arising out of the contract.

All damages, direct or indirect, of whatever nature either resulting from the performance of or resulting to the work under this Contract during its progress from whatever cause shall be borne and sustained by the Contractor, and all work shall be solely at its risk until the date of the final payment request, as prepared by the Engineer.

22. MAINTENANCE OF TRAFFIC

All work under this contract is to be completed within the time indicated in the Contract Agreement or as extended by the Town. If in the meantime it should become necessary, because of the lateness of the season, or any other reason to stop work, the contractor shall at his own expense, open proper drainage

ditches, erect temporary structures where necessary, prepare the roads so there will be minimum interference with traffic, set up and maintain a competent organization as directed by the Town, or its representative, to keep the highways in first class condition for traffic, and take every precaution to prevent any damage or unreasonable deterioration of the work during the time it is closed.

23. PROTECTION OF LAND MARKERS, TREES, SHRUBS, AND PROPERTY:

Wherever in the conduct of the work, a monument making a point of public or private survey is encountered or brought to view by excavation, the fact shall at once be communicated to the Town, or its representative. In no case shall the contractor remove the same until the location for resetting shall have been made by the Town, or its representative. All monuments or land markings exposed to view when the work is first undertaken shall be carefully preserved and the greatest care exercised to prevent injury to or disturbance of position of the monument.

The unit price of all items shall include the cost of restoring to its former condition any sidewalks or curbs, as well as restoring any trees, shrubs or lawns that may be damaged during this construction. No additional payment will be made.

The contractor is required at his own expense to obtain any and all permits for use of private property if he uses such property for storage, transportation or accomplishment of the work under the contract. Private property shall be cleaned up neatly, any damage repaired and premises restored to their original condition.

24. PROTECTION OF UTILITIES

The contractor shall familiarize himself with the existence of structures of municipal and other public service corporations on or adjoining the site of the work, for the area within the scope of the contractor's work. The contractor shall be responsible for calling for a mark out given reasonable opportunity to work in cooperation with the owners of these utilities in the work, reconstruction or alteration of these structures. Such reconstruction and alteration shall be so conducted as to delay or interfere as little as practicable with the work of the contractor. Any additional cost of various items or work because of these utilities shall be included in the price bid for these items.

The Town, or its representative, shall direct the public utility corporations to shift or remove those utility structures that may be necessary to permit the contractor to carry out the work in accordance with the plans. The contractor shall not remove or cause to be removed, any structure or part of a structure owned by a public utility corporation without the approval of the Town, or its representative.

The contractor shall cooperate with the public utility corporation whose structures (aerial, surface or subsurface) are within the limits of or along the outside of the right-of-way, to make it possible for them to maintain uninterrupted service. The contractor shall conduct his operations in such a way as not to delay or interfere as little as practicable with the work of the utility corporation.

25. APPROVAL OF SUBCONTRACTORS AND MATERIALS

Prior to commencing any work under this Contract, the Contractor shall submit to the Engineer for approval a list of all the subcontractors and material suppliers it proposes to use for this Contract.

No subcontractor or material supplier will be permitted to deliver materials or perform any work on this Contract until it has been approved by the Engineer.

26. INTERPRETATION OF DRAWINGS, ETC.

In the event of discrepancies between the Drawings and the Specifications, the following order shall be given preference when making interpretations:

a. Addenda (later dates to take precedence over earlier dates).

b. Drawings (schedules or notes to take precedence over other data shown on Drawings).

c. Detailed Specifications

d. General Specifications

On all Plans, Drawings, etc., the figure dimensions shall govern in the case of discrepancy between the scales and figures.

The Contractor shall take no advantage of any error or omission in the Plans, or of any discrepancy between the Plans and Specifications, and the Engineer shall make such corrections and interpretations as may be deemed necessary for the fulfillment of the intent of the Specifications and of the Plans as construed by him, and his decision shall be final.

All work that may be called for in the Specifications and not shown on the Plans, or work shown on the Plans and not called for in the Specifications, shall be furnished and executed by the Contractor as if designated in both. Should any work or material be required which is not denoted in the Plans and Specifications, either directly or indirectly, but which is necessary for the proper carrying out of the intent thereof, it is understood and agreed that the same is implied and required, and that the Contractor shall perform such work and furnish such materials as if they were completely delineated and described.

27. ADDITIONAL WORK

Additional work, if required to be performed under this Contract, shall be in accordance with the applicable paragraphs of the Contract. The Town will be the sole judge as to whether such work was intended as part of the Contract or is in addition thereto.

28. OCCUPATIONAL SAFETY AND HEALTH ACT

The Contractor shall meet all standards of the Occupational Safety and Health Act of 1970 and subsequent revisions. This shall include, but not be limited to, the following areas:

Sanitation, noise, radiation, gases, vapors, fumes, mists, dust, illumination, ventilation, protective equipment, fire protection, waste disposal, electrical hazards, scaffolds and ladders, floor holes and wall openings, heavy equipment and permit-required confined spaces.

All specific requirements of the Act shall be adhered to.

29. SAFETY PROVISIONS

The Contractor shall take every precaution and shall provide such equipment and facilities as are necessary or required for the safety of its employees. In case of an accident, first aid shall be administered to any who may be injured in the progress of the work. In addition, the Contractor shall also be prepared for the removal to the hospital for treatment of any employee either seriously injured or ill.

30. SANITARY REGULATIONS

In addition to compliance with the Occupational Safety and Health Act, the Contractor shall erect and maintain necessary sanitary conveniences for the use of employees on the work. Such conveniences shall be properly secluded from observation, and their use shall be strictly enforced. Such sanitary conveniences shall be constructed in compliance with all laws, ordinances or regulations governing these facilities. The contents of same shall be removed with sufficient frequency to prevent nuisance, and disposed of to the satisfaction of the Town, or its representative.

The Contractor shall obey and enforce such other sanitary regulations and orders and shall take such precautions against infectious diseases as may be deemed necessary. In case any infectious diseases occur among its employees, it shall arrange for the immediate removal of the patient from the work and his isolation from all persons connected with the work.

The building of shanties or other structures for housing the workers, tools, machinery or supplies will be permitted only at approved places, and the sanitary condition of the grounds in and at such shanties or other structures must, at all times, be maintained in a satisfactory manner.

31. RESPONSIBILITY OF ENGINEER AND CONTRACTOR DURING CONSTRUCTION

The Engineer is responsible solely for the general and/or detailed inspection of the work being performed. Such inspection will be periodic and strictly to assure conformance of the Contractor with the Plans and Specifications, such that the end product will conform to the Plans and Specifications.

The Contractor is responsible for complete conformance to the Plans and Specifications, proper construction procedures, coordination with subcontractors, other contractors and utilities, and safe working conditions for its employees.

32. LABOR

All contractors and subcontractors employed upon the work shall and will be required to conform to the Labor Laws of the State of New York and the various acts amendatory and supplementary thereto; and to all other laws, ordinances and legal requirements applicable thereto.

All labor shall be performed in the best and most workmanlike manner by mechanics skilled in their respective trades. The standards of the work required throughout shall be of such grade as will bring results of the first class only.

33. CONTRACTOR'S REPRESENTATIVE

The Contractor, in case of his absence from the work, shall have a competent representative or foreman present, who shall follow without delay all instructions of the Engineer or his assistants in the prosecution and completion of the work, in conformity with this Contract, and shall have full authority to supply labor

and material immediately. The Contractor shall also have a competent representative available to receive telephone messages and provide a reasonable reply as soon as possible, but not later than 24 hours.

34. SCHEDULE OF VALUES (LUMP SUM CONTRACTS)

Before the first partial payment under this Contract becomes due, the Contractor shall prepare a Schedule of Values which totals the amount of the Contract and submit it to the Engineer for approval. The Contractor shall make such revisions as may be required to make this Schedule conform to the true value of work as jointly agreed upon by the Engineer and the Contractor. The Contractor shall submit the Schedule of Values in accordance with the requirements contained in Section 012973.

35. INCOMPETENT EMPLOYEES

The Contractor shall employ only competent, skilled and faithful workers to do the work. Upon request of the Engineer in writing, the Contractor shall suspend or discharge from the work any disobedient, disorderly or incompetent person or persons employed thereon, and will not again employ any person so suspended or discharged without the consent of the Engineer.

This requirement shall not be made on the basis of any claim for compensation or damages against the District or any of its officers or agents.

36. CLAIMS OR PROTESTS

If the Contractor considers any work required of it to be outside the requirements of the Contract or considers any record or ruling of the Engineers or Inspectors as unfair, it shall ask for written instructions or decisions immediately, and then file a written protest with the District against the same within five (5) days thereafter, or be considered as having accepted the record or ruling.

37. NOTIFICATION, INTERFERENCE AND INJURY TO UTILITIES

The Contractor shall cooperate in every way with the utility companies.

All excavation shall be done in compliance with Article 36 of the General Business Law and notices given as provided by CLS General Business Law, Part 761.

All conduits, water mains and gas mains encountered in the construction shall be properly and safely taken care of by the Contractor, who shall, upon encountering same, notify the public corporation to whom they belong in order that they may be changed in such a manner as not to interfere with the final construction.

In case any damage shall result to any service pipe for water or gas, or any private or public sewer or conduit, by reason of negligence on the part of the Contractor, the Contractor shall, without delay and at its own expense, repair the same to the satisfaction of the Engineer. If such repairs are not made promptly or satisfactorily, the District may have the repairs made by another Contractor or otherwise, and deduct the cost of same from any monies due or to become due the Contractor.

38. INFRINGEMENT OF PATENTS

The Contractor further agrees to hold itself responsible for any claims made against the District for any infringement of patents by the use of patented articles in any one phase of construction of the work and the completion of same, or any process connected with the work agreed to be performed under this Contract or of any materials used upon said work, and to save harmless and indemnify the District from all

costs, expenses and damages which the District shall be obliged to pay by reason of any infringement of patents used in the construction and completion of the work.

39. GUARANTEE/WARRANTY

The Contractor shall guarantee and warrant its work and that of its subcontractors against defects in workmanship and/or materials for a period of one (1) year from the date of the final payment request, as prepared by the Engineer, except as otherwise specified. Upon written notification from the Engineer, the Contractor shall repair, replace or reconstruct such defects to the satisfaction of the Engineer, at no cost to the District.

40. STANDARDIZATION

The Detailed and General Specifications indicate specific manufacturers and/or catalog numbers, etc., for the purpose of standardization within the District in order to minimize stockpiling of replacement parts.

COPYRIGHT © 2018 BY H2M. ALL RIGHTS RESERVED.
NO PART OF THIS DOCUMENT MAY BE REPRODUCED OR DISTRIBUTED IN ANY FORM OR BY ANY MEANS WITHOUT THE PRIOR WRITTEN CONSENT OF H2M ARCHITECTS + ENGINEERS, MELVILLE, NEW YORK, USA.

A: SCH | PM: NICHOLAS F. BONO | LSB: NICHOLAS F. BONO |
LSD: 7/9/2018 3:22 PM | LPD: 7/9/2018 3:22 PM | 15 MAY 2009| R#: 19 | P: 14 |
X:\RDSD (RIVERHEAD SEWER DISTRICT) - 10805\RDSD1801 841 OLD COUNTRY RD DESIGN\02-SPECS\0-FRONTEND\12 GENERAL CONDITIONS - RDSD1801.DOC | GENERAL CONDITIONS | RDSD 18-01 |

1.0 - INDEMNITY

The Contractor and all subcontractors performing work in connection with this Contract shall HOLD HARMLESS, INDEMNIFY and DEFEND the Owner and Engineer, their consultants and each of their officers, agents and employees from any liability, claims, losses or damage including reasonable costs of defense arising out of or alleged to arise from the Contractor's or subcontractor's negligence in the performance of the work described in the Contract Documents, but not including liability that may be due to the sole negligence of the Owner, the Engineer or their officers, agents and employees.

2.0 - NO CLAIM FOR DELAY

The Contractor and all subcontractors agree to HOLD HARMLESS from any and all claims for loss or damages of any nature against the Owner or Engineer for delays in commencement, performance or completion of the Contract, regardless of whether said delays are, or may be, caused by the Owner, Engineer or any governmental agency.

COPYRIGHT © 2018 BY H2M. ALL RIGHTS RESERVED.
NO PART OF THIS DOCUMENT MAY BE REPRODUCED OR DISTRIBUTED IN ANY FORM OR BY ANY MEANS WITHOUT THE PRIOR WRITTEN CONSENT OF H2M ARCHITECTS + ENGINEERS, MELVILLE, NEW YORK, USA.

A: SCH | PM: NICHOLAS F. BONO | LSB: JAMES J. FUCHS |
LSD: 7/9/2018 3:23 PM | LPD: 7/9/2018 3:23 PM | 8 APRIL 2009| R#: 18 | P: 1 |
X:\RDSD (RIVERHEAD SEWER DISTRICT) - 10805\RDSD1801 841 OLD COUNTRY RD DESIGN\02-SPECS\0-FRONTEND\13 ILL.DOC | 1.0 - INDEMNITY | RDSD 18-01 |

TOWN OF RIVERHEAD / RIVERHEAD SEWER DISTRICT
841 OLD COUNTRY ROAD SEWER MAIN & EASEMENT RELOCATION
CONTRACT RDSD 18-01, CONTRACT S, SEWER CONSTRUCTION
RIVERHEAD, NEW YORK

CONTRACT DATED_____, 201 ___ BY AND BETWEEN THE TOWN OF RIVERHEAD (HEREIN CALLED THE "OWNER" AND _____
(HEREIN CALLED THE "CONTRACTOR")

WITNESSETH, the Town and the Contractor, in consideration of the premises and of the mutual covenants, considerations and agreements contained, agree as follows:

The Notice to Bidders, Instruction to Bidders, Proposal Form, Form of Bond, Conditions of Contract, General Conditions, Specifications, Form of Contract, Construction Drawings, and Plans, together with any Addenda, shall form part of this contract, and the provisions thereof shall be as binding upon the parties hereto as if they were herein fully set forth. The Table of Contents, title, heading, headlines and marginal notes contained herein are solely to facilitate reference to various provisions of the Contract Documents and in no way affect, limit or case light upon the interpretation of the provisions to which they refer. Whenever the term "Contract Documents" is used, it shall mean and include the Notice to Bidders, Instruction to Bidders, Proposal Form, Form of Bond, Conditions of Contract, General Conditions, Specifications, Form of Contract, Construction Drawings, and any Addenda. In case of any conflict or inconsistency between the provisions of the conditions of this contract shall govern.

IN WITNESS THEROF, the parties hereunto set their hands and seals, and such of them as are corporations have caused these presents to be signed by their duly authorized officers.

NOTE: Quantities of any or all items may be increased, decreased or eliminated in their entirety at the option of the Town prior to or after award of the contract.
Total BID

_____($_____)
(written in words) (figures)

ATTEST: TOWN OF RIVERHEAD

_____
SUPERVISOR

_____
CONTRACTOR

_____
TITLE

STATE OF NEW YORK
)
)ss:
COUNTY OF _____)

On this _____ day of _____, 201____ before me personally appeared

_____.
(Town Supervisor)

The duly elected and qualified Supervisor of the Town of Riverhead, the corporation described in and which executed the foregoing instrument, to me known and known to me to be such Supervisor of the Town of Riverhead; and he being by me duly sworn did depose and say; that he is the Supervisor of the Town of Riverhead; that he resided at

_____, Suffolk County, New York; that he knows the corporation seal of said Town of Riverhead; that the seal affixed to said instrument is such corporate seal; and that he executed the same as such Supervisor for the purpose herein mentioned.

_____
Notary Public

Acknowledgement by Contractor if a PARTNERSHIP

STATE OF NEW YORK)
)ss:
COUNTY OF _____)

On this _____ day of _____ 201 __, before me personally appeared _____ to me known to by the person described in and who executed the foregoing instrument and who acknowledged to me that he executed the same.

_____
Notary Public

Acknowledgement by Contractor if a PARTNERSHIP

STATE OF NEW YORK)
)ss:
COUNTY OF _____)

On this _____ day of _____, 201 __ before me personally came _____ to be known and known to be to a member of _____ the firm described in and which executed the foregoing instrument and he acknowledged to me that he subscribed the name of said firm thereto on behalf of said firm for the purpose therein mentioned.

_____
Notary Public

Acknowledgement by Contract if a CORPORATION

STATE OF NEW YORK)
)ss:
COUNTY OF _____)

On this _____ day of _____, 201 __, before me personally came _____ to me known, who being by me duly sworn, did depose and say that he resides at _____of _____in the state of _____ that he is the _____of the _____ the corporation described in and which executed the foregoing instrument; that he knows the seal of said corporation; that the seal affixed to said instrument is such corporate seal; that it was so affixed by order of the Board of Directors of said Corporation; and that he signed his name thereto by like order.

_____
Notary Public

COPYRIGHT © 2018 BY H2M. ALL RIGHTS RESERVED.
NO PART OF THIS DOCUMENT MAY BE REPRODUCED OR DISTRIBUTED IN ANY FORM OR BY ANY MEANS WITHOUT THE PRIOR WRITTEN CONSENT OF H2M ARCHITECTS + ENGINEERS, MELVILLE, NEW YORK, USA.

A: SCH | PM: NICHOLAS F. BONO | LSB: JAMES J. FUCHS |
LSD: 7/9/2018 3:23 PM | LPD: 7/9/2018 3:23 PM | 15 MAY 2009| R#: 31 | P: 4 |
X:\RDSD (RIVERHEAD SEWER DISTRICT) - 10805\RDSD1801 841 OLD COUNTRY RD DESIGN\02-SPECS\0-FRONTEND\14 FORM OF CONTRACT - RDSD 1801.DOC | FORM OF CONTRACT | RDSD 18-01 |

PART 1 - GENERAL

1.1 BRIEF PURPOSE OF PROJECT / GENERAL

A. The purpose of the project is to relocate the existing sewer main and sanitary sewer easement located within Suffolk County tax lot 0600-104-02-03 (Riverhead Church of Christ) to offset around the proposed fuel facility planned to be constructed at 841 Old Country Road.

B. All work shown and specified in the Contract Documents shall be work of this Construction Contract. The Owner does not anticipate awarding other prime contracts for the project as shown.

C. This Section provides an abbreviated summary of the work for the Construction Contract associated with the Owner's program to construct the project.

1.2 NOMENCLATURE

A. Where the terms "Engineer/Architect" or "Architect/Engineer" are used throughout these Contract Documents, they shall mean the firm of H2M architects + engineers, D.P.C. as may be abbreviated by H2M.

B. The terms "Contractor" and/or "Prime Contractor" where used shall refer to the individual or company who has entered into an agreement with the Owner to perform the work contained within these Contract Documents. The lack of word capitalization shall be incidental.

C. The General Construction Contractor may be referred to as the "General Contractor", "Prime General Contractor", "Contract S Contractor" or similar wording. The lack of word capitalization shall be incidental. This Construction Contract shall be known as Contract S.

1.3 ABBREVIATED SUMMARY OF WORK

A. Furnish all labor, equipment, materials, tools, means, methods, and incidentals necessary to complete the Work as required by the Contract Documents for this Construction Contract.

B. This following abbreviated summary is provided in order to briefly describe the work covered by the Contract Documents for this Construction Contract. It is not all inclusive of the work under the Contract.

C. The work includes, but is not limited to, the following:

D. The installation of approximately 90 LF of new 8-inch diameter PVC gravity sewer, three (3) new sanitary manholes and a sewer service lateral assembly with a pipe stub extending to the easement boundary to provide a future sewer connection installation.

E. Testing.

F. Restoration.

G. All other work shown and specified within the Contract Documents.

1.4 PARTIAL LISTING OF SPECIFIC CONTRACT REQUIREMENTS

A. The Contract Documents detail the work included in the Contract. Related requirements and conditions covered by the Contract Documents include, but is not limited to, the following:

B. Local laws and ordinances of the Town of Riverhead

1.5 PARTIAL LISTING OF OVERALL CONTRACT REQUIREMENTS

A. The Contract Documents detail the work included in the Contract. Related requirements and conditions covered by the Contract Documents include, but are not limited to, the following:

1. Debris removal, street sweeping, and daily and final cleaning up.

2. Coordination with utility companies and property owners as necessary to schedule connection of services, and management of the installation.

3. Site utilization and management so as not to disrupt the daily operation of the businesses on Old Country Road and Ostrander Avenue.

4. Product and equipment storage and handling requirements.

5. Site safety in accordance with all applicable federal, state, and local regulations.

6. Maintenance and protection of traffic.

7. Erosion control.

8. Project submittals, meetings, professional photographs, testing services, work plans, schedules, shop drawings, closeout procedures and documents, manuals, as-built drawings, and final commissioning of the work shall be provided as required by the Contract.

1.6 OWNER SUPPLIED PRODUCTS AND UTILITIES

A. The Owner will not be supplying equipment, labor, or tools for the project.

1.7 EXISTING CONDITIONS

A. The Drawings show certain information that has been obtained by the Owner regarding various pipelines, utilities, and structures that exist at the location of the project both below and at grade.

B. The Owner and the Engineer expressly disclaim all responsibility for the accuracy or completeness of the information given on the Drawings with regard to existing facilities.

C. In the case where the Contractor discovers an obstruction not indicated on the Drawings or not described via specification reference, then the Contractor shall immediately notify the Engineer of the obstructions' existence.

D. The Engineer will determine if the obstruction is to be relocated or removed.

E. Compensation for this extra work will be paid for in accordance with the provisions in the Contract for “Extra Work”.

PART 2 - PRODUCTS

Not Used

PART 3 - EXECUTION

Not Used

END OF SECTION

PART 1 - GENERAL

1.01 - SECTION INCLUDES

A. Site access and control of areas outside of site.

B. Contractor use of the premises.

C. Contractor storage, parking and deliveries.

D. Work hours, employee conduct and miscellaneous employee requirements.

E. Contract requirements related to maintaining Owner's current operations and excess inspection required.

F. Suggested construction sequence.

1.02 – SITE ACCESS AND CONTROL

A. Use the designated entrance to the site as shown on the drawings. If no site entrance is designated, the Contractor shall use an entrance designated by the Owner's Construction Representative.

1. The Owner may permit, solely at the Owner's discretion, the temporary use of another entrance for site access.

2. The Owner will only review requests made by the Contractor for an exception to the designated site entrance if made in writing at least 72 hours in advance of each of the times desired for use.

B. Maintain the entrance area clear of materials, vehicles and any other obstacle or debris. Failure to do so will result in a minimum back charge of $750 per occurrence.

C. The site is within a commercial business district. The Owner intends to be a good neighbor. The Contractor shall not close any road for any period in time other than that defined under their road work permits. Take whatever measures are necessary to not cause any inconvenience to the area's residents and business owners.

D. Employ methods to prevent construction materials and/or debris from leaving the site. The Contractor is responsible to routinely monitor the areas surrounding the site during the day as well as at the end of the work-day and to immediately clean up any area to its previous condition.

E. Employ methods to prevent the transmission of dirt from vehicles driving on exposed areas of the site from reaching the surrounding roadways. The Contractor will be responsible to immediately clean the roadway, should the measures taken by the Contractor not satisfactorily control the transmission of any dirt to the roadway.

F. Damages to areas outside the site, spills of soil, liquid, or any other material shall immediately be repaired, cleaned and restored to its previous condition.

G. Comply with all state and local requirements for allowable weight limits of vehicles on all roads.

H. The Owner reserves the right to back charge the Contractor for all costs associated with maintaining the grounds as well as maintaining areas outside the site, which may be disturbed by the Contractor should the Contractor fail to maintain or repair the aforementioned in a condition acceptable to the Owner.

1.03 - CONTRACTOR USE OF THE PREMISES

A. Premises, for the purpose of this Contract, shall mean the site, buildings and other structures located within the property line or in any temporary or permanent construction easements identified on the plans.

B. Use and manage the premises and the associated construction activities as follows:

1. To not hinder the adjacent business owner's ability to operate their facilities,

2. To allow for stockpiling of construction material and debris without any significant hardship, as defined by the Owner's Construction Representative, on the Owner,

3. To allow for the stockpiling of excavated soil and imported fill, when called for, without any significant hardship, as defined by the Owner's Construction Representative, on the Owner or other contractors,

4. To allow utility companies to install their work,

5. To allow for the delivery of equipment and materials by independent trucking companies by leaving enough space for backing in and out of areas,

6. To allow for the safe, unimpeded travel way of the Owners vehicles, Owner's Construction Representative's vehicles, Architect's and Engineer's vehicles, construction vehicles and heavy construction equipment about the entire site.

C. Maintain the premises in a safe condition throughout the construction period. Compliance with OSHA regulations and site safety shall be the responsibility of the Contractor as it relates to work of the Contract. The posting of all applicable OSHA safety signs shall be the responsibly of the Contractor.

D. Contractor shall be responsible for protecting property. All existing buildings, structures, shrubs, trees, lawn fixtures, sculptures and misc. equipment shall be protected at all times. Removals or relocation of said objects, if allowed shall be as directed by Owner's Construction Representative.

E. Protect all of the physical structures, property and improvements upon the site from damage by their Work and shall immediately repair or replace damage caused by construction operations, employees or equipment employed by the Contractor. All labor, materials and equipment and outside contractors that are employed by the Owner to repair damage caused by the Contractor shall be billed to the Contractor directly or withheld from money due the Contractor for work already completed.

F. Limit use of the site to the area(s) shown on the Contract Drawings. Confine operations to permit others working on the site easy access to all areas of Work.

G. Keep all existing operations areas, driveways, roads, and parking areas free and clear of materials and equipment. Do not unreasonably encumber the site with materials and equipment. Confine stockpiling of excess excavated material, materials and equipment to areas selected by

the Owner's construction representative. Locate storage sheds and trailers to areas designated in the plan or by the Owner's Construction Representative.

H. Immediately remove excess excavated material or relocate to areas on the site requiring placement of fill. Do not stockpile excess material on the site.

I. The construction site space is limited and it shall be the Contractor's responsibility to manage the site during the entire construction period with input from all concerned parties.

J. Due to the limited site area available for construction, staging areas shall be relocated several times during the various stages of construction. Additional compensation for relocating staging areas, equipment and material storage, and trailers are not to be considered an extra cost to the Contractor as this is an anticipated expense that shall be considered at the time of the bid.

K. The Contractor is responsible for cleaning up their own materials and debris. Failure to maintain a clean work site daily, will result in other performing the work and contractor(s) being back charged for the cleaning cost plus construction administration fees.

L. Use of the existing building facilities during construction is prohibited including but not limited to: toilet rooms, telephone and water fountains. Contractor(s) shall be fined $250 per occurrence if their employee (or subcontractor's employee) is observed disregarding these rules.

M. Should it become necessary to access the existing building during construction hours for measurements or other non-disruptive work, the contractor shall be escorted by an Owner's Construction Representative.

N. Do not discard or dispose of any waste on-site.

O. Open fires will not be permitted on the site.

P. Employ erosion control measures to protect wetlands located adjacent to the work where shown on the Drawings and as required by regulatory agencies.

Q. Install erosion control measures as indicated in the Contract. Confine storm water runoff to the site.

1.04 - CONTRACTOR STORAGE, PARKING AND DELIVERIES

A. Provide exterior storage containers when required. Final location of storage container shall be determined by the Owner.

B. Do not unreasonably encumber the premises with materials and equipment. Do not store material in existing buildings. Store all equipment and materials to allow the Owner's employees to operate and conduct their business safely.

C. Confine premise storage areas to locations designated by the Owner. Immediately repair or replace damaged facilities to the satisfaction of the Owner and to a condition that existed before the damage occurred as determined by preconstruction photographs, or if photographs are unavailable, to that deemed by the Owner.

D. No storage materials will be permitted within the buildings at any time during construction.

E. Storage of chemicals and painting shall be outside the existing or new structures and shall follow manufacturer's guidelines.

F. Properly store and secure compressed gas containers in accordance with OSHA and to the satisfaction of the Owner. Failure to do so will result in a $250 back charge, per occurrence.

G. Provide minimum of 48 hours advance written notice to the Owners Construction Representative for deliveries of materials, site visits by inspectors, manufacturers representatives or any other occasion that impacts the use of the site. Contractor shall be responsible for any costs that are incurred by the owner, for failure to meet previously agreed upon appointments or work schedules.

H. Deliveries sent to the Owner will not be signed for or unloaded by the Owner. They will be directed to the construction site and if no employee is on site, the delivery will be rejected, at the contractor's expense.

I. Night deliveries of equipment (past the designated quitting time) will not be permitted. Do not schedule trucking companies to deliver equipment or wait for the job site to open. Delivery trucks shall not obstruct the site entrance, shall not sit within the neighborhood causing an obstruction or perceived nuisance, nor be left idling on or off the site for any period of time.

J. Parking shall be in the designated areas of the site only. All automotive type vehicles are to be locked when parked or unattended to prevent unauthorized use. Do not leave vehicles or equipment unattended with the motor running or the ignition key in place. Any vehicles or trucks in non-designated areas may be towed at contractor's expense.

1.05 – WORK HOURS, EMPLOYEE CONDUCT AND MISCELLANEOUS EMPLOYEE REQUIREMENTS

A. The Contractor will be permitted to schedule working days and hours as specified in the General Terms and Conditions, if no times are specified therein then the work hours shall be Monday – Friday 8:00 am - 4:00 pm.

B. Employees are to act in a professional manner. Any employee using inappropriate language or who is disruptive to the work environment will be banned from the site.

C. Proper work attire is required. Shirts are to be worn at all times and no short pants are permitted.

D. Employees shall not converse with local residents or Owner’s employees.

E. Any employee found under the influence of any drug or alcohol will be banned from the site.

1.06 - CONTRACT REQUIREMENTS RELATED TO MAINTAINING OWNER’S CURRENT OPERATIONS AND EXCESS INSPECTION REQUIRED

A. Schedule working days and hours as specified. Pay all excess costs for inspection services provided by the Owner/Engineer/Architect for working beyond the times specified.

B. The hourly rate paid for inspection services beyond normal working hours shall be at a maximum billing rate of $180 per hour, which shall be used to compute the overtime hourly charge.

C. It is the Contractor’s responsibility to determine the dollar amount to be included in the bid to pay for the services of one (1) inspector to be present during the entire time work is being performed during low flow periods or beyond a normal 8-hour day. If the Owner elects to have more than one representative present, then the cost of the additional inspector(s) will not be paid for by the Contractor. The maximum hourly billing rate applies for all instances where excess engineering

and/or architectural services are performed beyond a normal 8-hour work day, not just work to be performed during low flow periods.

D. The Contractor will be allowed to work early morning hours if a planned tie-in must be performed. Early morning work is required since it is a low flow period. Provide 72 hours advanced notice to the Engineer/Architect for all early morning work together with a written plan as to the steps necessary to construct the work. The overtime salary costs for early morning tie-in work associated with having the operations staff of the treatment facility present shall be paid by the Contractor. This cost will be eligible for reimbursement payment as specified in Section 012100 – Allowances.

1.07 – SUGGESTED CONSTRUCTION SEQUENCE

A. The following is one suggested general, not all-inclusive, sequence of construction that may be used to complete all the work under the Contract within the time specified.

B. Work restrictions may be noted throughout the suggested sequence provided below. The Contractor shall comply with all noted work restrictions that appear.

C. The following suggested sequence is provided for information only:

1. Site utility mark-out.

2. Obtain approval of all new equipment (piping, valves, etc.) required to install the complete sewer extension. Obtain delivery dates for new equipment.

3. Layout the location of the new manholes and jacking pits.

4. Install sheeting for excavation work.

5. Install new manhole structures in excavated areas and backfill.

6. Install new force main and sewer.

7. Complete all remaining contract work.

PART 2 - PRODUCTS

Not Used

PART 3 - EXECUTION

Not Used

END OF SECTION

PART 1 - GENERAL

1.1 - SECTION INCLUDES

1. Site Utilization Plan requirements

1.2 – SITE UTILIZATION PLAN REQUIREMENTS

1. Prepare a Site Utilization Plan (SUP) showing staging areas, parking areas, stockpile areas, debris container areas, unloading areas, and trailer areas for review by the Owner's Construction Representative. The length and number of meetings necessary to develop and adopt a SUP shall be as required.

2. Meeting(s) will be held at the site with all concerned parties to assist the Contractor in developing the criteria for the plan. During these meeting(s), all parties will present their needs and requirements for site utilization. Representatives from the local municipality or utility companies may be attending. The requirements of the local municipality and utility companies shall be incorporated into the SUP.

3. The Contractor shall then prepare a draft site plan that attempts to incorporate the needs of all concerned parties. Another meeting will then be held at the site to review and present the plan. The plan shall then be revised at that meeting and adopted for use if it is acceptable to all relevant parties. If all parties cannot agree on an acceptable plan, then the Owner's Construction Representative will establish the Site Utilization Plan without any claims from any contractor.

4. The Contractor, by submitting a bid, understands the importance of a workable Site Utilization Plan and also understands that the Owner's Construction Representative may be required to select a plan to adopt that is not ideal to the planned construction activities anticipated before the bid was submitted. There shall be no claims for damages associated with site utilization.

5. If the Contractor fails to prepare the Site Utilization Plan as stipulated above, then the Owner reserves the right to back charge the General Contractor for the costs associated with having a Site Utilization Plan developed.

6. If the Contractor fails to participate or attend the meetings scheduled to develop the Site utilization Plan then the Contractor will forfeit any right to comment on the plan that is developed.

PART 2 - PRODUCTS

Not Used

PART 3 - EXECUTION

Not Used

END OF SECTION

PART 1 - GENERAL

1.01 - SECTION INCLUDES

A. Allowance pricing for the following items:

1. Independent Laboratory Testing Allowance.

B. This Section covers the requirements for use of the cash allowances listed above contained in the proposal (Bid Forms, Price Schedule) and included in the Contract Price bid by the Contractor and defines and stipulates the charges that will be paid for out of the stipulated allowances.

C. Include the cash allowances stipulated in this Section in the amount bid as noted on the Proposal.

D. Eligible costs described in this Section, and Sections referenced herein, will be the only costs paid for out of the stipulated allowances.

E. All other costs associated with the project as specified and/or shown, including but not limited to the delivery, installation and all Contractor overhead and/or collateral expenses shall be distributed among the other portions of the work and shall be included in the lump sum base bid.

1.02 - SUBMITTALS

A. Make all submissions under the provisions of Section 013300.

B. For each type of product/material specified to be furnished under allowance pricing provide documentation of the unit pricing on manufacturer's letterhead certifying pricing of the product/material.

C. Submit additional backup information to substantiate the invoiced amount(s) as the Engineer/Architect may require for review and approval, prior to order or payment of item.

D. Provide written breakdowns for extra work as the Owner may require.

1.03 - CHANGES TO STIPULATED (CASH) ALLOWANCE

A. If the actual cost of services differs from the cash allowance, then the Contract Price will be adjusted accordingly.

1.04 - PAYMENTS TO BE MADE OUT OF INDEPENDENT LABORATORY TESTING ALLOWANCE

A. Include the cash allowance of **$5,000.00 (FIVE THOUSAND DOLLARS AND ZERO CENTS)** in the amount bid for independent testing laboratory services specified in **Section 014500**.

B. The actual invoiced charges of the testing laboratory, including toning companies where called for, incurred for field and laboratory tests, as specified only in Section 014500 - Quality Control, shall be paid for out of the cash allowance.

1. Any other requirement specified herein throughout these specifications for providing the services of an independent testing laboratory, underground utility location company, or similar outside independent service are to be borne by the Contractor.

2. All costs for quality control services are to be included as part of the Contract Price (as-bid).

C. One (1) week prior to each partial payment, submit a certified invoice from each company listing and detailing the total costs incurred since the last invoice.

1. The invoice shall be on company letterhead signed by an authorized representative of the company and shall include man-hours, tests conducted, date of tests and associated costs and fees.

2. Payment for costs will not be made unless the information is provided and certified. Payment for costs will not be made unless the typed test data reports have been received by the Engineer.

3. In the case of pipe toning, flags must be set to delineate the route of underground pipes and utilities prior to submission of partial payment request.

D. If in the event test results (provided by the independent testing laboratory) show non-compliance with these specifications, then at the option of the Contractor and only with the approval of the Owner, he may re-test samples to verify the original test results at his/her own expense.

E. Costs for re-testing failed components of the work, when ordered by the Engineer/Architect, will not be paid for out of the cash allowance and will be directly borne by the Contractor.

PART 2 - PRODUCTS

Not Used

PART 3 - EXECUTION

Not Used

END OF SECTION

PART 1 – GENERAL

1.1 – SECTION INCLUDES

A. This Section includes the requirements for substitution of specified products during construction.

B. The Engineer/Architect will consider requests for substitutions only within thirty (30) days from the date of the Notice to Proceed.

C. Only products not specifically named in the bid are eligible for substitution in accordance with the requirements contained herein these specifications.

D. Products named by the Bidder, at the time of bid, shall be furnished and installed and substitutions will not be considered by the Owner/Engineer/Architect for those products named in the bid.

1.2 - CONTRACTOR'S OPTIONS

A. For products specified only by reference standard, select any product meeting that standard.

B. For products specified with the name of several products or manufacturers, select any one of the products or manufacturers named which complies with the Specifications.

C. Where products are not named, then submit products that meet the specifications.

PART 2 - PRODUCTS

2.01 - SUBSTITUTIONS

A. Name - The Drawings and Specifications list acceptable manufacturers, commercial names, trademarks, brands and other product, material and equipment designations. Such names are provided to establish the required type, quality and other salient requirements of procurement.

Equals - An item equal to that named or described on the Drawings or in the Specifications may be provided by Contractor if accepted by the Engineer/Architect.

A request for product substitution constitutes a representation that the Contractor:

1. Has investigated proposed Product and determined that it meets or exceeds the quality level of the specified Product.

2. Shall provide the same warranty for the Substitution as for the specified Product.

3. Shall coordinate installation and make changes to other Work that may be required for the Work to be complete with no additional cost to Owner.

4. Waives claims for additional costs or time extension that may subsequently become apparent.

5. Shall reimburse the Owner and the Engineer/Architect for review or redesign services associated with re-approval by authorities.

6. Shall reimburse the Owner for all additional engineering and/or architectural services claimed by the Engineer/Architect for extra services associated with the review of the Contractor's substituted item since it could not have been originally included in the Engineer/Architect's professional services agreement. Reimbursement shall be based on the man-hours expended, at current billing rates.

B. Substitutions will not be considered when they are indicated or implied on shop drawing or product data submittals, without separate written request, or when acceptance will require revision to the Contract Documents.

C. Substitution Submittal Procedure:

1. Submit three (3) copies of the Request for Substitution FORM for consideration including all required information.

2. Use the form included within this Section.

3. All forms shall be type written.

4. Submit shop drawings, product data, and certified test results attesting to the proposed product equivalence.

D. The burden to prove product equivalence rests on the Contractor.

E. The Engineer/Architect will notify Contractor in writing of decision to accept or reject request and at that time the Contractor can make a formal submittal in accordance with the requirements contained in Section 013300.

F. Substitutions may be considered when a product becomes unavailable through no fault of the Contractor.

PART 3 - EXECUTION

Not Used

This space left intentionally blank.

REQUEST FOR SUBSTITUTION FORM

Project: Substitution Request Number:

Contractor:

Address:

To: Date:

H2M Project Number: Owner:

Contract Name: Contract No.

Specification Title:

Section: Page: Article/Paragraph:

Drawing No(s):

Proposed Substitution:

Manufacturer: Address:

Trade Name: Phone #: ( )

Installer: Address:

Phone #:

History: ☐ New product ☐ 2-5 years old ☐ 5-10 years old ☐ More than 10 years old

Differences between proposed substitution and specified product:

☐ Point-by-point comparative data attached

Reason for not providing specified item (Attach separate sheet if necessary):

Typical Similar Installation:

Project:

Engineer/Architect:

Address:

Owner:

Date Installed:

Submit complete installation list on separate sheets.

Proposed substitution affects other parts of Work: ☐ No ☐ Yes

Explain:

Gross Savings to Owner for accepting substitution: $_____

Proposed substitution changes Contract Time: ☐ No ☐ Yes

Add / deduct (circle): _____days

Supporting data attached for evaluation of the proposed substitution:

☐ Product Data ☐ Photos ☐ Drawings ☐ Tests ☐ Reports ☐ Samples

☐ Other
(explain):_____

Attached data includes description, specifications, drawings, photographs, performance and test data adequate for evaluation of request; applicable portions of data are clearly identified.

Attached data also includes a description of changes to Contract Documents that proposed substitution will require for its proper installation.

The undersigned certifies that the following paragraphs, unless modified by attachments, are correct:

1. Proposed Substitution has been fully checked and coordinated with Contract Documents.
2. Proposed Substitution does not affect dimensions shown on Drawings.
3. The undersigned will pay for changes to building design, including Architectural and Engineering design, detailing, and construction costs caused by requested Substitution.
4. Proposed Substitution will have no adverse affect on the construction schedule, or specified warranty requirements.
5. Maintenance and service parts will be locally available for proposed substitution.
6. The undersigned further states that the function, appearance, and quality of proposed Substitution are equivalent or superior to specified item.

This request for product substitution also constitutes a representation that I, as the Contractor:

1. Has investigated proposed Product and determined that it meets or exceeds the quality level of the specified Product.

2. Shall provide the same warranty for the Substitution as for the specified Product.

3. Shall coordinate installation and make changes to other Work that may be required for the Work to be complete with no additional cost to Owner.

4. Waives claims for additional costs or time extension that may subsequently become apparent.

5. Shall reimburse the Owner and the Engineer/Architect for review or redesign services associated with re-approval by authorities.

6. Shall reimburse the Owner for all additional engineering/architectural services claimed by the Engineer/Architect for extra services associated with the review of the Contractor's substituted item since it could not have been originally included in the Engineer/Architect's professional services agreement. Reimbursement shall be based on the man-hours expended, at current billing rates.

Contractor's Authorized Representative
(Typewritten):

Authorized Signature:

Date:

END OF SECTION

PART 1 - GENERAL

1.1 SECTION INCLUDES

A. Schedule of Values

1.2 SCHEDULE OF VALUES

A. Submit for approval prior to the start of the work a Schedule of Values that indicates a breakdown of the labor, materials and equipment and other costs used in the preparation of the bid. This schedule shall be in sufficient detail to indicate separate figures for such items as excavation, concrete, equipment and all other items making up the lump sum price. The cost breakdown shall be separately itemized for each lump sum bid item in the project.

B. Where the cost breakdown includes items for bond payment, insurance payment, job set-up, or job mobilization, these items will be paid based on paid invoices and copies of cancelled checks.

C. Submit a Schedule of Values to the Engineer/Architect for review and approval within fifteen (15) calendar days from the date shown on the Notice to Proceed.

1.3 FORM OF SUBMITTAL

A. Submit typewritten Contract Cost Breakdown on AIA Form G703 - Application and Certificate for Payment Continuation Sheet or EJCDC 1910-8-E. The Engineer/Architect reserves the right to revise the form or provide a form prepared by the Engineer/Architect.

B. Use the Table of Contents of the Contract Specifications as a basis for format for listing costs of work for Sections under Divisions 01-48 as sections apply to work. Not all Sections need be assigned a breakout price as determined by the Engineer/Architect.

C. Identify each line item with number and title as listed in Table of Contents.

D. Provide dollar values for each line item for labor, overhead, profit, material, and equipment components for each category of work if requested by the Engineer/Architect.

E. List quantities of materials specified under unit price allowances.

F. The Schedule of Values, after approval by the Engineer/Architect, shall be the basis for the Contractor's Application for Payment.

G. The first Application for Payment will not be reviewed prior to an approved breakdown.

1.4 PREPARATION OF SCHEDULE OF VALUES

A. In addition to the above, provide a separate line item cost for each of the following items which shall be supported by proof where specified below:

1. Mobilization and Demobilization (Amounts shall be equal in value).

2. Rubbish removal and daily cleaning up. (Provide a total dollar amount and a daily rate for each calendar day during the contract period.)

3. Performance and payment bonds. (Submit proof of this amount.)

4. Insurance. (Submit proof of this amount.)

5. Temporary facilities and measures as specified in Section 015000.

6. Preparation of the Project Construction Schedule, and updates, as specified in Section 013300.

7. Preparation of Weekly Schedules as specified in Section 013100

8. Construction photographs as specified in Section 013233. (Submit proof of this amount.)

9. All Cash Allowance items as contained in Section 012100.

10. Exploratory digging as specified in Section 023000.

11. Underground utility mapping services as specified in Section 023000.

12. Surveyor used for layout. (Submit proof of this amount.)

13. Record Drawing retainage amount specified in Section 017839.

14. Final cleaning.

B. Show total costs including overhead and profit.

C. Provide additional details and data to substantiate the cost breakdown as requested by the Engineer/Architect.

PART 2 - PRODUCTS

Not Used

PART 3 – EXECUTION

Not Used

END OF SECTION

PART 1 - GENERAL

1.1 - SECTION INCLUDES

A. Requests for Interpretation or for information

B. Administration of subcontracts

C. Coordination of work with utility companies, Owner and the Engineer/Architect

D. Communication and coordination requirements

E. Site staffing requirements for the Contractor's superintendent are also specified herein, the costs for which shall be included in the Contract price.

1.2 - REQUEST FOR INTERPRETATION OR INFORMATION

A. Use the Request for Interpretation/Information Form included within this Section when the Contractor believes that additional information is needed to perform the work of the Contract.

B. The Engineer/Architect may not respond to any requests unless the form is used.

C. The Engineer/Architect's verbal response(s) to the Contractor's formal requests, if provided, shall not constitute an official response and if acted upon by the Contractor are done so at the Contractor's own risk and liability and shall not be subject to claims for additional compensation.

D. A signed facsimile or emailed .pdf of the form will be accepted. The original of the form must be signed and provided to the Engineer/Architect's project manager.

E. The Engineer/Architect will respond in writing to the request as soon as possible.

1.3 - SUBCONTRACTOR ADMINISTRATION AND COORDINATION

A. Terms and conditions of the Contract shall be binding upon each subcontractor.

B. Furnish each subcontractor and major equipment vendor at least one (1) copy of the Plans and Technical Specifications.

C. Provide at least one (1) copy of each approved shop drawing to each subcontractor whose work may depend upon the contents of the shop drawing submittal. The Owner reserves the right to stop all work, without claims for delay, until such time as appropriate subcontractors are furnished with appropriate shop drawings.

D. Sequence and schedule the work of subcontractors. Coordinate construction and administration activities of subcontractors. The Engineer/Architect and Owner will not accept telephone calls, facsimiles or office visits from any subcontractors on the project. Subcontractor and vendor questions and clarifications shall be directed to the Engineer/Architect by the Contractor.

E. The Contractor's on-site project superintendent shall inspect all the work of all of his/her subcontractors, as it is being constructed. The Contractor's subcontractor shall not be permitted to do any work on the site without the Contractor's job site superintendent also being there to inspect the work as it is being performed.

1.4 - UTILITY COORDINATION

A. Comply with the requirements of 16 NYCRR Part 753 – Protection of Underground Facilities. Submit a letter stating the case number.

B. Comply with the utility coordination requirements contained in the General Conditions.

1.5 - PUBLIC/PRIVATE UTILITIES

A. Notify all public and private utilities in accordance with Article 20, Section 322-a of the New York State General Business Law for location and markout of existing utilities in the vicinity of the work.

B. Repair all utilities damaged during the Work to the standards and approval of the respective utility at no cost to the Owner.

1.6 - SPECIFIC COORDINATION REQUIREMENTS

A. Sequence and schedule work so as not to interfere with the work by others. Coordinate the work of this Contract with the work by others. In case of conflicts due to improper coordination by the Contractor, the Owner/Engineer/Architect's resolution will be final. No compensation will be awarded for extra work required to resolve conflicts.

B. Coordinate space requirements, supports, and installation of mechanical, electrical and plumbing work which may be indicated diagrammatically on the Drawings. Follow routing shown for pipes, ducts, and conduit as closely as practicable. Place runs parallel with building lines. Utilize spaces efficiently to maximize accessibility for other installations, maintenance, and to facilitate repairs.

C. In finished areas, except as otherwise indicated, conceal pipes, ducts, and wiring within the construction. Coordinate locations of all fixtures and outlets with finish elements and work by all other trades.

D. Coordinate the work by complying with the following:

1. Construction Schedule: Provide a construction schedule as specified in Section 013216 - Construction Schedules.

2. Weekly Schedule: By 3:00 PM of each Friday during the construction period, fax or email a typed memo addressed to the Engineer/Architect's/Owner's resident field engineer/inspector and designated office project manager summarizing the work for the following week. The memo shall also be faxed or emailed to the Owner. The memo shall briefly itemize the planned activities for the coming week. The memo shall also include a summary of expected material/equipment deliveries, concrete pours, utility tie-ins, excavated material removals and other heavy construction traffic that may impact the work activities for the coming week.

3. Email Account: Maintain an email account that shall be used to improve communication. An email shall not constitute a formal advisement regarding the terms and conditions of the contract. Email shall only be considered an informal way of notifying relevant parties of project related activities.

4. Email List: Within five (5) calendar days from the Notice To Proceed, provide a list of email addresses for each major equipment supplier and local representative, if such exists. A contact person shall be provided for each email address.

5. Work Plan: Within five (5) calendar days from the date of the Notice to Proceed, submit to the Engineer/Architect a type written work plan in bullet format of the sequence of construction activities from start to finish of construction. A facsimile will not be accepted. All work plans shall include a description of the different major phases of construction as pertaining to the individual construction contract. As a minimum the work plan shall include the tasks and subtasks specified in Section 013216 for the project schedule.

6. Equipment and Startup Schedule: Submit a preliminary equipment delivery schedule and a preliminary startup schedule for all equipment and systems being furnished under the Contract. This schedule shall be submitted within 30 calendar days from the date of the Notice To Proceed.

   a. Include an early and late date for each item.

   b. Indicate the time necessary to physically install and ready each item.

   c. The Engineer/Architect may waive this schedule if the Contractor has adequately shown the information on the construction schedule, in the opinion of the Engineer/Architect.

E. Project Coordination Meetings: Participate in and attend the Project Coordination Meetings as specified below:

1. Up to two (2) project coordination meetings will be held at the Engineer/Architect's or Owner's office as specified herein and in Section 013216.

2. The meetings will be held when so called for by the Engineer/Architect.

3. Each meeting may last up to eight (8) hours with one hour for lunch.

4. The time associated with attendance at the meetings shall be included in the lump sum bid and be subject to a credit of $150 per hour for each unused hour that the Contractor does not attend.

1.7 - CONTRACTOR'S JOB SITE SUPERINTENDENT

A. Employ an on-site superintendent as specified herein below. He/She shall be a full-time employee of the Contractor.

B. Name the job site superintendent within five (5) days of the Notice to Proceed. A letter to the Engineer/Architect shall be provided that names the superintendent.

C. The superintendent shall have the authority to sequence and schedule the work, and to staff the project, so as not to interfere with the work by others and to complete the work daily within the time so required.

D. Each superintendent shall have a minimum of five (5) years of experience as a job site superintendent for projects of equal size and complexity.

E. The superintendent shall not be a foreman or crew supervisor and shall be qualified and experienced person who shall act to schedule and sequence the work on a daily basis.

F. The superintendent shall be qualified to perform the duties so required to successfully complete the work in accordance with the Contract Documents.

G. The superintendent shall be on the site for each work day, full time, starting within twenty one (21) calendar days from the date of the Notice to Proceed through the date of Final Completion, including all punch list items.

H. The superintendent shall speak English. If required by the Engineer/Architect, provide a resume for the proposed superintendent that shall be typed and shall list the qualifications of the superintendent. Prior to the Contractor assigning a superintendent to the project, he may wish to arrange an interview with the Engineer/Architect to determine the proposed superintendent's ability to properly coordinate the work through the Owner/Engineer/Architect. The Contractor shall employ a superintendent acceptable to the Owner.

This space left intentionally blank.

REQUEST FOR INTERPRETATION/INFORMATION (RFI)

TOWN OF RIVERHEAD / RIVERHEAD SEWER DISTRICT

841 OLD COUNTY ROAD SEWER MAIN & EASEMENT RELOCATION

CONSTRUCTION CONTRACT NO. RDSD 18-01

Product, Item, or System:			
Request Date:		**RFI No.:**	
Specification Section:		**Paragraph Reference:**	
Contract Drawing Reference(s):			
Describe Request:			
Signed:	☐ See Contractor's Attachments for Additional Description for Information		
Owner/Engineer/Architect Response:			
Engineer/Architect (Printed):	☐ See Engineer/Architect's Attachments for Additional Information		
Engineer/Architect's Signature & Date		*Response Accepted By Contractor* *Contractor's Signature & Date*	

The Work shall be carried out in accordance with these supplemental instructions without change in Contract amount or Contract time for completion. Prior to proceeding with these instructions, indicate your acceptance of these instructions by signing where indicated and returning this form to the Engineer/Architect.

PART 2 - PRODUCTS

Not Used

PART 3 - EXECUTION

Not Used

END OF SECTION

PART 1 - GENERAL

1.1 SECTION INCLUDES

A. Project record documents shall be prepared as specified herein.

1.2 QUALITY ASSURANCE

1. Employ a land surveyor licensed in the State where the project is located. The surveyor shall be acceptable to the Engineer/Architect in terms of experience and qualifications.

2. Submit evidence of the surveyor's errors and omissions (professional liability) insurance coverage in the form of an insurance certificate.

3. The surveyor shall maintain a minimum coverage of $1,000,000 for professional liability.

4. The Owner, Engineer/Architect, and Contractor shall be named as insurance certificate holders.

5. A thirty-day cancellation notice shall be provided.

6. Physical work shall not be performed until the certificate is provided and approved by the Owner.

B. All instruments used on the project shall be of professional quality and in first class condition.

1. All instruments shall have been calibrated by a manufacturer’s service station within the last month from the date of first use on the job site.

2. Submit certificate of calibration or paid invoice showing that the unit has been calibrated, if so required by the Engineer/Architect.

1.3 SUBMITTALS FOR REVIEW

A. Submit name, address, and telephone number of Surveyor before starting survey work.

B. Surveyor’s professional liability insurance certificate.

C. On request, submit documentation verifying accuracy of survey work.

D. Submit a copy of the site drawing signed by the land surveyor showing locations of other benchmarks set by the surveyor, baseline location and offset hubs. If requested, the Engineer/Architect will provide a reproducible drawing or a drawing in digital format for use by the surveyor.

1.4 EXAMINATION

A. Verify locations of survey control points prior to starting work.

B. Promptly notify Engineer/Architect of any discrepancies discovered.

1.5 SURVEY REFERENCE POINTS

A. The Contractor's surveyor shall locate and protect survey control and reference points located throughout the project site.

B. Control datum for survey is that indicated on the Drawings or will be provided by the Engineer/Architect.

C. Protect survey control points prior to starting any site work. Preserve permanent reference points during construction.

D. Promptly report to the Engineer/Architect the loss or destruction of any reference point or relocation required because of changes in grades or other reasons.

E. The surveyor shall replace dislocated survey control points based on original survey control when directed by the Engineer/Architect.

F. Make no changes without prior written notice to Engineer/Architect.

G. The surveyor shall set control lath for rough and final grading purposes. Lath shall be placed at sufficient intervals to control grade or as directed by the Engineer/Architect.

H. All new structures, pits, chambers, drainage pools, curbs, roads, swales, and other physical elements shall be located by survey control.

I. Underground pipelines need not be located using survey control but shall be located using standard survey equipment operated by persons experienced in their operation.

1.6 SURVEY REQUIREMENTS

A. The Engineer/Architect will provide one (1) benchmark.

B. The Contractor shall, with his own forces, obtain working or construction lines or grades as needed subject to the check of the surveyor. The surveyor shall set offsets.

C. Establish elevations, lines, offsets and levels. Locate and lay out by instrumentation and similar appropriate means:

1. Site improvements including pavements, stakes for grading, curbs, fill and topsoil placement, utility locations, slopes and invert elevations.

2. Grid or axis for structures.

3. Building foundation, column locations, ground floor elevations, and equipment foundations.

D. Provide tie distances on record drawings to all underground structures, valves, pipes, and utilities installed as work of this Contract.

E. Accuracy of subsurface utility data shall be produced to ASCE 38-02 Quality Level A.

PART 2 - PRODUCTS

Not Used

PART 3 - EXECUTION

Not Used

END OF SECTION

PART 1 - GENERAL

1.1 SECTION INCLUDES

A. Pre and post-construction photography.

1.2 PHOTOGRAPHY

A. Provide color photographs of the site (pre and post-construction) produced by a professional photographer acceptable to the Engineer/Architect who is regularly engaged. Photographs taken by the Contractor will not be accepted.

B. Preconstruction Photographs: Provide photographs, taken within the limits of the work, to document existing conditions. Engineer/Architect will designate the date and location of the exposures that will generally be taken just prior to the construction operations. The minimum number of photographs required shall be twenty-four (24). Two (2) duplicate sets shall be provided.

C. Progress Photographs: The Engineer/Architect will take progress photographs for the Owner's record. The Contractor shall secure his/her own progress photographs.

D. Final Photographs: Provide post-construction photographs, taken within the limits of the work, to document the final project and the conditions at final payment and issuance of the Final Certificate. The Final Payment will not be processed until such time as the photographs are provided. Engineer/Architect will designate the date and location of the exposures that will be taken. The minimum number of photographs required shall be twenty-four (24). Two (2) duplicate sets shall be provided.

E. Annotate the following on the back side of each print:

1. Project name and number.

2. Photographer's identification, address, and telephone number.

3. Date and time picture was taken.

4. Location of picture relative to a specific location on the site, (for example, "10 ft. southeast of Operations Building").

5. Direction in which camera was aimed.

1.3 PRINTS

A. Paper Surface (Color): Smooth, glossy.

B. Contrast (Color): High.

C. Size for printed photographs: 4-inch x 6-inch.

D. Commercially purchased album pages suitable for a 3-ring binder shall protect the prints. Deliver to the Engineer/Architect prints placed in the protector page. One (1) print per slot. Do not cover the annotations on the backside of the photograph.

E. Panoramic photographs shall be taken at appropriate locations.

F. Bind each set of photographs in a large capacity binder with plastic cover front and back as manufactured by National or equal. Each binder shall be sequentially numbered and show the name of the project on the binder and front cover using white on black ½ inch laminated lettering tape by Brother or equal. Provide an index with each set of photographs in a form acceptable to the Owner.

1.4 ELECTRONIC MEDIA

A. Deliver electronic media with jpeg files and index thumbnail sheet to Engineer/Architect with prints. Provide typed table of contents for each set of prints for each submission.

1.5 TECHNIQUE

A. Provide factual presentation. Provide correct exposure and focus, high resolution and sharpness, maximum depth of field, and minimum distortion.

1.6 SUBMITTALS

A. Deliver prints within seven (7) working days after exposure with transmittal letter in accordance with the requirements of Section 013300.

PART 2 - PRODUCTS

Not Used

PART 3 - EXECUTION

Not Used

END OF SECTION

PART 1 - GENERAL

1.1 - SECTION INCLUDES

A. Requirements for making submissions for the project. Electronic submissions will be required unless expressly noted otherwise.

1.2 - IDENTIFICATION OF SUBMITTALS

A. Each submission by the Contractor shall be accompanied by a SUBMISSION TRANSMITTAL FORM. The Contractor shall use the specimen form made a part of this Section. Submittals not containing the form will be returned to the Contractor un-reviewed. The Engineer/Architect will not review project submissions until such time as the form is competed in its entirety. Identify each submittal and resubmittal using the form.

B. Each individual submittal shall be identified with a 'submission log number' as specified here in this example: 033000.01-1

1. The Section number for which the submittal applies, followed by a period, shall be indicated, "033000.".

2. The submittal within the Section shall be indicated by the next grouping "01". For instance and in this example, the concrete design mix may be submission "01", the waterstop catalog cut may be "02", and so on. Submittals shall be sequentially numbered within the Specification Section, i.e. 01, 02, etc.

3. The number of times the submission was made shall be preceded by a dash and a numerical suffix as follows: "-1". In this example, the concrete design mix is being submitted for the first time. Use the number "1" for the first time it is being submitted.

4. Subsequent submissions of the concrete design mix shall utilize the original number and a sequential numeric suffix, i.e. "2" for a resubmission, "3" for the second resubmission, and so on. Substitute the new number for the original "1".

C. Where a layout drawing, containing different elements of the project, is being submitted and there is a question as to what the log number might be, then the Contractor shall contact the Engineer/Architect so that an agreed upon log number can be assigned.

D. It is incumbent on the Contractor to initially assign the submission log number designation to each submission. Submissions not containing a log number, as specified above, will be returned to the Contractor un-reviewed by the Engineer/Architect.

E. Each submittal shall also be accompanied by a Transmittal Letter (or "Speed Form") addressed to the Engineer/Architect's Project Manager as hereinafter defined.

1.3 - COORDINATION OF SUBMITTALS

A. Prior to submitting to the Engineer/Architect, fully coordinate all interrelated work. As a minimum, do the following:

1. Determine and verify all field dimensions and conditions by field measuring existing conditions and the installed work of this Contract and work by others.

2. Coordinate with all trades, subcontractors, vendors, system and equipment suppliers and manufacturers, public agencies, and utility companies and secure all necessary approvals, in writing.

B. Make submittals in groups containing all associated items that in some way depend upon each other.

1. This also applies to color charts, as one color may not be able to be selected without the selection of other colors so as to form a color-coordinated group.

2. The Engineer/Architect may elect not to review partial or incomplete submissions, whereupon he will notify the Contractor of the additional submissions that are required before a review can be made.

1.4 - TIMING OF SUBMITTALS

A. Make submittals far enough in advance of scheduled dates of installation to provide time for reviews, for securing necessary approvals, for possible revisions and re-submittals, and for placing orders and securing delivery. The Engineer/Architect will review submittals in a manner as expedient as possible, and will generally send a written response to the Contractor within seven (7) calendar days of receipt of submittals.

B. Submissions may be returned reviewed, unreviewed, rejected, returned conditioned upon submission of related items, or for other reasons set forth in the Contract Documents.

C. Make submissions well in advance as the returning, rejecting or disapproval of submissions or other similar circumstances are possible and are deemed “avoidable delays”. Costs for these delays or those attributed to Contractor’s tardiness in making submittals shall be borne by the Contractor.

D. All submittals requiring Engineer/Architect’s review as required under the technical specifications of these documents shall be submitted within thirty (30) consecutive calendar days after the date of the Notice to Proceed. An amount of $250 per calendar day shall be deducted from payment due the Contractor for each day that an outstanding submittal exists, said amount being the cost associated with the Engineer/Architect’s review.

E. If material or equipment is installed before it has been deemed to be in general compliance with the Contract Documents, as determined by the Engineer/Architect, the Contractor shall be liable for its removal and replacement at no extra charge and without an increase in contract time.

1.5 - DESTINATION OF SUBMITTALS

A. Each submission of documents shall be accompanied by a transmittal form containing the name of the project, the contract name, the Engineer/Architect’s project manager, a submittal ID number, and a description of content for the submitted items.

B. A copy of the TRANSMITTAL FORM shall also be provided to the Engineer/Architect’s resident engineer/inspector at the job site.

C. Electronic submittals shall be transmitted through the Newforma® Project Center website or by email, pending instruction by the Engineer. H2M architects + engineers is using a project information application called Newforma® Project Center. One of its components is Newforma Info Exchange, a web application that facilitates sending and sharing transmittals, and file sharing.

D. As an external team member on this project the Contractor will be required to access the H2M architects + engineers/Newforma Info Exchange website for information related to the project, including file transfers, RFI, Submittals, Action Items, and project Calendar information. You will have access to this website using any internet-capable computer running Internet Explorer or Firefox. All data transmitted through the H2M architects + engineers/Newforma Info Exchange website is encrypted and logged. Further instructions will be provided to the Contractor after the contract is awarded.

E. Other submissions, such as material samples or other items as instructed by the Engineer, shall be sent to the Engineer/Architect's office as follows:

H2M architects + engineers
538 Broad Hollow Road, 4th Floor East
Melville, New York 11747
Attention: H2M Project Manager (Named at Pre-Construction Conference or in the Notice to Proceed)

1.6 - CLARITY OF SUBMITTALS

A. All printed materials shall be neat, clean, professionally drafted by hand or by computer, clear, legible, and of such quality that they can be easily reproduced by normal photocopying or blueprinting machines.

B. All electronic submittals shall be produced with a minimum resolution of 300 dpi.

C. Binders of information shall be separated into groups, subsystems, or similar equipment/function. Copies not conforming to this paragraph will be returned to the Contractor without the Engineer/Architect's review.

1.7 - CONTRACTOR'S REPRESENTATION

A. By making a submission, the Contractor represents that he has determined and verified all field measurements and dimensions, field construction criteria, site and building constraints in terms of limitations in moving equipment into an enclosed space, materials, catalog and model numbers and similar data and that he has checked and coordinated each submission with other work at or adjacent to the project site in accordance with the requirements contained in Section 013100 - Project Management and Coordination and the Contract Documents.

B. Each SUBMISSION TRANSMITTAL FORM shall contain the Contractor's approval stamp and date showing that the submittal has been approved by the Contractor. The Engineer/Architect will not review submittals that have not yet been reviewed and approved by the Contractor.

1.8 - ENGINEER/ARCHITECT'S REVIEW

A. Engineer/Architect will review and comment on each submission conforming to the requirements of this Section.

1. Engineer/Architect's review will be for conformance with the design concept of the project and will be confined to general arrangement and compliance with the Contract Documents only, and will not be for the purpose of checking dimensions, weights, clearances, fittings, laying lengths, tolerances, interference's, for coordinating the work by others or subcontractors.

2. The Engineer/Architect's review of a separate item, or portion of a system, does not represent a review of an assembly or system in which the item functions.

B. The Engineer/Architect will mark submittals as follows:

1. NO EXCEPTION TAKEN ***(A)*** - No corrections, no marks. The content of this submittal has been reviewed by the Engineer/Architect and been found to be in general compliance with the Contract Documents. No further submission of this submittal is required and the information contained in the submittal may be built into the work in accordance with the Contract Documents.

2. MAKE CORRECTIONS NOTED ***(B)*** - Minor amount of corrections. The content of this submittal has been reviewed by the Engineer/Architect and has been found in general to be in compliance with the Contract Documents. The notations made on the submittal by the Engineer/Architect shall be incorporated into the work in accordance with the terms and conditions of the Contract Documents. No further submission of this submittal is required.

3. AMEND AND RESUBMIT ***(C)*** - The content of this submittal has been reviewed by the Engineer/Architect and this review has determined that additional data and/or modification to the submitted data or other changes are required to bring the work represented in this submittal into compliance with the Contract Documents. This submittal shall be reviewed and revised in accordance with the Engineer/Architect's comments and resubmitted to the Engineer/Architect for review. The information contained on the resubmittal shall not be incorporated into the work until the submittal is returned to the Contractor marked "NO EXCEPTION TAKEN" or "MAKE CORRECTIONS NOTED".

4. REJECTED ***(D)*** - The content of this submittal has been reviewed by the Engineer/Architect and has been determined not to be in accordance with the requirements contained in the Contract Document and requires too many corrections or other justifiable reason. The submittal shall be corrected and resubmitted or a submittal of an alternate shall be provided. No items are to be fabricated under this mark.

5. SUBMIT SPECIFIED ITEM ***(E)***- The content of this submittal has been reviewed by the Engineer/Architect and this review has indicated that the work displayed in the submittal is not in compliance with the Contract Documents. The Contractor shall submit another submittal for this portion of the work, which complies with the Contract Documents.

6. RECEIVED ***(R)*** - This submittal is accepted on the project and filed for record purposes only, in accordance with the terms and conditions of the Contract Documents. Documents marked "RECEIVED" will not be returned.

C. No payment will be made on any item for which a submission is required if such submission:

1. has not been made,

2. has been made but was not stamped "No Exceptions Taken" by Engineer/Architect,

3. has been made and stamped "Make Corrections Noted", but contractor has not complied with Engineer/Architect's notes marked on the submittal,

4. has been made and stamped "No Exceptions Taken", but item provided does not conform to the shop drawing nor to the Contract Documents.

D. Submittals not required by these specifications will not be recognized or processed.

E. Provide an 8-inch by 10-inch space for the Engineer/Architect's review stamp.

1.9 - RESUBMISSIONS

A. Prepare new and additional submissions, make required corrections, and resubmit corrected copies until found in compliance with the Contract Documents.

B. On, or with, re-submittals, clearly describe revisions and changes made, other than the corrections requested by Engineer/Architect, which did not appear on the previous submissions.

1.10 - CONTRACTOR'S RESPONSIBILITIES

A. Engineer/Architect's review of submittals shall not relieve the Contractor of his/her responsibility for any deviation from the requirements of the Contract Documents nor relieve the Contractor from responsibility for errors or omissions in the submittals.

B. No portion of the work requiring a submission shall be commenced until the Engineer/Architect has found the submission in general compliance with the Contract Documents.

C. The Contractor shall provide written notification of any specification or drawing deviation.

1.11 - EXCESS COSTS FOR ENGINEERING/ARCHITECTURAL SERVICES

A. The Owner will charge to the Contractor, and will deduct from the partial and final payments due the Contractor, all excess engineering and architectural expenses incurred by the Owner for extra services (work) conducted or undertaken by the Engineer/Architect as stipulated below:

1. Services and other similar charges because of the Contractor's errors, omissions, or failures to conform to the requirements of the Contract Documents as related to administrative charges associated with non-compliance with the requirements for making project submissions.

2. Services and other similar charges required to examine and evaluate any changes or alternates proposed by the Contractor and which may vary from the Contract Documents.

3. Services and other similar charges as a result of the Contractor's proposed substitution of materials, equipment or products which require a redesign of any portion of the project, as contained in the Contract Documents at the time of bid.

4. Services and other similar charges as a result of the Contractor's proposed substitution of products which require an engineering and/or architectural evaluation, beyond the time stipulated in Section 012500, to determine if the substituted product is equal to that specified.

5. Services and other similar charges as a result of changes by the Contractor to dimensions, weights, sizes, voltages, phase, horsepower, materials of construction, and similar physical or operating characteristics of the product furnished which require redesign of the project in any way.

6. Services and other similar charges for the review of resubmissions of shop drawings that have been marked as "No Exceptions Taken" or "Make Corrections Noted".

7. Services and other similar charges for the review of shop drawings submitted more than two (2) times for the same product or portion of the work.

1.12 - MISCELLANEOUS SUBMITTALS

A. Provide a Submittal Schedule within seven (7) calendar days from the date of the Notice to Proceed. The Submittal Schedule shall list all submittals for the project referenced by draft log number. Provide the estimated date that the submittal will be transmitted to the Engineer/Architect for review.

B. Within seven (7) calendar days from the date of the Pre-Construction Meeting, submit a Proposed Products List. This list shall be a complete listing of all products proposed for use, with name of manufacturer, service headquarters, trade name and model number of each product. Partial listings will not be accepted.

C. For products specified only by reference standards, give manufacturer, trade name, model or catalog designation, and reference standards.

1.13 - SUBCONTRACTOR LIST

A. Submit, on AIA Form G705, within THIRTY (30) calendar days after the date of the Notice to Proceed, a list of all subcontractors, including the names of the major subcontractors that were submitted at the time of the bid.

1.14 - SAFETY DATA SHEETS (SDS)

A. Comply with “Right to Know” requirements of Chapter 551 of Laws of New York, 1980, concerning notification of the use of toxic substances.

B. Any product or substance used by the Contractor or its subcontractors which is listed in Subpart Z of OSHA Part 1910 Title 29 of the Code of Federal Regulations entitled “Toxic and Hazardous Substances” shall be identified to the Owner/Engineer/Architect by the Contractor’s submission of a standard Safety Data Sheet (SDS) in accordance with “Right to Know” requirements.

C. Products will not be permitted to be kept on site without a SDS.

1.15 - SHOP DRAWINGS

A. Submit shop drawings for all fabricated work, for all manufactured items and for items specifically required by the specifications.

B. Submit each shop and layout drawing to Engineer/Architect in the form of one (1) quality reproducible transparency and two (2) prints.

1. After the submittal has been reviewed by the Engineer/Architect, the transparency will be annotated, prints will be made for Engineer/Architect’s and Owner’s use, records, and distribution.

2. Engineer/Architect will return the transparency to the Contractor.

3. Send one print to the Owner as specified above.

C. Submit one (1) electronic copy of each standard drawing, catalog cut, or other material. All shop drawings or submittals that are not in the standard 8-1/2" x 11" format shall be submitted both electronically and in paper. Samples shall be delivered directly to the office of the Engineer/Architect. The Engineer/Architect will return an electronic copy of each submittal once reviewed.

D. Subcontractors shall submit shop drawings directly to the Contractor for checking. Thoroughly check subcontractors' shop drawings for measurements, sizes of members, details, materials, and conformance with the Contract Documents.

1. Return submittals which are found to be inaccurate or in error.

2. Do not submit to the Engineer/Architect until all corrections have been made.

E. Clearly show the relationship of the various parts of the project and where the information provided on the submission depends upon field measurements and existing conditions.

F. Make all measurements, confirm existing conditions, and include them on the shop drawings before making a submission to the Engineer/Architect.

G. Submissions for a single item, or group of related items shall be complete.

H. When submitting manufacturers' catalogs, pamphlets or other data sheets, in lieu of prepared shop drawings, clearly mark the items being submitted for review.

I. If the shop drawings contain any departures from the contract requirements, specifically describe them in the letter of transmittal.

1. Where such departures require revisions to layouts, structural, architectural, electrical, HVAC or any other changes to the work as shown, Contractor shall, at his own expense, prepare and submit revised drawings accordingly.

2. Make drawings the same size as the Contract Drawings and to the same scale.

1.16 - SAMPLES

A. Where required, or where requested by the Engineer/Architect, submit sample or test specimens of materials to be used or offered for use.

1. Samples shall be representative, in all respects, of the material offered or intended, shall be supplied in such quantities and sizes as may be required for proper examination and tests, and shall be delivered to Engineer/Architect, prepaid, along with identification as to their sources and types of grades.

2. Submit samples well in advance of anticipated use to permit the making of tests or examinations.

B. Samples will be checked for conformance with the design and for compliance with the Contract Documents.

C. Work shall be in accordance with the approved sample. The use of materials or equipment for which samples are requested or required to be submitted is not permitted until such time that the Engineer/Architect has completed his review.

1.17 - MANUFACTURER'S INSTRUCTIONS

A. When specified in individual specification sections, submit printed instructions for delivery, storage, assembly, installation, start-up, adjusting, and finishing, to Engineer/Architect.

B. Indicate special procedures, perimeter conditions requiring special attention, and special environmental criteria required for application or installation. Provide manufacturer's instructions with shop drawings.

1.18 - CERTIFICATIONS

A. Submit certifications of compliance indicated in the Contract Documents.

B. Certifications shall be complete and exact, they shall be properly authenticated by the written signature, in ink, of an owner, officer or duly authorized representative of the person, firm or organization issuing such certification and they shall guarantee that the materials or equipment are in complete conformance with the requirements of these specifications.

1.19 - COLORS AND PATTERNS

A. Unless the precise color and pattern are specified, whenever a choice of color or pattern is available in a specified product, submit accurate color and pattern charts for Engineer/Architect's and Owner's review and selection.

1.20 - MANUFACTURER'S SERVICE CENTER

A. The product of a manufacturer who does not maintain an adequate nearby service center and a sufficient stock of spare parts are subject to rejection by Engineer/Architect solely on that basis.

B. With each submission, submit information on manufacturer's facilities and give complete details of his service policies and capabilities, and a general idea of the stock of spare parts available. Submit this information in the form of a certification. Also include names, addresses and telephone numbers of at least three of the service center's present customers who are in the area of the project.

1.21 - TEST RESULTS AND INSTALLATION

A. Whenever field startup services are specified, the Contractor shall obtain from the manufacturer and submit to the Engineer/Architect Manufacturer Startup Reports (MSR's). The report shall detail the results of the field visit and all special conditions resulting from the startup.

B. Whenever field or factory tests are required on materials, equipment and systems, such tests shall be performed and the test results submitted to Engineer/Architect in the form of a MSR.

C. Do not deliver to the project or incorporate into the work any materials or equipment for which Engineer/Architect has not completed his review and found same to be in general conformance with the Contract Documents.

D. Submit MSR's within thirty (30) calendar days after the date of the startup or factory test.

1.22 - SPARE PARTS LIST

A. Prepare a list of all spare parts specified to be provided in other Sections. Compile the total list for the purposes of reviewing actual spare parts delivered versus spare parts specified to be provided. The list shall reference the Section, model number, and quantity to be provided.

1.23 - WAIVER OF CERTAIN SUBMITTAL REQUIREMENTS

A. Unless otherwise specified, the requirement to submit data and samples for products specified for approval will be waived for products specified by brand name if the specifically named products are furnished for the work. In such cases, the Contractor shall submit two (2) copies of required Product Data directly to the Engineer/Architect's field representative for information and verification during its incorporation into the work. The SUBMISSION TRANSMITTAL FORM shall always be used.

PART 2 - PRODUCTS

Not Used

PART 3 - EXECUTION

Not Used

This space left intentionally blank.

CONTRACTOR'S COMPANY NAME

ADDRESS

SUBMISSION TRANSMITTAL FORM

TOWN OF RIVERHEAD / RIVERHEAD SEWER DISTRICT

841 OLD COUNTRY ROAD SEWER MAIN & EASEMENTRELOCATION

H2M PROJECT NO.: 18-01

Product, Item, or System Submitted:			
Submission Date:		**Submission Log No.:**	
Specification Section:		**Paragraph Reference:**	
Contract Drawing Reference(s):			
Manufacturer's Name:			
Manufacturer's Mailing Address:			
Manufacturer's Contact Information:		( )	
	Name	***Tel. no.***	***Email***
Supplier's Name:			
Supplier's Mailing Address:			
Supplier's Contact Information:		( )	
	Name	***Tel. no.***	***Email***
This item is a substitution of the specified item:		☐ **No**	☐ **Yes**
Contractor's Approval Stamp with Signature & Date		Contractor's Brief Comments or Remarks (attach separate letter as needed):	
		By making this submission, we represent that we have determined and verified all field measurements and dimensions, field construction criteria, site and building constraints in terms of limitations in moving the item into the enclosed space, materials, catalog and model numbers and similar data and that we have checked and coordinated this submission with other work at or adjacent to the installed location in accordance with the requirements contained in the Contract Documents.	

END OF SECTION

PART 1 - GENERAL

1.1 SECTION INCLUDES

A. Codes

B. Governing agencies

C. Permits

1.2 CODES

A. Comply with the requirements of the various codes referred to in these Specifications. Such codes shall be the date of the latest revision in effect at the time of receiving bids.

B. If there is a conflict between local, state, and/or Federal regulatory requirements, seek a consultation with the State Department of Labor. Resolve conflicts to the satisfaction of the State Department of Labor prior to commencing work.

1.3 GOVERNING AGENCIES

A. All work shall conform to and be performed in strict accordance with all governing agencies such as, but not limited to:

1. Occupational Safety and Health Act - OSHA
2. State Department of Environmental Conservation
3. State Building Code
4. State Fire Code
5. National Fire Protection Association - NFPA
6. National Electrical Code
7. State Plumbing Code
8. State Energy Code
9. County Department of Health
10. Town Codes, Rules, Laws and Ordinances
11. Sewer District Sewer Use Code
12. Local Water District
13. Electric utility
14. Gas Utility
15. Village Codes

16. State Education Department

1.4 PERMITS AND INSPECTIONS

A. Representatives of the Owner shall have access to the work for inspection purposes. The Contractor shall provide facilities suitable to the Owner to facilitate inspections of the installed work.

B. Obtain and pay for all permits, fees, licenses, certificates, inspections and other use charges required in connection with the work.

C. Such permits include, but are not limited to:

1. Transportation and disposal of construction debris

2. Suffolk County DPW Highway Work or Access permit

1.5 COORDINATION WITH ELECTRIC UTILITY COMPANY

A. Comply with the utility company requirements for the relocations of incoming electric services as directed by Engineer.

B. Pay the utility company's charges in connection with relocations of existing services as directed by the Engineer.

C. An allowance for the utility company's charges is included in Section 012100.

1.6 COORDINATION WITH GAS UTILITY COMPANY

A. Comply with the gas utility company requirements including inspection for the incoming gas service as directed by Engineer.

B. Pay the utility company's charges in connection with the relocation and inspection of existing service.

C. An allowance for the utility company's charges is included in Section 012100.

1.7 COORDINATION WITH WATER UTILITY

A. Comply with the water utility requirements for potential water and fire service relocations as directed by Engineer.

B. Obtain and pay for all necessary permits from the water utility. Obtain authority to connect to the existing water mains.

C. Make necessary connections to existing public water mains under supervision of the water utility representative. Connections to existing public water mains will be made by the water utility.

D. An allowance for the utility company's charges is included in Section 012100.

1.8 COORDINATION WITH SANITARY SEWER UTILITY

A. Comply with the public utility requirements for the connection of sanitary sewer lines to the public utility services. Obtain and pay for all necessary permits from public sewer department. Obtain authority to connect to their existing sanitary sewers.

B. Make necessary connections to existing public sewer lines under the supervision of sewer department's representative. Connections to the existing public sanitary sewer will be made by the public sewer department.

1.9 COORDINATION WITH TELEPHONE UTILITY COMPANY

A. Comply with the utility company requirements for the relocation of existing incoming telephone services as directed by Engineer.

B. Pay the utility company's charges in connection with the installation of the incoming service. An allowance for the utility company's charges is included in Section 012100.

1.10 UTILITY WORK WITHIN SUFFOLK COUNTY HIGHWAY RIGHT-OF-WAY

A. Utility Work, either overhead or underground, within the boundaries of the Suffolk County highway right-of-way, shall conform with procedures set forth by the Suffolk County Department of Public Works Highway Department Utility Highway Work Permit requirements.

PART 2 - PRODUCTS

Not Used

PART 3 - EXECUTION

Not Used

END OF SECTION

PART 1 - GENERAL

1.1 ABBREVIATED SUMMARY

A. This Section explains the format of the specifications.

1.2 SPECIFICATION FORMAT

A. The Specifications are generally arranged according to the Construction Specifications Institute (CSI) format. Most of the technical requirements are specified in the technical specifications of the document, which are grouped into forty-eight (48) major divisions. Most of the legal and administrative requirements are included in Division 01, General Conditions, Information for Bidders, and the Contract (agreement).

B. Technical sections are arranged in numerical order however section numbers may not be consecutive from section to section.

C. Page numbering is subordinate to each section.

D. Most sections are generally broken down into three (3) parts:

1. PART 1 - GENERAL

2. PART 2 - PRODUCTS

3. PART 3 - EXECUTION

E. Not all these parts may be used and in some cases, the title of some of the parts may be different than listed above. Paragraph numbers are subordinate to each part.

F. The Contractor is advised that the format described here is flexible in nature.

1. There is some overlapping of specified information between various portions of the Specifications.

2. In all cases, the entire requirements of the Contract Documents for the project shall apply.

G. <u>Explanations:</u>

1. Many technical sections begin with a paragraph titled “SECTION INCLUDES”, “DESCRIPTION”, or similar wording.

a. In these paragraphs, a brief listing of the specified products may appear or a brief description of the work generally specified in that section is presented.

b. These descriptions or listings are not all inclusive, but merely are provided as an aid in locating subject matter.

c. In some cases, special cost related items of work are called to the attention of the Contractor in these opening paragraphs.

2. “RELATED SECTIONS” or “RELATED WORK” or similar wording paragraphs list or reference related work specified elsewhere in the Contract Documents. Such listing is not all inclusive, rather, they are merely an aid to the Contractor in locating some of the other Specification Sections wherein work is specified which has a particularly close interrelationship with the work specified in that section.

    a. It shall be understood that all of the Work, and all of the Specifications and other portions of the Contract Documents, are interrelated, and that the total of all requirements set forth in all of the Contract Documents shall be met.

    b. Equipment suppliers and manufacturers shall be advised of the requirements for making submittals and delivering products, as specified in Division 1 sections, even if said sections are not referenced therein that section.

3. “REGULATORY REQUIREMENTS” or “REFERENCES” or similar wording paragraphs describe standards, laws, guidelines, regulations, and standards related to workmanship and installation of the products specified which shall be followed by the Contractor in completing the work specified therein that section as if it was written there in that section. All such requirements and references shall be latest issue in effect at the time of the bid opening.

4. When a “GUARANTEE” or “WARRANTY” paragraph appears in the section it is calling attention to a guarantee which extends beyond the period of the Contractor’s Guarantee called for in the administrative portion of the Contract Documents or it states special requirements specific to the equipment, systems or products specified in that section.

PART 2 - PRODUCTS

Not Used

PART 3 - EXECUTION

Not Used

END OF SECTION

PART 1 - GENERAL

1.1 - SECTION INCLUDES

A. Requirements for pre-installation meetings.

1.2 – PRE-INSTALLATION MEETINGS

B. As required in individual specification sections, convene a pre-installation meeting at the site prior to commencing work of the section.

C. Pre-installation meetings are to be convened at least one week prior to commencing work on the section. The contractor shall arrange and require attendance of Owner/Engineer and parties directly affecting, or affected by, work of the specific section.

1. At least seven (7) calendar days advance notice is to be given.

2. The Contractor shall prepare agenda and preside at meeting. At a minimum the following items are to be discussed:

3. Review conditions of installation, preparation and installation procedures.

4. Review coordination with related work.

PART 2 - PRODUCTS

Not Used

PART 3 - EXECUTION

Not Used

END OF SECTION

PART 1 - GENERAL

1.1 SECTION INCLUDES

A. Requirements for monitoring the quality of the constructed project.

B. Services of an independent testing laboratory for quality assurance testing.

C. The services of the testing laboratory will be paid for out of the cash allowance included by the Contractor in the price as bid in accordance with the requirements contained herein and in Section 012100 – Allowances.

1.2 REFERENCES

A. ASTM C1077 - Practice for Laboratories Testing Concrete and Concrete Aggregates for Use in Construction and Criteria for Laboratory Evaluation.

B. ASTM D3740 - Practice for Evaluation of Agencies Engaged in Testing and/or Inspection of Soil and Rock as Used in Engineering Design and Construction.

C. ASTM D4561 - Practice for Quality Control Systems for an Inspection and Testing Agency for Bituminous Paving Materials.

D. ASTM E699 - Practice for Criteria for Evaluation of Agencies Involved in Testing, Quality Assurance, and Evaluating Building Components in Accordance with Test Methods Promulgated by ASTM Committee E6.

1.3 QUALITY ASSURANCE - CONTROL OF INSTALLATION

A. Monitor quality control over suppliers, manufacturers, products, services, site conditions, and workmanship, to produce work of specified quality.

B. Comply with specified standards as a minimum quality for the work except when more stringent tolerances, codes, or specified requirements indicate higher standards or workmanship that is more precise.

C. Perform work by persons qualified to produce workmanship of specified quality.

D. Secure products in place with positive anchorage devices designed and sized to withstand stresses, vibration, physical distortion or disfigurement.

E. Verify that field measurements are as indicated on shop drawings or as instructed by the manufacturer.

1.4 QUALITY ASSURANCE - TESTING LABORATORY

A. In order to establish compliance with the Contract Documents, materials shall be tested, examined and evaluated before they are incorporated into the work. During and after installations, additional tests, examinations, and evaluations shall be made to determine continued compliance throughout the course of the work.

B. Testing laboratory shall be a reputable, experienced firm that is capable of performing all of the required testing and authorized to operate in the state in which the project is located.

C. Perform all sampling and testing in accordance with specified procedures and use the materials, instruments, apparatus, and equipment required by the codes, regulations and standards. Where specific testing requirements or procedures are not described, perform the testing in accordance with all pertinent codes and regulations and with recognized standards for testing.

D. In the event that samples and test specimens are not properly taken, handled, stored or delivered or if other requirements of this Section are not complied with, Engineer/Architect reserves the right to delegate any or all of this work to others, or to take whatever action deemed necessary to ensure that sampling and testing are properly accomplished, for which all costs shall be borne by Contractor.

E. Engineer/Architect reserves the right to disapprove the use of a specific testing laboratory, even after prior approval, if the laboratory fails to meet or comply with the requirements of this Section. If this should occur, immediately discharge the testing laboratory and retain the services of a different laboratory acceptable to Engineer/Architect.

F. The testing laboratory shall meet the following criteria:

1. Be capable of performing all of the required tests.

2. Be regularly engaged in performing the types of services required.

3. Have adequate facilities, materials, equipment, and personnel to perform the services.

4. Have an adequately trained, experienced and qualified staff.

5. Have at least one registered professional engineer licensed in the state in which the project is located who shall be capable of performing field tests, supervising laboratory testing and interpreting test results. The professional engineer shall be thoroughly knowledgeable in materials, soils, asphalt paving and concrete.

6. Shall be able to be on the Project site within two hours after being notified.

7. Comply with the requirements of ASTM C1077, ASTM D3740, ASTM D4561, ASTM E548 and ASTM E699.

8. Testing Equipment: Calibrated at reasonable intervals with devices of an accuracy traceable to either National Bureau of Standards or accepted values of natural physical constants.

1.5 REFERENCE STANDARDS

A. Conform to reference standards by date that the project was last bid.

B. Obtain copies of standards when required by Contract Documents.

C. Should specified reference standards conflict with Contract Documents, request clarification from Engineer/Architect before proceeding.

D. The contractual relationship of the parties to the Contract shall not be altered from the Contract Documents by mention or inference otherwise in any reference document.

1.6 SUBMITTALS

A. Within fifteen (15) calendar days from the date of the Notice to Proceed, submit documentation from three (3) testing laboratories that clearly indicates experience, location, qualifications of staff, and descriptions of any limitations or restrictions of the firm.

1. Include a price schedule for standard tests and a billing rate schedule for technician classifications.

2. Based upon this information, the Engineer/Architect will select one firm to be the primary testing laboratory and one firm to act as a standby.

B. Certified copies of each test report shall be mailed directly to the Engineer/Architect. The Contractor shall arrange with the laboratory to secure copies.

C. Each report shall be in writing and shall include the testing method used, the test results, the specified results, the exact location of where the test specimens were taken, the date taken, Project identification, Contractor's name and other pertinent information required for a complete and meaningful test report.

D. Each report shall be signed and certified by a responsible officer of the testing laboratory.

E. Mail reports directly to Engineer/Architect within 24 hours after the sample is taken, except in those instances when tests cannot be immediately performed because of required curing, incubation periods, or lengthy testing procedures.

F. The laboratory shall verbally communicate test results when requested by the Engineer/Architect. This does not eliminate nor replace the requirements for a written report.

1.8 SCHEDULING - LABORATORY SERVICES

A. Except where otherwise specified, the Engineer/Architect will determine the number of samples to be taken, the date and time samples will be taken and tests made, the number and type of tests to be performed, who will collect the samples, how they will be handled and stored and when laboratory personnel are required on site.

B. Engineer/Architect will notify Contractor of his decision to take samples and/or have tests made and provide him with the pertinent information. Contractor is responsible for notifying the testing laboratory and for having the testing performed, on schedule.

C. In addition to the above, Contractor shall make his own arrangements for the sampling and testing of materials he proposes to incorporate into the work. This shall not be paid for out of the cash allowance.

D. Notify Engineer/Architect at least 72 hours in advance of the times at which scheduled samples or tests will be conducted.

E. If samples and/or tests cannot be taken or performed when required, delay the work until such time that they can be accomplished. Where possible, any work that has been installed but has not been sampled or tested as required, shall be tested by other means. Upon Engineer/Architect's request, uncover any work, which has been buried or covered, and perform special tests designated by Engineer/Architect. If the work cannot be tested by other means, Engineer/Architect may declare the work unacceptable. All costs associated with noncompliance

and for special testing shall be borne by the Contractor and not be paid for out of the cash allowance.

F. Should the testing laboratory be scheduled to take or collect samples or to perform tests, and finds that it is unable to do so as a result of delays in construction, inclement weather, or any other reason, reschedule the tasks for a date acceptable to Engineer/Architect. Costs associated with times testing laboratory is unable to perform scheduled services shall be borne by the Contractor and will not be paid for under the allowance.

G. Plan all work and operations to allow for the taking and collection of samples and allow adequate time for the performance of tests. Delay the progress of questionable work until the receipt of the certified test reports.

1.9 TESTING REQUIREMENTS

A. Compaction Testing - Soil:

1. Perform compaction testing in accordance with ASTM D2922, Standard Test Methods for Density of Soil and Soil-Aggregate in Place by Nuclear Methods (Shallow Depth) or ASTM D1556 Density and Unit Weight of Soil In Place by the Sand Cone Method.

2. Perform tests and analysis of fill material in accordance with ANSI/ASTM D698 - Test Methods for Moisture-Density Relations of Soils and Soil-Aggregate Mixtures, Using 5.5 lb. Rammer and 12-inch Drop.

B. Compaction Testing - Asphaltic Concrete Pavement:

1. Perform asphaltic concrete compaction testing in accordance with ASTM D2950 - Standard Test Method of Density of Bituminous Concrete in Place by Nuclear Methods.

2. Calibrate nuclear density measurement equipment based on theoretical maximum specific gravity of asphaltic concrete pavement material.

3. Perform test to determine theoretical maximum specific gravity in accordance with ASTM D2041 Theoretical Maximum Specific Gravity of Bituminous Pavement Mixtures. Perform test on mix at plant prior to delivery. Collect sample at plant in accordance with ASTM D979 - Sampling Bituminous Paving Mixtures and perform test in approved laboratory if plant does not have necessary equipment.

C. Concrete Testing:

1. Collect samples in accordance with ASTM C172, Practice for Sampling Freshly Mixed Concrete.

2. Make test cylinders in accordance with ASTM C31, Standard Practice for Making and Curing Concrete Test Specimens in the Field.

3. Test concrete cylinders in accordance with ASTM C39, Standard Test Method for Compressive Strength of Cylindrical Concrete Specimens.

4. Test slump and air entrainment.

D. Asphalt Testing:

1. Collect samples at point of delivery in accordance with ASTM D979, Standard Practice for Sampling Bituminous Paving Mixtures.

2. Perform extraction test in accordance with ASTM D2172, Standard Test Methods for Quantitative Extraction of Bitumen from Bituminous Paving Mixtures.

3. Perform gradation test in accordance with ASTM C136, Method for Sieve Analysis of Fine and Coarse Aggregates.

1.10 TESTING SCHEDULE

A. Compaction Testing of Soil:

1. Pipe Installation: As directed by the Engineer/Architect.

2. Concrete flatwork: As directed by the Engineer/Architect.

3. Pavement subgrade: As directed by the Engineer/Architect.

B. Concrete Testing: Make six (6) concrete test cylinders for each 50 cubic yards or fraction thereof.

1. Test two (2) cylinders at 7 days.

2. Test two (2) cylinders at 28 days.

3. The remaining cylinders shall be tested at a time to be determined by the Engineer/Architect. This requirement shall be subject to change as required by the Engineer/Architect.

C. Asphalt Testing: As directed by the Engineer/Architect.

D. Compaction Testing of Pavement: As directed by the Engineer/Architect.

1.11 FIELD OBSERVATION OF CONTRACTOR'S WORK

A. The Engineer/Architect will provide periodic observation of the Contractor's work in accordance with the General Conditions of the Contract.

PART 2 - PRODUCTS

Not Used

PART 3 - EXECUTION

3.01 EXAMINATION

A. Verify that existing site conditions and substrate surfaces are acceptable for subsequent Work. Beginning new Work means acceptance of existing conditions. Verify that the existing substrate is capable of structural support or attachment of new Work being applied or attached. Examine

and verify specific conditions described in individual specification sections. Verify that utility services are available, of the correct characteristics, and in the correct locations.

3.02 PREPARATION

A. Clean substrate surfaces prior to applying next material or substance. Seal cracks or openings of substrate prior to applying next material or substance.

B. Apply manufacturer required or recommended substrate primer, sealer, or conditioner prior to applying any new material or substance in contact or bond.

3.03 FIELD QUALITY CONTROL

A. Allow representatives of the testing laboratory access to the work at all time. Provide all equipment, labor, materials, and facilities required by the laboratory to properly perform its functions. Cooperate with and assist laboratory personnel during the performance of their work.

B. Test specimens and samples shall be taken by the person(s) designated in other Sections, or as directed by Engineer/Architect. Conduct field sampling and testing in the presence of Engineer/Architect. Provide all materials, equipment, facilities and labor for securing samples and test specimens and for performing all field-testing.

END OF SECTION

PART 1 - GENERAL

1.1 SECTION INCLUDES

A. Asbestos and lead-based paint certification.

B. Moisture control.

1.2 RELATED SECTIONS

A. Section 014100 – Regulatory Requirements

B. Section 015719 – Temporary Environmental Controls

1.3 MOISTURE CONTROL

A. Maintain a strict policy and protocol for the control of water infiltration and moisture build-up during the course of the project. The plans and specifications are not intended to depict each and every condition or detail of construction. As the knowledgeable party in the field, the Contractor is in the best position to verify that all construction is completed in a manner which will provide a watertight structure. The Contractor has the sole responsibility for ensuring the watertight integrity of the structure. The Contractor's contractual obligations include, but are not limited, to the following:

B. Water Infiltration: If the Contractor observes water infiltration (unintended) into a completed building or an ongoing construction site, he must immediately report the condition to the Owner and Architect/Engineer, and shall immediately take steps to investigate the source of the water infiltration, identify the responsible party (person who performed work that resulted in water infiltration) and devise a procedure to promptly eliminate water infiltration into the building.

C. Handling of Water-Damaged Building Materials and Construction:

1. Inspect all building materials delivered to the site for pre-existing water damage, as well as existing mold growth.

2. If in-place construction becomes wet, notify the Owner and Architect/Engineer immediately. The Owner and Architect/Engineer will determine whether or not the work shall be removed and replaced, or if the type of material can be permitted to dry.

3. Under no circumstances may new or additional construction be placed over, or otherwise enclose, wet building materials.

D. Visible Mold/Mildew:

1. If the Contractor observes any substance that appears to be mold or other fungal growth and/or an unidentified substance within a completed building or the ongoing construction site, he shall immediately suspend construction operations in the area, and report the condition to the Owner and Architect/Engineer.

2. No person shall be allowed back into the affected area without permission of the Owner.

1.4 SUBMITTALS

A. Submit completed and notarized “Certification of Asbestos and Lead-Based Paint” form.

PART 2 - PRODUCTS

Not Used

PART 3 - EXECUTION

Not Used

Certificate of Asbestos and Lead-Based Paint

(New Work)

Client's Name: _____

Project Location: _____

Project Address: _____

Project Name: _____

Project Number: _____

Certification:

This Contractor hereby certifies that no asbestos-containing material and lead-based paint, as defined by applicable federal and state regulations, has been furnished or installed at the referenced project:

Contractor Name: _____

Signature: _____

Address: _____

_____

Telephone: _____ Date Executed: _____

THIS FORM SHALL BE NOTARIZED

END OF SECTION

PART 1 - GENERAL

1.1 SECTION INCLUDES

A. Temporary facilities, utilities, and controls to be furnished by the Contractor for this project.

1.2 CARE AND PLACEMENT

A. All temporary and permanent facilities and controls and all other elements on the project site shall meet all standards of the Occupational Safety and Health Act of 1970 and subsequent revisions. Contractor shall comply with all requirements of the Act.

B. Take every precaution and provide such equipment and facilities as are necessary or required for the safety of its employees and persons at the site.

C. In the event of damage to existing and/or temporary facilities then immediately make all repairs and replacements to an equal condition prior to the event.

1.3 QUALITY PERFORMANCE

A. Comply with and perform all work in accordance with the requirements of local authorities and utility companies having jurisdiction, and all applicable codes, regulations and ordinances.

B. Secure approvals from the appropriate jurisdictions and utility companies on all repairs, relocations, connections, disconnections and the Work.

C. All barricades, warning signs, lights, temporary signals and other protective devices shall conform with “Manual on Uniform Traffic Control Devices for Streets and Highways”, US Government Printing Office.

1.4 SUBMITTALS

A. Provide a list of contact numbers as follows:

1. Contractor’s superintendent and office project manager (home, beeper, cellular, office, fax, trailer, and email address).

2. All subcontractors.

3. All utility companies.

4. Emergency services such as fire department, police, and ambulance.

B. Submit the following:

1. Name and qualifications of person or persons who shall be available to render first aid.

2. Names, addresses and telephone numbers of personnel who can be telephoned and act on behalf of Contractor in the event of emergencies or other problems requiring prompt attention during winter shutdown, holidays, nights and other periods when the Contractor’s superintendent may be absent from the project site.

1.5 CONTRACTOR'S RESPONSIBILITY

A. The Contractor shall be responsible for the installation, performance, maintenance, and repair of all temporary facilities and controls specified herein this Section as originally provided.

B. The Owner reserves the right to immediately correct a Contractor caused action, if in the opinion of the Owner, the situation may result in the immediate loss of life, property, and degradation of the environment. The costs for actions taken by the Owner shall be deducted from money due or to become due the Contractor. Amounts in excess shall be paid by the Contractor.

C. If the Contractor caused situation is not deemed immediate, then the Contractor shall, within 24 hours of receipt of written and/or verbal notice, correct the defect or unsatisfactory condition.

D. The Owner may repair, correct, replace, or install temporary facilities to correct the situation if the Contractor fails to perform within the allowed time. The costs to make the corrections shall be deducted from money due or to become due the Contractor. Amounts in excess shall be paid by the Contractor.

PART 2 - PRODUCTS

2.1 GENERAL

A. The Owner may use temporary power lines, pipes, roadways or other facilities that the Contractor furnishes, installs, and maintains (then removes at the completion of the work), during the period of construction.

B. The location of all temporary power lines, roadways, and other necessary temporary facilities shall be subject to the approval of the Engineer/Architect, and these shall be located and operated so as not to interfere with the operation of the facilities.

2.2 BARRIERS AND PROTECTION

A. Provide railings, barricades, signs, fences and other protective devices to prevent unauthorized entry to construction areas, to allow for the Owner's safe use of the site and to protect existing facilities and adjacent structures from damage from the work.

B. Provide barricades and covered walkways required by governing authorities for public rights-of-way and for public access to existing buildings.

C. Provide protection for plant life designated to remain.

D. Protect vehicular traffic, stored materials, public utilities, site and structures from damage.

E. Provide warning signs, detour signs and other traffic control devices to insure the safety of plant operators and to adequately direct traffic around the work. Illuminate barricades, obstructions, and warning signs from sunset to sunrise.

2.3 TEMPORARY FENCING

A. The Contractor is responsible for performance compliance with OSHA standards.

B. Provide temporary safety fence around all open excavations or other dangerous conditions on the construction site.

1. All temporary safety fencing shall be designed and erected in compliance with OSHA standards, but in no case less stringent than these specifications for fencing.

2. Fence is to be bright orange in color, a minimum of 4 feet high, and properly secured using 1-inch diameter steel pipe at 4-feet on-center as support posts.

3. Stake each support post to a depth of 18-inches and tamp securely into place.

4. Each post shall be plumb.

5. Secure fencing to posts using heavy-duty 12-inch long cable ties or tie wire.

6. The fence and supports shall remain the property of the Contractor and be promptly removed at the appropriate time.

2.4 EROSION CONTROL

A. Provide measures to keep the ground surface well drained, but avoid erosion of embankments, excavations, the project site, and adjacent areas.

B. Comply with all local codes, rules, and regulations concerning soil erosion.

1. Use hay bales or silt fences to control erosion to the satisfaction of the Engineer/Architect and regulatory agencies. Use hay bales or silt fences to stop silt and sediment from reaching surface waters, parking lots and roads.

2. Leave erosion control methods in place until ground cover is established or until date of substantial completion.

C. Install erosion control measures as shown on the Drawings.

2.5 DUST CONTROL

A. Provide measures to control dust resulting from the work.

B. Control dust at locations and in such quantities and frequencies as required to prevent dust from becoming a nuisance to the surrounding area.

C. In the event the Contractor does not adequately provide for dust control, or should insufficient quantities of dust control agents be placed and Contractor fails to place additional quantities within 4 hours after Engineer/Architect's direction, Owner will perform the required work by whatever means deemed expedient and all expenses incurred by Owner will be charged to and paid by Contractor.

D. Take care in selecting and applying dust control agents so as not to make roadways or walkways slippery, muddy or hazardous. Dust control agents shall be acceptable to the Engineer/Architect.

E. Provide all roadways with dust control.

2.6 RUBBISH REMOVAL

A. The Contractor shall be responsible for overall rubbish removal.

B. Burning of rubbish and trash will not be permitted.

C. Dispose of rubbish and waste materials in accordance with state regulations and local ordinances.

D. Place rubbish containers at locations selected by the Engineer/Architect.

1. Furnish adequately sized rubbish containers from the date of initial mobilization to the date of final payment.

2. As a minimum, the Contractor shall furnish three (3) 55-gallon general trash containers. Secure the top of each container to the container.

3. Secure the container itself so that it does not get blown about the site.

E. Maintain site free of trash and debris.

2.7 ENCLOSURES

A. Provide and maintain temporary enclosures, sheds, or fenced-in areas to accommodate protection for products, material and equipment.

B. Store equipment that cannot be exposed to outdoors in accordance with Section 016500 - Product Delivery, Storage and Handling.

2.8 SECURITY

A. Provide security and facilities to protect work from unauthorized entry, vandalism and theft.

B. Coordinate with Owner's security program, if applicable.

C. The Contractor has full responsibility for the working area until final acceptance and payment.

2.9 PARKING

A. Do not allow heavy construction vehicle parking on existing pavement, if existing pavement is not scheduled for replacement or restoration.

B. Provide and maintain access to fire hydrants, building entrances, process tanks, doors and the work in general.

C. The Contractor shall have his or her employees and subcontractors park in areas designated by the Owner/Engineer/Architect.

D. If designated on the Contract Drawings, then only use those areas for parking.

2.10 DAMAGES

A. The Contractor, with the prior approval of the Owner/Engineer/Architect, shall promptly repair any damage, directly or indirectly caused by the Contractor's operations.

B. All repairs shall be to the complete satisfaction of the Owner and equal in quality to that which pre-existed.

2.11 FIRST AID FACILITIES & EMERGENCY TELEPHONE NUMBERS

A. Provide and maintain adequately equipped first aid facilities in a location or at locations that are readily accessible to workmen, Engineer/Architect and visitors to the site.

B. Provide at least one on-site employee who is properly trained in first aid and who shall be available to render first aid whenever construction is in progress.

C. Provide a list of emergency telephone numbers as specified above.

D. Post the list of emergency telephone numbers as directed by the Engineer/Architect.

2.12 POLLUTION CONTROL

A. Do not permit pollutants, such as chemicals, fuels, lubricants, calcium chloride, sewage, water containing sediments and other deleterious, poisonous, toxic or oxygen demanding substances to enter or leach into streams, lakes, wetlands, other surface waters, into groundwater, or into the air.

B. Provide control measures to assure that turbidity in the receiving water will be increased not more than 10 standard turbidity units (s.t.u.) in the absence of other more restrictive locally established limitations, unless otherwise permitted by the State.

C. In no case shall the classification for the surface water be violated, unless otherwise permitted by the State.

D. In water used for other purposes, the turbidity shall not exceed State limits.

2.13 REMOVALS

A. Remove all items provided under this Section except as otherwise specified.

PART 3 - EXECUTION

3.1 PROTECTION OF EXISTING UTILITIES AND PUBLIC WORKS

A. Maintain and protect existing utilities and public works including, but not limited to, conduits, sewers, water mains, electric and telephone conductors or conduits, and gas mains encountered during the construction.

B. In the event that it is not possible to cross over, under, around or otherwise avoid the existing utility, the owner of the utility shall be notified that the utility must be altered or moved.

C. In the event that damage shall result to any service pipe for water or gas, or any private or public sewer or conduit, the Contractor shall immediately, and at its own expense, repair same to the satisfaction of the Engineer/Architect.

D. Any contents from the pipes, sewers or conduits shall be immediately removed and disposed in accordance with applicable laws.

3.2 REMOVAL OF UTILITIES, FACILITIES AND CONTROLS

A. Remove temporary above grade or buried utilities, equipment, facilities and materials, immediately following substantial completion and prior to release of retainage.

B. Remove underground installations to a minimum depth of 2 feet.

C. Regrade site to restore to existing slope and elevation, and restore the surface.

D. Clean and repair damage caused by installation or use of temporary work.

E. Restore existing facilities used during construction to original condition. Restore permanent facilities used during construction to specified condition.

F. Remove temporary parking and access roads.

G. Regrade area to existing slope and elevation and restore the surface to its existing condition.

H. Final payment will not be processed until all removals have been completed to the satisfaction of the Owner/Engineer/Architect.

3.3 PROTECTION OF EXISTING PROPERTY

A. Protect existing structures and finishes during performance of the work.

B. Protect existing trees and plants during performance of the work.

C. Do not deposit excavated materials or store materials around trees or plants or attach guy wires to trees.

END OF SECTION

PART 1 - GENERAL

1.01 – SECTION INCLUDES

A. Temporary system of pumps, pipes and appurtenances to convey sanitary wastewater to allow the work to be performed.

B. Standby equipment for the temporary sanitary wastewater conveyance system to assure continuous operation.

1.02 – SYSTEM DESCRIPTION

A. Each temporary pump shall be capable of conveying the design operating flow rate.

B. Provide pump control elements such as floats to prevent surcharging of wastewater into the piping system and overflow from structures.

C. Pumps handling raw and partially treated wastewater shall be capable of passing a sphere of at least 3-inches in diameter.

D. Pump suction and discharge openings shall be at least 4-inches in diameter.

E. Maintain sanitary conditions to allow work to be performed. Protect equipment, suction piping and discharge piping main from inclement weather, freezing conditions and traffic.

F. Prevent leakage and spillage of wastewater.

G. Provide walkways over obstructions on sidewalks to maintain pedestrian traffic.

H. Provide ramps or below grade piping to maintain vehicular traffic.

I. Provide alarm system to indicate increase above normal operating liquid level in manhole /sewer.

J. Electrical system and components in sewers and raw wastewater wet wells shall comply with the National Electric Code requirements for Class I, Group D, Division 1 locations.

K. Provide spare suction and discharge piping at the project site.

L. For temporary sanitary wastewater conveyance systems located in roadways, provide signs and traffic controls in accordance with the State Manual of Uniform Traffic Control Devices.

M. Obtain confined space entry permit from Owner.

1.03 – SUBMITTALS

A. Submit under provisions of Section 013300.

B. Provide a written plan of the proposed temporary sanitary wastewater conveyance system to the Engineer/Architect at least two weeks prior to the need for the system.

1. The written plan shall include number size and type of pumps, material, diameter and proposed route of piping and/or hoses, control system, back-up and spare equipment, and estimated duration of bypass operation.

2. Provide a schematic diagram of the system if so requested by the Engineer/Architect.

PART 2 - PRODUCTS

2.01 – PRODUCTS

A. Provide close coupled centrifugal pump with vacuum priming compressor mounted to a diesel engine or electric motor on skid base or two-wheeled highway trailer, or submersible pump.

B. Provide solids handling ball type check valve with flexible rubber seat and quick release access feature with centrifugal pumps.

C. Provide compact unit mounted on skid base or two-wheeled highway trailer. Either option shall include overnight running fuel tank.

D. Engines shall be equipped with critical silencers and be housed to minimize noise during operation.

E. Provide suction hose from source to pump.

F. Provide plugs in the upstream manhole to prevent flow from the upstream sanitary sewer through the sewer in the work location.

PART 3 – EXECUTION

3.01 – INSTALLATION

A. Furnish all labor, materials, equipment and appliances necessary to maintain both vehicular and pedestrian traffic, to protect the public from all damage to person and property and to minimize inconveniences to the facilities adjacent to the work areas for the duration of the use of the temporary sanitary wastewater conveyance system in accordance with the Contract and the appropriate State, County or local agency.

B. Install, operate and maintain bypass pumping system in accordance with manufacturers instructions.

C. Install plugs or other devices to prevent flow into out of service facilities.

D. Test temporary conveyance system to the satisfaction of the Engineer/Architect prior to usage.

E. System shall require low level of maintenance, typically confined to checking engine oil levels and seal cavity oil levels.

F. Provide full-time personnel to continuously operate the bypass system to assure continuous wastewater conveyance for entire time use of the system is required.

G. Conduct work to minimize duration of bypass pumping system operation.

END OF SECTION

PART 1 - GENERAL

1.1 SUMMARY

A. Work under this section includes furnishing all labor, materials, equipment and appliances necessary to maintain both vehicular and pedestrian traffic, to protect the public from all damage to person and property, and to minimize inconveniences to the residences and businesses adjacent to the contract area for the duration of the contract. All work shall be done in accordance with the specifications, and the appropriate State, County or local agency, and in accordance with the Manual of Uniform Traffic Control Devices (MUTCD).

1.2 SYSTEM DESCRIPTION

A. Maintain traffic over a reasonably smooth travel way which shall be so marked by signs, delineations and/or other methods so that a person who has no knowledge of conditions can safely, and with a minimum of discomfort and inconvenience, ride, drive or walk over all or any portion of the roadway under construction. This shall include the maintenance of temporary pavement in accordance with the appropriate temporary pavement specifications.

B. Prepare and submit a plan to the Engineer, outlining a schedule of operations for the maintenance, protection and detouring of traffic, showing in complete detail the methods, sequences, procedures and facilities he proposes to install. If required, Contractor shall also submit a detailed maintenance and protection of traffic scheme to the appropriate local agency and shall secure written approval from that agency prior to beginning work.

C. For work on State highways, the Contractor will be required to prepare and submit a detailed maintenance and protection of traffic plan to the New York State Department of Transportation (NYSDOT) for approval before a road opening permit can be issued and work can begin. All detour schemes and maintenance details shall conform to the requirements of the latest edition of the MUTCD and Section 619 of the New York State Standard Specifications dated January 2, 2008, and latest addenda.

D. The Contractor is placed on notice that the maintenance and protection of traffic over this highway during construction is considered as important and necessary an item of work as is the actual construction itself. The Contractor shall at all times conduct his operation in a manner to ensure the safety of motorists, pedestrians and his own employees.

E. Protect the user from damage to person and property by reason of any construction operation (i.e., painting, paving, blasting, tree work, demolition, etc.) by such protective screens, devices or methods as are approved by the appropriate governing agency.

F. Under this item Contractor shall be responsible for the maintenance within the limits of the contract of the entire pavement, drainage facilities and other highway elements, both old and new, beginning on the date construction commences and ending on the date the contract is officially accepted.

G. Schedule work so as to minimize the amount of the old travel way that is destroyed or substantially damaged at any one time.

H. Throughout the course of the work, the health and welfare of the people shall be provided for. Ascertain, at least one week in advance of proposed work, the specific needs of individuals whose homes or places of business may be inaccessible for periods of time while required construction work is in progress. In all such cases, make all arrangements with health, safety and protective agencies to ensure that any and all emergency or accidental needs of seriously hampered people will be cared for. Roads which must be closed to traffic completely shall be completed during the normal work week. One week's advance notification of construction shall be given to affected area residents.

1.3 SUBMITTALS

A. Submit a detailed maintenance and protection of traffic plan to the appropriate State, County or local agency with jurisdiction of the work area and secure written approval from that agency prior to beginning work.

B. Provide a copy of approved plan to Engineer.

1.4 MATERIALS

A. Materials used shall comply with the requirements for the various items or materials as established in the specifications or the plans.

B. Temporary signs, delineators, barricades, lighting and other warning and guiding devices shall be as approved by the appropriate State, County or local agency, and will remain the property of the Contractor.

C. Thirty to fifty-gallon drums or containers set on end may be used as delineators, provided they are painted orange and white and kept clean at all times. Other markers or delineators may be circular or rectangular in shape and shall be constructed of reflective sheeting having a minimum area of 20 square inches or reflective buttons having a minimum diameter of 3-inches. Reflective delineators or markers shall be yellow, green or amber.

D. Cones shall be standard 28-inch height. The minimum diameter at the base shall be 12-inches. Cones shall be orange in color.

PART 2 - EXECUTION

2.1 PROTECTION

A. General - Provide a travel way suitable for maintaining a minimum of one lane of traffic.

B. Warning Signs and Delineators

1. Erect barricades, detour signs, warning lights and other facilities approved by the appropriate State, County or local agency at the beginning, end and for the entire length of any detours to adequately warn the traveling public that the road is closed and indicate the direction and route of the detour. Conduct operations to ensure a minimum of delay to traffic.

2. Furnish, erect and maintain proper reflectorized signs, indicating to motorists the status of the highway under construction. Warning signs used in conjunction with work zone activities shall have an orange background with black legend.

3. Keep signs clean, mounted at a height of at least five feet so as to be effective both day and night. Sign supports shall display the sign panel in a vertical position. Use signs, warnings, delineators and barricades to adequately inform the motorist of any unusual or unsafe condition and to safely and clearly guide him through the contract area. Place and light such signs, barricades, warnings or devices as to give timely warning and permit the motorist to take the necessary action to traverse the area safely.

4. Mount delineators so that the bottom of the reflective unit is 4 feet above the elevation of the travel way. Mark any area judged by the Engineer to be particularly hazardous by the use of signal flashers with a large reflectorized orange lens, in addition to the reflective markings.

5. Place a green reflective marker on each side of the designated safe entrance to commercial establishments. Keep the entire area between adjacent green markers safe and smooth for convenient ingress and egress.

6. All signs, markers and other facilities shall indicate actual conditions existing and shall be moved, removed or changed immediately, as conditions require. Details and types of signs, temporary barricades, timber curb and other devices as shown on Standard Structure Sheets, Manual of Uniform Traffic Control Devices of the New York State Traffic Commission. These are minimum requirements and the Contractor shall have an adequate quantity of each available for use as required. The Engineer may, if conditions exist, require additional signs. In that event, they shall be consistent with the arrangements, material requirements and details of those shown on the Standard Structure Sheets.

7. Flashing arrow boards shall be positioned at the beginning of the taper for all mainline travel lane closures. One arrow board shall be used for each taper. The arrow boards shall be mounted so that the base of the panel is at least seven (7) feet above the pavement surface. Arrow boards shall not be used for lane shifts where there is no reduction in the number of lanes.

8. Maintenance

9. Take necessary steps to prevent signs from being blown over or displaced by passing vehicles. Ballast used to stabilize sign supports shall be bagged sand or other suitable material approved by the Engineer, and shall be located at ground level.

10. Take necessary steps to prevent cones from being blown over or displaced by passing vehicles. The contractor shall accomplish this by doubling cones or by the use of sandbag rings.

C. Flag persons

1. Whenever it is necessary to maintain traffic, employ a sufficient number of competent flag persons during the time traffic is maintained. Provide a sufficient number of flag persons in areas where traffic is congested, particularly where construction equipment is operating.

2. Workers shall wear hard-hats and safety vests in accordance with Section 107-05 of the Standard Specifications of the New York State Department of Transportation. Flag persons shall wear orange hard-hats and safety vests while flagging. Flag persons shall

be equipped with stop/slow paddles or 24-inch x 24-inch red flags. Flag persons should be instructed in their duties.

D. Maintain all existing highway signs and supports within the contract limits for the duration of the contract.

E. Remove existing signs; store, protect and keep them clean; and replace them when shown on the plans or as directed by the Engineer. Signs not to be replaced shall be cleaned and delivered to the location as directed by the Engineer.

F. Replace signs or markers lost or damaged.

END OF SECTION

PART 1 - GENERAL

1.1 SECTION INCLUDES

A. Control of environmental pollution and damage that the Contractor must consider for air, water, and land resources in preparing a bid and while constructing the project. This Section includes management of site aesthetics, noise, solid and liquid waste and wastewater, and other pollutants that may be generated by the Contractor.

B. Include all costs associated with environmental protection as specified herein and as specified in other Sections of these specifications in the total price bid.

1.2 DEFINITIONS

A. Environmental pollution and damage is defined as the presence of chemical, physical, or biological elements or agents which:

1. Adversely effect human health or welfare,

2. Unfavorably alter ecological balances of importance to human life,

3. Impact wetlands,

4. Effect other species of importance to man, or;

5. Degrade the utility of the environment for aesthetic, cultural, and historical purposes.

B. Definitions of Pollutants:

1. Sediment: Soil and other debris that has been eroded and transported by runoff water.

2. Solid Waste: Rubbish, debris, garbage, and other discarded solid materials resulting from industrial, commercial, and agricultural operations and from community activities.

3. Rubbish: Combustible and noncombustible wastes such as paper, boxes, glass and crockery, metal and lumber scrap, tin cans, and bones.

4. Debris: Combustible and noncombustible wastes, such as leaves, tree trimmings, ashes, and waste materials resulting from construction or maintenance and repair work.

5. Chemical Waste: Petroleum products, bituminous materials, salts, acids, alkalies, herbicides, pesticides, organic chemicals, and inorganic wastes.

C. Sanitary Wastes:

1. Sewage: Domestic sanitary sewage and human and animal waste.

2. Garbage: Refuse and scraps resulting from preparation, cooking, dispensing, and consumption of food.

1.3 SUBMITTALS

A. Submit the following under provisions of Section 013300:

1. Environmental Protection Plan / Erosion Control Plan: After the Contract is awarded and prior to the commencement of the work, meet with the Engineer/Architect to discuss the proposed Environmental Protection Plan and to develop mutual understanding relative to details of environmental protection. Not more than twenty (20) days after the meeting, prepare and submit to the Engineer/Architect for approval, a written and/or graphic Environmental Protection Plan including, but not limited to, the following:

2. Methods for protection of features to be preserved within authorized work areas including trees, shrubs, vines, grasses, ground cover, landscape features, air and water quality, fish and wildlife, soil, historical, and archeological and cultural resources.

3. Permits, licenses, and the location of the solid waste disposal area(s).

4. Drawings showing locations of any proposed temporary excavations or embankments for haul roads, material storage areas, structures, sanitary facilities, and stockpiles of excess or spoil materials.

B. Prepare an Erosion Control Plan describing and showing methods for erosion control that shall be employed by the Contractor to protect adjoining wetlands.

C. Prepare a Work Area Plan showing the proposed activity in each portion of the area and identifying the areas of limited use or nonuse. Plan shall include measures for marking the limits of use areas. This plan may be incorporated within the Erosion Control Plan.

D. Approval of the Contractor's Environmental Protection Plan / Erosion Control Plan will not relieve the Contractor of responsibility for adequate and continued control of pollutants and other environmental protection measures.

PART 2 – PRODUCTS

Not Used

PART 3 - EXECUTION

3.1 PROTECTION OF ENVIRONMENTAL RESOURCES

A. Protect environmental resources within the project boundaries and those affected outside the limits of permanent work during the entire period of this Contract. Confine activities to areas defined by the Contract Documents.

B. Protection of Land Resources: Prior to construction, identify all land resources to be preserved within the work area. Do not remove, cut, deface, injure, or destroy land resources including trees, shrubs, vines, grasses, top soil, and land forms without permission from the Engineer/Architect. Do not fasten or attach ropes, cables, or guys to trees for anchorage unless specifically authorized, or where special emergency use is permitted.

C. Work Area Limits: Prior to any construction, mark the areas that require work to be performed under this Contract. Mark or fence isolated areas within the general work area that are to be saved and protected. Protect monuments, works of art, and markers before construction operations begin. Convey to all personnel the purpose of marking and protecting all necessary objects.

D. Protection of Landscape: Protect trees, shrubs, vines, grasses, land forms, and other landscape features shown on the drawings to be preserved by marking, fencing, or using any other approved techniques.

1. Box and protect from damage existing trees and shrubs to remain on the construction site.

2. Immediately repair all damage to existing trees and shrubs by trimming, cleaning, and painting with antiseptic tree paint.

3. Do not store building materials or perform construction activities closer to existing trees or shrubs than the farthest extension of their limbs.

E. Reduction of Exposure of Unprotected Erodible Soils: Plan and conduct earthwork to minimize the duration of exposure of unprotected soils. Clear areas in reasonably sized increments only as needed to use. Form earthwork to final grade as shown. Immediately protect side slopes and back slopes upon completion of rough grading.

F. Temporary Protection of Disturbed Areas: Construct diversion ditches and berms to retard and divert runoff from the construction site to protected wetlands areas as defined in the Clean Water Act and federal, state and local regulations

1. Erosion and Sedimentation Control Devices:

a. Construct or install all temporary and permanent erosion and sedimentation control features as shown or specified in the Contract Documents and as required by the Owner pursuant to direction of the regulatory authority.

b. Maintain temporary erosion and sediment control measures such as berms, dikes, drains, hay bales, erosion control fencing, sedimentation basins, grassing, and mulching, until permanent drainage and erosion control facilities are completed and operative.

2. Manage borrow areas on and off Owner property to minimize erosion and to prevent sediment from entering nearby property, watercourses and local streets.

3. Manage and control spoil areas on and off Owner property to limit spoil to areas shown on the Environmental Protection Plan and prevent erosion of soil or sediment from entering nearby property, watercourses or streets.

4. Protect adjacent areas from degradation by temporary excavations and embankments.

G. Handle and dispose of solid wastes in such a manner that will prevent contamination of the environment.

1. Place solid wastes (excluding clearing debris) in containers that are emptied on a regular schedule.

2. Transport all solid waste off Owners' property and dispose of waste in compliance with Federal, State, and local requirements.

3. Store chemical waste away from the work areas in corrosion resistant containers and dispose of waste in accordance with Federal, State, and local regulations.

4. Handle discarded materials other than those included in the solid waste category as directed by the Engineer/Architect.

H. Protection of Water Resources: Keep construction activities under surveillance, management, and control to avoid pollution of surface and ground waters and sewer systems. Implement management techniques to control water pollution by the listed construction activities that are included in this Contract.

I. Washing and Curing Water: Do not allow wastewater directly derived from construction activities to enter water areas. Collect and place wastewater in retention ponds allowing the suspended material to settle, the pollutants to separate, or the water to evaporate.

J. Control movement of materials and equipment during construction to prevent violation of water pollution control standards of the Federal, State, or local government.

K. Monitor water areas affected by construction.

L. Protection of Fish and Wildlife Resources:

1. Keep construction activities under surveillance, management, and control to minimize interference with, disturbance of, or damage to fish and wildlife.

2. Prior to beginning construction operations, list species that require specific attention along with measures for their protection.

M. Protection of Air Resources: Keep construction activities under surveillance, management, and control to minimize pollution of air resources.

1. Burning is not permitted on the job site. Keep activities, equipment, processes, and work operated or performed, in strict accordance with the State and Federal emission and performance laws and standards.

2. Maintain ambient air quality standards set by the Environmental Protection Agency and State, for those construction operations and activities specified.

N. Particulates: Control dust particles, aerosols, and gaseous by-products from all construction activities, processing, and preparation of materials (such as from asphaltic batch plants) at all times, including weekends, holidays, and hours when work is not in progress.

O. Particulates Control: Maintain all excavations, stockpiles, haul roads, permanent and temporary access roads, plant sites, spoil areas, borrow areas, and all other work areas within or outside the project boundaries free from particulates which would cause a hazard or a nuisance. Sprinkle, chemical treatment of an approved type, light bituminous treatment, baghouse, scrubbers, electrostatic precipitators, or other methods are permitted to control particulates in the work area.

P. Hydrocarbons and Carbon Monoxide: Control monoxide emissions from equipment to Federal and State allowable limits.

Q. Odors: Control odors of construction activities and prevent obnoxious odors from occurring.

R. Reduction of Noise: Minimize noise using every action possible. Perform noise-producing work in less sensitive hours of the day or week as directed by the Engineer/Architect. Maintain noise-

produced work at or below the decibel levels and within the time periods specified in accordance with OSHA and local ordinances, whichever is more restrictive.

1. Perform construction activities involving repetitive, high-level impact noise only between 8:00 a.m. and 5:00 p.m. unless otherwise permitted by local ordinance or by the Engineer/Architect.

2. Repetitive impact noise on the property shall not exceed the following dB limitations:

3. Provide sound-deadening devices on equipment and take noise abatement measures that are necessary to comply with the requirements of this Contract, consisting of, but not limited to, the following:

    a. Use shields or other physical barriers to restrict noise transmission.

    b. Provide soundproof housings or enclosures for noise-producing machinery.

    c. Use efficient silencers on equipment air intakes.

    d. Use and maintain efficient intake and exhaust mufflers on internal combustion engines.

    e. Line hoppers and storage bins with sound deadening material.

    f. Conduct truck loading, unloading, and hauling operations so that noise is kept to a minimum.

END OF SECTION

PART 1 - GENERAL

1.1 SECTION INCLUDES

A. This Section includes general requirements for products that are to be furnished, installed, or otherwise incorporated into the project.

1.2 QUALITY ASSURANCE APPLIES TO ALL PRODUCTS

A. In addition to the Contractor's warrantees and guarantees on materials and equipment required under the General Conditions of the Contract and the Technical Specifications contained hereinafter, the Contractor shall also be responsible for all materials, equipment, and products that have or is planned to be incorporated into the work.

1. The Contractor shall be responsible for the finished work and that it accurately and completely complies with these Contract Documents.

2. The Contractor shall be responsible for work performed by subcontractors, equipment suppliers, and material vendors.

3. The Contractor shall be satisfied as to the product's performance before it is ordered for installation. At the Contractor's option, he/she shall have tested each product to determine compliance with these specifications.

B. The Engineer/Architect may check all or any portion of the work and the Contractor shall afford all necessary assistance to the Engineer/Architect in carrying out such checks.

1. Such checking by the Engineer/Architect shall not relieve the Contractor of any responsibilities for the accuracy or completeness of the work.

2. Such checking is a courtesy service being provided by the Owner and does not relieve the Contractor of his/her responsibilities under this Construction Contract.

C. If witnessed shop tests or inspections are required at the point of manufacture, the Contractor shall keep the Engineer/Architect advised as to the progress of the work to allow inspection at the proper time and place. Provide at least two (2) weeks advance notice before scheduled shop tests.

D. Should a dispute arise as to the quality of workmanship, equipment or material performance, then the final decision regarding acceptability with these Contract Documents shall be that of the Owner.

E. At the request of the Engineer/Architect, promptly provide the services of a competent representative of the manufacturer at the project site, fully equipped and prepared to answer questions, perform tests, make adjustments and to prove compliance with the Contract Documents free of all additional charges. Proof of compliance shall be the responsibility of the Contractor, and such special visits to the project site by the manufacturer shall not be eligible under any cash allowances or stipulated man-hours necessary to startup the system and/or train the Owner as may be specified in the Technical Specifications.

1.3 QUALITY ASSURANCE - EQUIPMENT

A. Erect and install products under the supervision of a competent and experienced superintendent. The method of installation, including anchorage, clearances, and tolerances for rotating assemblies, methods of support for equipment and adjacent piping, shall be as recommended by the equipment manufacturer unless detailed on the Drawings or specified.

B. All material furnished shall be new, and guaranteed free from defects in workmanship, installation, and design.

C. Design and fabricate equipment in conformance with ANSI, ASTM, ASME, ASHRAE, IEEE, NEC and NEMA Standards.

1. Equipment shall withstand the stresses that may occur during fabrication, testing, transportation, installation and conditions of operation.

2. Pumps shall conform to the requirements of the Hydraulic Institute.

3. Equipment shall comply with the latest OSHA regulations and the ANSI Safety Standards.

D. Equipment shall be products of manufacturers who produce evidence of their ability to promptly furnish any and all interchangeable replacement parts as may be needed at any time within the expected life of the equipment.

E. Manufacturers shall also have readily available access to suitable and accurate testing facilities for performing the required shop tests.

PART 2 - PRODUCTS

2.1 MATERIALS AND EQUIPMENT

A. Equipment shall have been in successful regular operation under comparable conditions for a period of at least five (5) years.

1. This time requirement does not apply when the manufacturer posts an Owner/Engineer/Architect acceptable Performance Bond or Letter of Credit for the duration of the time period that will guarantee replacement of the equipment in the event of failure.

2. The bond shall be in a form that is acceptable to the Owner’s legal council.

B. The Owner reserves the right to reject any material or equipment manufacturer who, although he appears to be qualified and meets the technical requirements, does not provide satisfactory evidence indicating adequate and prompt post-installation repair and maintenance service, as required to suit the operational requirements of the Owner.

C. Whenever it is required that the Contractor furnish materials or manufactured articles or shall do work for which no detailed specifications are set forth, the materials or manufactured articles shall be of the best grade in quality and workmanship obtainable on the market from firms of established good reputation, or, if not ordinarily carried in stock, shall conform to the usual standards for first-class materials or articles of the kind required.

D. Perform work in full conformity and harmony with the intent to secure the best standard of construction and equipment of the work as a whole or in part.

E. Items of any one type of material or equipment shall be the product of a single manufacturer.

1. For ease of the Owner in maintaining and obtaining service for equipment and for obtaining spare parts from as few places as possible, to the maximum extent possible, use equipment of a single manufacturer.

2. The Engineer/Architect reserves the right to reject any equipment from various manufacturers if suitable equipment can be secured from fewer manufacturers and to require that source of materials be unified to the maximum extent possible.

F. Substitute equipment shall not be fabricated nor installed until after written decision to accept request is received from the Engineer/Architect.

2.4 FABRICATIONS

A. Insofar as possible, shop prefabricate all items complete and ready for installation.

B. Accurately fabricate all items to the details shown on the Drawings and on the shop drawings found in compliance with the Contract Documents.

PART 3 - EXECUTION

3.1 PREPARATION

A. Prior to work under any Section, carefully inspect the work of all other prime trades and verify that all such work is in conformance with the Contract Documents and is complete to the point where the work under that Section may properly commence.

B. Avoid the need to remove and replace work and to avoid unnecessary cutting and patching.

C. Inspect all surfaces to be sure that they have been properly prepared before applying new work to such surfaces.

D. Verify that all work can be installed in strict accordance with the drawings and the approved shop drawings. Immediately report discrepancies to Engineer/Architect.

E. Do not proceed with the work under any Section until these conditions are obtained.

3.2 INSTALLATION

A. Furnish and install materials and equipment in accordance with the instructions of the applicable manufacturer, fabricator or processors, except as otherwise provided in the Contract Documents.

B. All work shall be done in a workmanlike manner and set to proper lines and grades. The work shall be square, plumb and/or level as the case may be.

C. Where performance criteria are specified, do all work necessary to attain the required end results.

3.3 FIELD QUALITY CONTROL

A. Neither observations by Engineer/Architect nor inspections, tests or approvals by other persons shall relieve the Contractor from his obligations to perform the work in accordance with the requirements of the Contract Documents.

B. If the Contract Documents, laws, ordinances, rules, regulations or orders of any public authority having jurisdiction require any work to specifically be inspected, tested or approved by some public body, the Contractor shall assume full responsibility therefore, pay all costs in connection therewith, and furnish the Engineer/Architect with the required certificates of inspection, testing or approval.

C. The Owner reserves the right to independently perform laboratory tests on random samples of material or performance tests on equipment delivered to the site.

1. These tests, if made, will be conducted in accordance with the appropriate referenced standards or specification requirements.

2. The entire shipment represented by a given sample, samples or piece of equipment may be rejected on the basis of the failure of samples or pieces of equipment to meet specified test requirements.

3. All rejected materials or equipment shall be removed from the site, whether stored or installed in the work, and the required replacements shall be made, all at no additional cost to Owner.

3.4 ADJUST AND CLEAN

A. Upon the completion of installations, and as a condition of its acceptance, visually inspect all work, adjust all components for proper alignment and touch-up abrasions and scratches to make them completely invisible.

B. Thoroughly examine all materials and equipment with protective or decorative finishes for defects and damage prior to being covered.

1. In the case of buried items of work, restore protective surface covers so as to conform to the Contract Documents prior to being backfilled, buried or embedded, as the case may be.

2. In the case of exposed items of work, for which a decorative finish is required, all scratches, discoloration's, unmatched colors, disfigurations and damages shall be repaired and touched-up so as to provide a neat, clean finish, and be uniform in color.

3.5 UNCOVERING WORK

A. Unless otherwise specified or directed by Engineer/Architect, no work shall be covered until it has been observed, tested, photographed, measured, and authorized to be covered by Engineer/Architect.

B. Tie distances to above ground physical structures as reference points to all underground utilities, conduits, pits, manholes, valves, and pipelines shall be obtained by the Contractor prior to covering the work. Immediately comply with the Engineer/Architect's direction to uncover the work if tie distances were not obtained.

C. If any work has been covered with Engineer/Architect's consent and Engineer/Architect considers it necessary or advisable that covered work be observed or tested, the Contractor, at Engineer/Architect's request, shall uncover, expose or otherwise make available for observation, or testing as Engineer/Architect may require, that portion of the work in question, furnishing all necessary labor, material and equipment.

1. If it is found that such work is defective, the Contractor shall bear all the expenses of such uncovering, exposure, observation, and testing of satisfactory reconstruction, including compensation for additional engineering and architectural services and an appropriate deductive change order shall be issued.

2. If, however, such work is not found to be defective, the Contractor shall be allowed an increase in the contract price or an extension of the contract time, or both, directly attributable to such uncovering, exposure, observation, testing and reconstruction if he makes a claim therefore as provided in the General Conditions.

3.6 DEFECTIVE WORK

A. The repair, removal, replacement and correction of defective work is a part of this Contract and shall be promptly performed in accordance with the requirements set forth in the General Conditions or other portions of the Contract Documents. All costs in connection with the correction of defective work shall be borne by the Contractor.

B. Products that fail to maintain the performance or other salient requirements of the Contract Documents, shows undue wear, or other deleterious effects during the maintenance period, shall be considered defective.

END OF SECTION

PART 1 - GENERAL

1.1 SECTION INCLUDES

A. Transportation, handling, storage and protection of products that are to be incorporated into the Work.

B. The procedures for turning equipment over to the Owner for installation by others is also included herein.

1.2 GENERAL

A. Items shall be delivered as complete assemblies direct from the manufacturer with all internal wiring, piping, valving, and control devices intact except where partial disassembly is required by transportation regulations, protection of components, or where physical constraints may exist or be created for the setting of the item.

B. Coordinate the disassembly and reassembly requirements with the manufacturer. Determine the need and extent of reassembly prior to bid.

1. All labor, material and equipment costs associated with the disassembly and reassembly of the product shall be included in the Contract Price.

2. Where reassembly of equipment is necessary, then the manufacturer shall provide reassembly instruction at the project site.

3. A technician shall be present during the entire reassembly procedure and the manufacturer shall certify, in writing, that the unit was reassembled properly in accordance with instructions provided by the manufacturer and that all as-specified warranties remain in effect.

4. The manufacturer's reassembly inspection time shall be in addition to the field service time specified and shall be included in the Contract Price. This time shall not be eligible for payment under any cash allowance item.

C. In the case where equipment is to be installed by others, then the supplying contractor shall be responsible for it's reassembly. If reassembly is necessary and the unit(s) are to be set inside an enclosure or building, reassemble the equipment inside said enclosure. The equipment once reassembled shall be turned over to the installing contractor as specified below.

1.3 PACKING

A. Transport products in containers, crates, boxes or similar means such that the products are protected against damage that may occur during transportation.

B. All parts shall be packaged separately or in container where parts of similar systems are grouped.

C. Part numbers shall be indicated on the individual part. Use indelible ink to mark part numbers.

D. All equipment shipments shall be included with a parts list showing a description (name) of the part and the manufacturer's part number.

1. The parts list shall be shipped in a plastic zippered envelope with the words “Parts List” lettered on it in indelible ink.

2. The parts list shall be placed inside the shipping container so that it is on the top of the contents.

E. Equipment shall be shipped with storage, handling and installation instructions.

1. The Engineer/Architect reserves the right to withhold payment for equipment delivered to the site until such time as the storage, handling and installation instructions are supplied by the manufacturer.

2. In the case where operation and maintenance manuals have been provided by the manufacturer, which includes the installation instructions, then the installation instructions shall also be included with the equipment shipment.

F. Delicate instruments and devices, reagents, chemicals, and glassware shall be shipped in packaging normally provided by the manufacturer.

G. The Contractor shall require the manufacturer to be responsible for the proper packing of all products.

1.4 SHIPPING AND DELIVERY

A. Product deliveries shall be accompanied with a bill of lading indicating the place of origination and the Contractor’s purchase order number.

B. Inspect shipments immediately upon delivery, to assure compliance with requirements of the Contract Documents and those products are undamaged.

C. Promptly remove damaged material and unsuitable items from the job site.

D. Provide equipment and personnel to handle products by methods to prevent soiling; disfigurement or damage.

1.5 STORAGE

A. Store sensitive products and all spare parts in weather tight, climate controlled enclosures in an environment favorable to product.

B. Store and protect products in accordance with the manufacturer’s instructions.

C. All other products that are to be installed underground or products such as pipe, valves, and fittings shall be stored outdoors but shall be blocked off the ground and covered with impervious sheet coverings.

D. Store fabricated products above the ground on blocking or skids.

E. Store loose granular materials in well-drained areas on solid surfaces to prevent mixing with foreign matter.

F. Provide adequate ventilation to avoid condensation.

G. In accordance with manufacturer's instructions protect bearings, couplings, shafts, rotating components, and assemblies. Protection of said equipment shall be continuous until the time the equipment is placed into permanent service.

H. Arrange storage in a manner to provide easy access for inspection. Make periodic inspections of stored products to assure that products are maintained under specified conditions, and free from damage or deterioration.

I. Do not store volatile liquids in any building on site.

J. Storage of products shall be the responsibility of the supplying contractor. The installing contractor shall take all necessary precautions to protect the equipment being furnished by others.

K. Store with seals and labels intact and legible.

1.6 PROTECTION OF WORK

A. Protect the installed work. All costs for protection shall be borne by the Contractor. Provide coverings as necessary to protect installed products from damage, from traffic and subsequent construction operations. Remove when no longer needed.

B. Cover and protect equipment from dust, moisture or physical damage. Protect finished surfaces. Maintain finished surfaces clean, unmarred and suitably protected until accepted by the Owner.

C. Additional time required to secure replacements and to make repairs will not be considered by the Engineer/Architect to justify any extension in the Contract Time of Completion. In the event of the damage, promptly make replacement and repairs to the approval of the Engineer/Architect at no additional costs.

PART 2 - PRODUCTS

Not Used

PART 3 - EXECUTION

Not Used

END OF SECTION

PART 1 - GENERAL

1.1 SECTION INCLUDES

A. Cleaning during the progress of the work

B. Cleaning prior to final payment

1.2 SCHEDULING

A. Sequence, schedule, and coordinate final cleaning work.

B. Perform final cleaning at least five (5) days before the date set for ceremonies to dedicate the new facility wherein the Owner will provide tours to the general public and / or dignitaries. The site shall be clean, organized, and totally free of construction debris, tools, and equipment.

PART 2 - PRODUCTS

2.1 MATERIALS

A. Cleaning materials shall be appropriate to the surface and materials being cleaned.

B. Provide pads to protect finished surfaces from cleaning materials.

PART 3 - EXECUTION

3.1 PROGRESS CLEANING

A. Keep all areas where work is being performed under the Contract free from unattended combustible materials.

B. Remove rust spots as they develop.

3.3 FINAL CLEANING

A. Remove dust, dirt, grease, stains, paint drips and runs, plastic, labels, tape, glue, rope, and other foreign materials from visible interior and exterior surfaces.

B. Do not move dust from spot to spot. Remove directly from the surface on which it lies by the most effective mean such as appropriately treated dusting cloths or vacuum tools. When doing high cleaning, do not allow dust to fall from high areas onto furniture and equipment below.

C. Dismantle and remove all temporary structures, scaffolding, fencing, and equipment. Remove waste materials, rubbish, lumber, block, tools, machinery, and surplus materials.

D. Perform the following prior to final payment:

1. Broom clean all exterior concrete surfaces.

2. Clean all paved roads, lots and drives which were paved as work under this Contract and all existing paved surfaces using a mechanical street cleaner.

3. Repair or repaint damaged pavement markings.

4. Rake clean landscaped surfaces. Final mow all areas grassed and sodded during the work.

5. Thoroughly clean all pits, galleries, manholes, pipes, channels, tanks, wells and all structures entered upon and/or impacted during construction activities as directed by Owner and/or Engineer.

END OF SECTION

PART 1 - GENERAL

1.1 SUMMARY

A. Testing of piping.

B. Testing of tanks vented to atmosphere.

C. Pipe leakage testing shall comply with the conditions noted in the Schedule.

1.2 DEFINITIONS

A. Leakage (or exfiltration) - The quantity of water to be supplied into the newly laid pipe, any valve section thereof, manhole, or other appurtenance, necessary to maintain the specified leakage test pressure after the pipe has been filled with water and the air expelled.

B. Infiltration - The quantity of water that enters into any pipe, manhole, or other appurtenance when the static groundwater elevation is at the maximum elevation above the pipe or appurtenance as specified hereinafter.

1.3 QUALITY ASSURANCE

A. Prior to Substantial Completion, pressure pipes and non-pressure pipes shall meet specific leakage requirements. These leakage requirements shall be satisfied by the basic materials alone. Where joint fillers and the like have been specified, primarily to protect jointing materials, and secondarily to provide a factor of safety, they shall not be applied until after leakage tests have been completed and have been accepted by Engineer/Architect.

B. Engineer/Architect will witness tests. Tests not witnessed will be considered as not having been performed.

C. Do not close or cover up work until it has been observed for proper and satisfactory construction and installation in compliance with the Contract Documents. Should incomplete or unacceptable work be covered, the Contractor shall, at his/her own expense, uncover all work so that it may be properly observed. After such observations, repair and replace the work that was found defective, unsatisfactory, and not in accordance with the Contract Documents. After such repair and replacement, bring all work to completeness and status as it was before it was closed and covered, all at the Contractor's own expense. Submit for review and approval proposed corrective action to correct failed systems.

D. Successful completion of required tests shall be in no way interpreted as relieving the Contractor of responsibility for defects that become apparent subsequent to the time of testing. It shall be the sole right of the Engineer/Architect to determine whether defects exist. Retest all portions of the work deemed necessary by the Engineer/Architect prior to Substantial Completion.

1.4 SUBMITTALS

A. Submit under provisions of Section 013300.

B. Provide details and specifications on testing apparatus.

C. Provide certified test results on forms approved by the Engineer/Architect.

1.5 SEQUENCING AND SCHEDULING

A. Notify Engineer/Architect and governing agencies, if necessary, at least 48 hours in advance of a scheduled test so that the test may be witnessed.

B. Test underground pipe prior to backfilling.

C. At Engineer/Architect's discretion, additional sections of pipelines may be required to be tested as soon as pipe is laid and prior to backfilling when working conditions or the standard of workmanship have been altered.

PART 2 - PRODUCTS

2.1 TESTING APPARATUS

A. Provide labor, plugs, measuring equipment, and other apparatus, complete, to perform testing.

B. Provide clean water, air, nitrogen, and other materials as required to accomplish testing.

C. Provide plugs and caps capable of withstanding test pressures.

D. Provide temporary flanges, plugs, bulkheads, thrust blocks, weighing, bracing and other items necessary to prevent joints from separating, and to prevent injuries or damage.

PART 3 - EXECUTION

3.1 PREPARATION

A. Plug open ends, adequately block bends, tees, ends, and other fittings, and do whatever is necessary to brace piping system so that it will safely withstand the pressures developed under the tests and so that no damage or injury shall occur to the pipeline, people or property.

B. Before tests are conducted, isolate, or remove any regulator, gauge, trap, or other apparatus or equipment that may be damaged by test pressures.

3.2 GENERAL

A. Trapped Air: Trapped air may cause a false indication of the rate of leakage. Points of concern include ends of lines, stubs, house connections and high points in pipelines. No credit will be made for this condition and no adjustment will be made to the allowable leakage. When trapped air is suspected of causing a test failure, do whatever is necessary to evacuate the air and repeat tests until the actual leakage is equal to or less than allowable rate of leakage.

B. Water Absorption: No credit will be given for absorption of water in pipe and manhole walls. If necessary, fill pipes and manholes with water well in advance of testing and allow them to soak in order to eliminate or minimize the effects of absorption.

3.3 TESTS FOR NON-PRESSURE PIPING

A. General:

1. Leakage shall be determined by exfiltration testing. The Engineer/Architect reserves the right to also require infiltration testing.

2. Air testing is not permitted.

3. Leakage testing shall include the main non-pressure pipe, house connections, and appurtenances on the section of pipeline being tested.

4. Limit pipeline test sections to runs between adjacent structures. Manholes may be tested simultaneously with pipes.

5. Adequately plug ends of house connections, stubs, and openings from which water may escape.

6. Use clean water for exfiltration tests.

7. Determine groundwater levels by installing piezometers, test holes or test pits at intervals not to exceed 1,000 feet.

B. Pipe Exfiltration Test:

1. The minimum water level required for testing is 4 feet above the crown of the upstream (highest) end of the pipe being tested or 2 feet above the maximum groundwater level along the test section, whichever is greater.

2. Install a watertight plug in the downstream end of the manhole pipe.

3. Fill upstream manhole with water and conduct test for six (6) hours.

4. Upon satisfactorily completing the test, remove the downstream plug in the presence of Engineer/Architect. Do not touch nor remove anything until approved by Engineer/Architect.

5. Maximum allowable exfiltration is one hundred (100) gallons per inch diameter per mile per day.

C. Pipe Infiltration Test:

1. The minimum head of groundwater required for infiltration testing is 2 feet above the crown of the pipe at the upstream end but must in all cases reach its normal level.

2. Infiltration may be measured with an approved graduated container capable of intercepting all inflow, by a pipeline V-notch weir, or by other approved methods. When using instream type measuring devices, do not measure flows until steady state conditions are established.

3. Maximum allowable infiltration is one hundred (100) gallons per inch diameter per day per mile of pipe.

4. Where groundwater level is at least 2 feet above the highest manhole joint, manholes may be included in the test. No visible leakage will be permitted in manholes.

3.4 TESTS FOR PRESSURE PIPES

A. Leakage testing shall include the main exiting pipe, service connections, and other appurtenances on the section of pipeline being tested.

B. Test pipes prior to applying insulation and before they are concealed or furred-in.

C. Provide all necessary gauges. Gauges shall be standard pressure type with a minimum 6-inch diameter dial and a pressure range not in excess of 150% of the maximum required test pressure.

D. Provide and maintain at the site a gauge stands with an approved laboratory calibrated test gauge. Periodically check test gauge used for testing against the test gauge, and whenever requested by Engineer/Architect.

E. Where it is necessary for testing, tap pipes and insert approved plugs after testing is completed.

F. Provide a hand or motor driven compressor to maintain the required test pressure constant throughout the duration of the test. If a water pump is used, pump water from a container with a known volume of water. If an air or inert gas pump is used, leakage shall be determined and calculated by the cycling of the pump.

G. Provide test gauges at each end of the line being tested.

H. Conduct leakage test in accordance with the requirements contained in the Schedule.

3.5 ALLOWABLE LEAKAGE

A. The maximum allowable leakage for the various piping systems is presented in the schedule.

B. It is the intent of this Contract to secure piping systems without leakage.

1. Each section of pipe and within each structure shall not exceed the allowable leakage.

2. It is also the intent to secure a piping system free from visible drips, streams and leaks. Therefore, even if a portion of the system meets the requirements for allowable leakage, visible leaks are not permitted and shall be repaired.

C. Leakage tests will be considered satisfactorily passed when the rate of leakage is equal to or less than the stipulated allowances, there is no evidence of visible leaks, and there is no evidence of other system defects.

3.6 TEST FOR TANKS VENTED TO ATMOSPHERE

A. Prior to testing liquid holding tanks open to the atmosphere, backfill to finished grade. Piping and equipment within the tank that might affect the water tightness of the tank shall be completely installed and operable.

B. Isolate each individual tank for testing.

1. Fill with clean, potable water to the maximum operating level.

2. After a suitable stabilization period, the maximum operating level shall be reestablished and a twenty-four (24) hour leakage test shall be performed.

3. During the test, no water shall be added to or taken from the tank. The drop in the water level shall be recorded at the end of the period.

4. The allowable loss is no more than1/4-inch per eight hours.

5. Leaks shall be repaired by methods and materials approved by the Engineer/Architect prior to the start of the corrective action.

6. Leakage shall be corrected prior to the performance of equipment testing.

7. During the testing of each individual tank, as outlined in this paragraph, all immediately adjacent tanks shall be empty of water.

C. After each individual tank has passed the leakage test, all tanks within each complex shall be filled with water to the normal operation level to check complex structural integrity and the hydraulics of operation.

3.7 RETESTING

A. Pipes, tanks and manholes not passing the tests shall have all defects corrected with methods approved by the Engineer/Architect to the inspection and satisfaction of Engineer/Architect, and shall be retested and re-corrected as often as is necessary until the test requirements have been met.

B. It is the intent of this Contract to obtain work meeting test requirements on their own and solely through the use of the normal integral sealing components.

1. Joint leaks shall not be stopped using concrete, caulking, mortar, or other patching materials.

2. Leaking pipe joints shall be re-jointed and leaking manhole joints shall have joints reset, or replaced if necessary.

C. Methods other than rejoining, resetting or replacing joint seals shall require the written approval of Engineer/Architect.

3.8 SCHEDULE

LEAKAGE TESTING REQUIREMENTS

SERVICE	FLUID	PRESSURE	DURATION (Hrs.)	ALLOWABLE LEAKAGE (Note 1)		
				UNDERGROUND		EXPOSED
				Infil.	Exfil.	
Non-Pressure Piping	Water	*4ft.*	6	100	100	**None**
Pressure Piping	Water	**(Note 2)**	**(Note 2)**	0	0	0

SCHEDULE NOTES:

1. Maximum allowable leakage in gallons/day/inch diameter/mile of pipe, or gallons/day/inch diameter/mile for manholes. Where a percentage is shown, the loss shall not exceed the percentage of the starting test pressure.

2. Maintain 100 psi or two times operating pressure, whichever is greater, for 2 hours.

END OF SECTION

PART 1 - GENERAL

1.1 SUBMITTALS

A. Submit the following documents to the Engineer/Architect before Substantial Completion:

1. Project Record Documents as specified in Section 017839.

2. If the manufacturer is taking exception to the installation or if the warranty is voided, he shall provide a statement to that effect and provide reasons and justification to explain the company's position.

3. One binder containing original counterparts of all warranties, guarantees, bonds, or affidavits as specified in the Technical Specification Sections. These documents shall contain the original signatures and be placed in a plastic sheet protector, one document per protector.

4. Spare parts checklist itemizing all spare parts furnished under the Contract summarized by Section.

5. Electrical Underwriter's Certificate where the contract includes electrical construction.

B. Submit the following items to the Engineer/Architect with the final application for payment:

1. Final Payment approved by the Engineer/Architect for Contractor's execution showing final amount of Contract including change orders.

2. Maintenance Bond prepared in accordance with the Contract or General Conditions.

3. Utility company signoffs and inspection approvals, if applicable.

4. Federal, state, county, town and local signoffs and inspection approvals, where applicable.

C. All documents shall be complete, signed, dated, and notarized (where applicable) and be subject to the Engineer/Architect's acknowledgment of receipt or approval.

PART 2 - PRODUCTS

Not Used

PART 3 - EXECUTION

Not Used

END OF SECTION

PART 1 - GENERAL

1.1 SECTION INCLUDES

A. Maintenance of documents

B. Recording of record information

C. Submission of record documents

D. Underground pipeline documentation.

1.2 PLANS AND SPECIFICATIONS FURNISHED TO THE CONTRACTOR

A. A CD containing a complete set of Contract Documents (plans, specifications and addenda) in PDF format will be furnished to the Contractor.

1.3 MAINTENANCE OF DOCUMENTS

A. Maintain at the site one (1) set of the following: drawings, specifications, addenda, change orders, approved shop drawings, test reports, operations and maintenance manuals, and shop drawing log.

B. Make these documents available for use by the Owner, Engineer/Architect, regulatory agencies and other parties designated by the Owner.

C. Maintain these documents in a clean, dry, legible condition throughout the entire contract period.

1.4 RECORDING OF RECORD INFORMATION

A. Affix a stamp to each Contract Drawing and Shop Drawing reading as follows: “RECORD DOCUMENT" - “NAME OF PROJECT” - “CONTRACTOR NAME” in 2-inch high printed letters. The stamp shall be specifically prepared for this project.

B. Keep the record documents current as the work progresses. Record information concurrent with construction progress.

C. Include a lump sum of $3,000 in the bid amount for preparation of record drawings.

1. Stipulated amount will be released when the record drawings have been accepted by the Engineer/Architect.

2. Satisfactory evidence shall be provided by the Contractor demonstrating compliance with these specifications and said drawings have been delivered and deemed in compliance with the specifications by the Engineer/Architect.

3. Progress payments will be allowed against the line item in the Schedule of Values only if record documents are considered accurate and up-to-date by the Engineer/Architect.

D. Do not permanently conceal any work until required information has been recorded.

1. Legibly mark the Contract Plans to record actual construction, including, but not limited to the following:

2. All as-built work.

3. All approved field changes and conditions.

4. Horizontal and vertical location of underground utilities and appurtenances referenced to permanent surface improvements.

5. Location of underground conduits, boxes, devices. Wire sizes (AWG) and types installed. Number of active and spare wires in each conduit and conduit size (applicable where work involves electrical construction).

6. Tied-down location of all underground process lines and buried valves.

E. Shop Drawings: Maintain as record documents. Legibly mark-up to show changes made due to field conditions encountered during construction.

1.5 PROJECT RECORD DOCUMENTS

A. Maintain a complete and accurate log of control and survey work as it progresses.

1.6 SUBMITTAL OF RECORD DOCUMENTS

A. At Substantial Completion, deliver one (1) preliminary record set of as-built documents to the Engineer with all changes conspicuously ballooned or otherwise emphasized.

B. The work will not be considered substantially complete until such time as the preliminary record documents are delivered and acceptable to the Engineer. Mark this set “Preliminary Record Drawings”.

C. Prior to Final Completion, conform the preliminary record drawings to the comments made by the Engineer and then provide the Owner a complete reproducible set of as-built drawings on a CD in DWG format.

D. As-built drawings shall be the same size as the Contract Drawings, with 1/2-inch margins space on three sides and a 2-inch margin on the left side for binding.

E. Each drawing shall bear in the title box the words “FINAL RECORD DRAWINGS” and the name of the Contractor in heavy black lettering 1/2 inch high and be certified as complete and accurate.

F. As a convenience, Engineer will make available to the Contractor electronic media of the Contract Drawings for the sole purpose of the Contractor preparing as-built drawings.

G. Electronic media made available is without guarantee of compatibility with the Contractor’s software or hardware.

1. If the Contractor wishes to take advantage of this offer, the Contractor will be required to execute an indemnification and hold harmless agreement with the Engineer. Electronic media will be provided free of charge on disc in a zipped format.

2. Electronic media shall be returned to the Engineer upon acceptance of the as-built drawings by the Owner.

1.7 RELATED DOCUMENTS

A. Provide certificate of release of liens if requested by the Engineer/Architect.

1.8 UNDERGROUND PIPELINE DOCUMENTATION

A. Document the location of all underground pipelines by taking digital photographs of the installed pipelines prior to backfilling. At least 3 digital photographs shall be taken of each pipe section before it has been backfilled.

B. Provide each pipe installation crew with a digital camera capable of an 8 mega-pixel quality picture using Smart Media, Compact Flash Media, or Memory Stick cards as the media within the camera.

C. The foreman shall submit photographs of the pipe that has been installed via Newforma® within three (3) working days of taking photograph in accordance with the requirements of Section 013300.

D. Installed work will not be eligible for payment until documentation is provided.

E. In addition, the underground piping shall be marked with construction grade spray paint before the photos have been taken to indicate the pipelines in the pictures.

1. The Contractor shall assign a separate paint color to each line to be shown in the picture.

2. The paint color, once selected by the Contractor, shall be used for the entire run of piping.

3. The marks shall be large and long enough to be visible in the picture. Where practical, spray paint the name of the contents that will be conveyed in the pipe, e.g. “THICK. SLUDGE”, “SBR EFFL.”.

4. This requirement is necessary so that the pipe lines shown in the pictures can be easily named and referenced at a later date.

PART 2 - PRODUCTS

Not Used

PART 3 - EXECUTION

Not Used

END OF SECTION

PART 1 - GENERAL

1.1 SECTION INCLUDES

A. Retain an independent utility locator service company with a minimum of five (5) years of experience to field locate, mark, and stakeout existing underground utilities and service connections. The company shall be equipped with the latest state-of-the-art equipment.

B. If required, determine the exact location of utilities by hand excavated test pits or through vacuum methods. Support and protect all utilities to remain in place.

C. field locate, mark, and stakeout underground utilities prior to excavation.

D. Use different colored markers for each separate utility run. Immediately take digital photographs to document the mapped utilities and provide same to the Engineer.

E. Contractor shall be responsible for the location of all utilities within areas of excavation, and all costs associated with the repair of utilities hit/damaged during construction.

1.2 TEST HOLES

A. Test holes shall be performed by air vacuum excavation key-hole technology or other non-destructive techniques on existing utilities. One call notification and permit applications shall be made prior to test hole excavation as necessary.

B. The test holes shall be staked at the site by contractor personnel utilizing a tape or survey instrument as deemed necessary. Test hole openings shall be a minimum 8” x 8” and typically not larger than 12” x 12”. Excavate to expose the utility in a careful manner with the utmost concern for the safety of personnel, the public and surrounding property. Complete a field test hole form for each excavation that indicates at a minimum parameters required by the ASCE/CI Standard 38-02, which includes: depth to the utility, outside diameter, height of conduits or encasement, utility material, pavement type/ thickness and general soil type.

C. Place permanent marker over a reference point on the utility flush with grade. Typically this reference point is the centerline of pipes or the edge of concrete structures. A minimum of three (3) ties shall be taken to the permanent marker. The depth to the reference point on the utility shall also be measured plumb to the permanent marker.

D. Backfill excavation utilizing excavated materials or a self-compacting aggregate. Pavement restoration shall be made as per temporary pavement requirement on the Contract Drawings.

E. Test hole permanent markers shall be located using conventional or GPS survey equipment. The test hole markers shall be directly located to provide horizontal and vertical coordinates for the locations relative to the project coordinate system.

F. Do not backfill test holes until directed by the Engineer. Photographs of exposed piping shall be taken by the Contractor and kept on file for the duration of the project. Duplicate prints shall be provided to the Engineer. Annotate on the back of each print the location of the photograph, the name of the exposed line, and the date it was taken. All photographs shall be taken using a digital camera. The digital file shall be provided to the Engineer. All prints shall be 4 inches by 6 inches. Trenching for new buried pipelines shall not be started until the locations of existing pipes and utilities are verified.

1.3 SUBMITTALS

A. Submit detailed experience and qualifications description of underground utility locator service. Experience and qualifications package should include a description of the types of utility locator equipment and experience that can be provided.

B. At the conclusion of this project, provide three (3) sets of paper and one (1) copy of electronic plans documenting all utilities located and identified. All documentation shall be referenced to existing data (horizontal and vertical) previously established.

1.4 COORDINATION AND SCHEDULING

A. General Location: Within areas of excavations all utilities shall be field located and their locations marked at least one (1) day prior to the performance of the required excavation.

B. The performance of hand excavated test pits or vacuum excavations to determine the utilities exact location shall be performed just prior to performing the work to minimize the time that excavated areas will be exposed to erosive conditions.

C. Coordinate work with the Engineer to minimize utility disruptions and facility operations. The Engineer shall be notified at least three (3) working days prior to performing the work, and should be provided a schedule for the works progression

PART 2 - PRODUCTS

Not Used

PART 3 - EXECUTION

3.1 FIELD QUALITY CONTROL

A. The Engineer may limit or restrict scheduling of the utility locator service based upon project progress.

END OF SECTION

PART 1 - GENERAL

1.1 SUMMARY

A. Section Includes:

1. Demolition and removal of structures and site improvements.
2. Abandoning in-place below-grade construction.
3. Disconnecting, capping or sealing, and abandoning in-place site utilities.
4. Salvaging items for reuse by Owner.

B. Related Sections:

1. Section 011000 - Summary of Work - use of the premises and phasing requirements.
2. Section 013233 - Construction Photographs - preconstruction photographs taken before building demolition.

1.2 DEFINITIONS

A. Demolish: Detach items from existing construction and legally dispose of them off-site unless indicated to be removed and salvaged.

B. Recycle: Recovery of demolition waste for subsequent processing in preparation for reuse.

C. Salvage: Carefully detach from existing construction, in a manner to prevent damage, and deliver to Owner. Include fasteners or brackets needed for reattachment elsewhere.

1.3 MATERIALS OWNERSHIP

A. Unless otherwise indicated, demolition waste becomes property of Contractor.

1.4 SUBMITTALS

A. Proposed Protection Measures: Submit informational report, including Drawings, that indicates the measures proposed for protecting individuals and property, for environmental protection, for dust control and, for noise control. Indicate proposed locations and construction of barriers.

B. Pre-Demolition Photographs: Show existing conditions of adjoining construction and site improvements, including finish surfaces, which might be misconstrued as damage caused by demolition operations. Comply with Section 013233 "Photographic Documentation." Submit before the Work begins.

1.5 QUALITY ASSURANCE

A. Regulatory Requirements: Comply with governing EPA notification regulations before beginning demolition. Comply with hauling and disposal regulations of authorities having jurisdiction.

B. Standards: Comply with ANSI/ASSE A10.6 and NFPA 241.

C. Pre-Demolition Conference: Conduct conference at Project site to comply with requirements in Division 01 Section "Project Management and Coordination". Review methods and procedures related to building demolition including, but not limited to, the following:

1. Inspect and discuss condition of construction to be demolished.

2. Review structural load limitations of existing structures.

3. Review and finalize building demolition schedule and verify availability of demolition personnel, equipment, and facilities needed to make progress and avoid delays.

4. Review and finalize protection requirements.

5. Review procedures for noise control and dust control.

6. Review procedures for protection of adjacent buildings.

7. Review items to be salvaged and returned to Owner.

1.6 PROJECT CONDITIONS

A. Structures to be demolished will be vacated and their use discontinued before start of the Work.

B. Buildings immediately adjacent to demolition area will be occupied. Conduct demolition so operations of occupied buildings will not be disrupted.

1. Provide not less than 72 hours notice of activities that will affect operations of adjacent occupied buildings.

2. Maintain access to existing walkways, exits, and other facilities used by occupants of adjacent buildings.

a. Do not close or obstruct walkways, exits, or other facilities used by occupants of adjacent buildings without written permission from authorities having jurisdiction.

C. Owner assumes no responsibility for structures to be demolished.

D. Hazardous Materials: It is not expected that hazardous materials will be encountered in the Work.

1. Hazardous materials will be removed by Owner before start of the Work.

2. If materials suspected of containing hazardous materials are encountered, do not disturb; immediately notify Engineer and Owner. Hazardous materials will be removed by Owner under a separate contract.

E. On-site storage or sale of removed items or materials is not permitted.

1.7 COORDINATION

A. Arrange demolition schedule so as not to interfere with operations of adjacent occupied buildings.

PART 2 - PRODUCTS

2.1 SOIL MATERIALS

A. Satisfactory Soils: Comply with requirements in Section 312316.13 “Trenching and Backfilling."

PART 3 - EXECUTION

3.1 EXAMINATION

A. Verify that utilities have been disconnected and capped before starting demolition operations.

B. Inventory and record the condition of items to be removed and salvaged. Provide photographs of conditions that might be misconstrued as damage caused by salvage operations. Comply with Section 013233 "Construction Photographs."

3.2 PREPARATION

A. Existing Utilities: Locate, identify, disconnect, and seal or cap off indicated utilities serving buildings and structures to be demolished.

1. Arrange to shut off indicated utilities with utility companies.

2. If removal, relocation, or abandonment of utility services will affect adjacent occupied buildings, then provide temporary utilities that bypass buildings and structures to be demolished and that maintain continuity of service to other buildings and structures.

3. Cut off pipe or conduit a minimum of 24 inches below grade. Cap, valve, or plug and seal remaining portion of pipe or conduit after bypassing according to requirements of authorities having jurisdiction.

B. Do not start demolition work until utility disconnecting and sealing have been completed and verified in writing.

C. Temporary Shoring: Provide and maintain interior and exterior shoring, bracing, or structural support to preserve stability and prevent unexpected movement or collapse of construction being demolished.

1. Strengthen or add new supports when required during progress of demolition.

3.3 PROTECTION

A. Existing Facilities: Protect adjacent walkways, loading docks, building entries, and other building facilities during demolition operations. Maintain exits from existing buildings.

B. Existing Utilities: Maintain utility services to remain and protect from damage during demolition operations.

1. Do not interrupt existing utilities serving adjacent occupied or operating facilities unless authorized in writing by Owner and authorities having jurisdiction.

2. Provide temporary services during interruptions to existing utilities, as acceptable to Owner and authorities having jurisdiction.

   a. Provide at least 72 hours' notice to occupants of affected buildings if shutdown of service is required during changeover.

C. Temporary Protection: Erect temporary protection, such as walks, fences, railings, canopies, and covered passageways, where required by authorities having jurisdiction and as indicated. Comply with requirements in Section 015000 "Temporary Facilities and Controls."

1. Protect adjacent buildings and facilities from damage due to demolition activities.

2. Protect existing site improvements, appurtenances, and landscaping to remain.

3. Provide temporary barricades and other protection required to prevent injury to people and damage to adjacent buildings and facilities to remain.

4. Remove temporary barriers and protections where hazards no longer exist. Where open excavations or other hazardous conditions remain, leave temporary barriers and protections in place.

3.4 DEMOLITION, GENERAL

A. General: Demolish indicated structures and site improvements completely. Use methods required to complete the Work within limitations of governing regulations and as follows:

B. Site Access and Temporary Controls: Conduct building demolition and debris-removal operations to ensure minimum interference with roads, streets, walks, walkways, and other adjacent occupied and used facilities.

1. Do not close or obstruct streets, walks, walkways, or other adjacent occupied or used facilities without permission from Owner and authorities having jurisdiction. Provide alternate routes around closed or obstructed traffic ways if required by authorities having jurisdiction.

2. Use water mist and other suitable methods to limit spread of dust and dirt. Comply with governing environmental-protection regulations. Do not use water when it may damage adjacent construction or create hazardous or objectionable conditions, such as ice, flooding, and pollution.

C. Explosives: Use of explosives is not permitted.

3.5 DEMOLITION BY MECHANICAL MEANS

A. Salvage: Items to be removed and salvaged are indicated on Drawings.

B. Existing Utilities: Demolish existing utilities and below-grade utility structures as indicated on Drawings.

C. Fill abandoned utility structures with Type B pea gravel and cover with filter fabric at sub grade of roadway.

1. Piping: Disconnect piping at unions, flanges, valves, or fittings.

3.6 SITE RESTORATION

A. Site Grading: Uniformly rough grade area of demolished construction to a smooth surface, free from irregular surface changes. Provide a smooth transition between adjacent existing grades and new grades.

3.7 REPAIRS

A. Promptly repair damage to adjacent buildings caused by demolition operations.

3.8 DISPOSAL OF DEMOLISHED MATERIALS

A. Remove demolition waste materials from Project site.

1. Do not allow demolished materials to accumulate on-site.

2. Remove and transport debris in a manner that will prevent spillage on adjacent surfaces and areas.

B. Do not burn demolished materials.

3.9 CLEANING

A. Clean adjacent structures and improvements of dust, dirt, and debris caused by building demolition operations. Return adjacent areas to condition existing before building demolition operations began.

1. Clean roadways of debris caused by debris transport.

END OF SECTION

PART 1 - GENERAL

1.1 SECTION INCLUDES

A. Excavation for slabs-on-grade, paving and landscaping.

B. Excavation for site structures.

C. Site excavation.

1.2 RELATED SECTIONS

A. Section 312316.13 – Trenching and Backfilling

1.3 QUALITY ASSURANCE

A. Do not excavate wet or frozen materials without written approval from the Engineer.

B. Provide safety barricades around open excavations.

1.4 FIELD MEASUREMENTS

A. Verify that survey benchmark and intended elevations for the work are as indicated.

1.5 COORDINATION

A. Coordinate work under provisions of Section 013100.

PART 2 - PRODUCTS

Not Used

PART 3 - EXECUTION

3.1 PREPARATION

A. Identify required lines, levels, contours and datum.

B. Identify known underground, above ground and aerial utilities. Stake and flag locations.

C. Notify utility company to remove or relocate utilities, if required.

D. Protect above and below grade utilities which are to remain.

E. Protect plant life, lawns and other features remaining as a portion of final landscaping.

F. Protect bench marks, existing structures, fences, sidewalks, paving and curbs from excavation equipment and vehicular traffic.

G. Notify the Engineer prior to commencement of excavation.

3.2 EXCAVATION

A. Underpin adjacent structures that may be damaged by excavation work, including utilities and pipe chases.

B. Excavate subsoil required to accommodate landscaping and construction operations to the limits as indicated on the plans.

C. Machine slope banks to angle of repose or less, until shored.

D. Grade top perimeter of excavation to prevent surface water from draining into excavation.

E. Hand trim excavation. Remove loose matter.

F. Remove lumped subsoil, boulders, and rock.

G. Notify Engineer of unexpected subsurface conditions and discontinue affected work in area until notified to resume work.

H. Correct unauthorized excavation at no extra cost to Owner in accordance with Section 312316.13.

I. Stockpile excavated material in area designated on site and remove excess material not being reused from site.

3.3 FIELD QUALITY CONTROL

A. Provide for visual Perform field inspection and testing under provisions of Section 014500.

B. Inspection of bearing surfaces.

3.4 PROTECTION

A. Protect work under provisions of Section 015000.

B. Protect excavations by methods required to prevent cave-in or loose soil from falling into excavation.

C. Protect bottom of excavations and soil adjacent to and beneath foundation from freezing.

END OF SECTION

PART 1 - GENERAL

1.1 SECTION INCLUDES:

1. Preparing subgrades for slabs-on-grade walks and pavements.
2. Excavating and backfilling for structures.
3. Subbase course for concrete walks and pavement.
4. Subbase course and base course for asphalt paving.
5. Excavating and backfilling trenches for utilities and pits for buried utility structures.

1.2 RELATED SECTIONS:

1. Section 013233 - Construction Photographs - recording pre-excavation and earth moving progress
2. Section 015000 - Temporary Facilities and Controls - temporary controls, utilities, and support facilities; also for temporary site fencing if not in another Section
3. Section 315000 - Excavation Support and Protection - shoring, bracing, and sheet piling of excavations

1.3 SUBMITTALS

A. Qualification Data: For qualified testing agency.

B. Material Test Reports: For each on-site and borrow soil material proposed for fill and backfill as follows:

1. Classification according to ASTM D 2487.
2. Laboratory compaction curve according to ASTM D 698.

C. Preexcavation Photographs or Videotape: Show existing conditions of adjoining construction and site improvements, including finish surfaces,that might be misconstrued as damage caused by earth moving operations. Submit before earth moving begins.

1.4 QUALITY ASSURANCE

A. Geotechnical Testing Agency Qualifications: Qualified according to ASTM E 329 and ASTM D 3740 for testing indicated.

B. Pre-excavation Conference: Conduct conference at Project site.

1.5 PROJECT CONDITIONS

A. Traffic: Minimize interference with adjoining roads, streets, walks, and other adjacent occupied or used facilities during earth moving operations.

1. Do not close or obstruct streets, walks, or other adjacent occupied or used facilities without permission from Owner and authorities having jurisdiction.

2. Provide alternate routes around closed or obstructed traffic ways if required by Owner or authorities having jurisdiction.

B. Utility Locator Service: Notify "Call Before You Dig" for area where Project is located before beginning earth moving operations.

C. Do not commence earth moving operations until temporary erosion- and sedimentation-control measures, specified in Division 01 Section "Temporary Facilities and Controls," are in place.

D. Backfill: Wet or frozen material is prohibited.

E. Excavation:

1. Removal of wet or frozen material is prohibited unless directed by the Engineer.

2. Temporary sheeting is required for excavations exceeding a depth of 4 feet (1.2 m).

3. Safety barricades are required around all open excavations.

1.6 FIELD MEASUREMENTS

A. Verify that survey benchmark and elevations for the work are as shown on plans.

1.7 COORDINATION

A. Coordinate and make all arrangements to have the testing laboratory present so that tests can be made. The Engineer may stop trenching operations until such time as the testing laboratory is on-site to make tests or take required samples.

PART 2 - PRODUCTS

2.1 SOIL MATERIALS

A. General: Provide borrow soil materials when sufficient satisfactory soil materials are not available from excavations.

B. Type A Coarse Stone: Angular, washed natural stone; free of shale, clay, friable material, sand, debris; graded in accordance with ANSI/ASTM C136 within the following limits:

Sieve Size	Percent Passing
2-inch (50 mm)	100%
1-inch (25 mm)	95%
3/4-inch (19 mm)	75 - 90%
5/8-inch (16 mm)	35 - 60%

3/8-inch (9.5 mm)	15 - 35%
No. 4 (4.75 mm)	< 5%

C. Type B - Pea Gravel: Natural stone; washed, free of clay, shale, organic matter; graded in accordance with ANSI/ASTM C136, to the following.

1. Minimum Size: 1/4-inch (6.4 mm).

2. Maximum Size: 5/8-inch (16 mm).

D. Type C - Sand: (Structural Fill) Natural river or bank sand; washed, free of silt, clay, loam, friable or soluble materials, or organic matter; graded in accordance with ANSI/ASTM C136, within the following limits:

Sieve Size	Percent Passing
No. 4 (4.75 mm)	100%
No. 14 (1.18 mm)	10 - 100%
No. 50 (0.30 mm)	5 - 90 %
No. 100 (0.15 mm)	4 - 30%
No. 200 (0.075 mm)	0 - 1%

E. Type D - Subsoil: Reused excavated material, graded, free of lumps, rocks and gravel larger than 3 inches (75 mm) in size, debris and contaminants.

F. Type E - ¾ inch Crushed Blue Stone Surfacing: Angular, washed blue stone; free of shale, clay, friable material, sand, and debris.

PART 3 - EXECUTION

3.1 PREPARATION

A. Protect structures, utilities, sidewalks, pavements, and other facilities from damage caused by settlement, lateral movement, undermining, washout, and other hazards created by earth moving operations. Stake and flag underground locations.

B. Notify utility company to remove or relocate utilities, if required.

C. Protect and maintain erosion and sedimentation controls during earth moving operations.

D. Protect subgrades and foundation soils from freezing temperatures and frost. Remove temporary protection before placing subsequent materials.

E. Break through frozen ground from zero to 4 inches in depth.

F. Identify required lines, levels, contours and datum.

G. Verify fill materials to be reused are acceptable.

3.2 EXCAVATION, GENERAL

A. Unclassified Excavation: Excavate to subgrade elevations regardless of the character of surface and subsurface conditions encountered. Unclassified excavated materials may include rock, soil materials, and obstructions.

1. If excavated materials intended for fill and backfill include unsatisfactory soil materials and rock, replace with satisfactory soil materials.

3.3 EXCAVATION FOR UTILITY TRENCHES

A. Excavate trenches to indicated gradients, lines, depths, and elevations.

1. Beyond building perimeter, excavate trenches to allow installation of top of pipe below frost line.

B. Excavate trenches to uniform widths to provide the following clearance on each side of pipe or conduit. Excavate trench walls vertically from trench bottom to 12 inches higher than top of pipe or conduit unless otherwise indicated.

1. Clearance: As indicated.

C. Trench Bottoms: Excavate and shape trench bottoms to provide uniform bearing and support of pipes and conduit. Shape subgrade to provide continuous support for bells, joints, and barrels of pipes and for joints, fittings, and bodies of conduits. Remove projecting stones and sharp objects along trench subgrade.

3.4 SUBGRADE INSPECTION

A. Notify Engineer when excavations have reached required subgrade.

B. If Engineer determines that unsatisfactory soil is present, continue excavation and replace with compacted backfill or fill material as directed.

C. Authorized additional excavation and replacement material will be paid for according to Contract provisions for changes in the Work.

D. Reconstruct subgrades damaged by freezing temperatures, frost, rain, accumulated water, or construction activities, as directed by Engineer, without additional compensation.

3.5 STORAGE OF SOIL MATERIALS

A. Stockpile borrow soil materials and excavated satisfactory soil materials without intermixing. Place, grade, and shape stockpiles to drain surface water. Cover to prevent windblown dust.

1. Stockpile soil materials away from edge of excavations. Do not store within drip line of remaining trees.

2. Limit stockpile height to 8 feet at all times.

B. All suitable excavated material shall be utilized for backfill or embankment. Stockpile on-site or transport suitable material off site and bring back when conditions allow the stockpiling or filling operations to begin.

3.6 BACKFILL

A. Place and compact backfill in excavations promptly, but not before completing the following:

1. Construction below finish grade.

2. Surveying locations of underground utilities for Record Documents.

3. Testing and inspecting underground utilities.

4. Removing concrete formwork.

5. Removing trash and debris.

6. Removing temporary shoring and bracing, and sheeting.

7. Installing permanent or temporary horizontal bracing on horizontally supported walls.

B. Place backfill on subgrades free of mud, frost, snow, or ice.

3.7 UTILITY TRENCH BACKFILL

A. Place backfill on subgrades free of mud, frost, snow, or ice.

B. Place and compact bedding course on trench bottoms and where indicated. Shape bedding course to provide continuous support for bells, joints, and barrels of pipes and for joints, fittings, and bodies of conduits.

C. Place and compact initial backfill of satisfactory soil, free of particles larger than 1 inch in any dimension, to a height of 12 inches over the pipe or conduit.

1. Carefully compact initial backfill under pipe haunches and compact evenly up on both sides and along the full length of piping or conduit to avoid damage or displacement of piping or conduit. Coordinate backfilling with utilities testing.

D. Place and compact final backfill of satisfactory soil to final subgrade elevation.

E. Install warning tape directly above utilities, 12 inches below finished grade, except 6 inches below subgrade under pavements and slabs.

3.8 SOIL MOISTURE CONTROL

A. Uniformly moisten or aerate subgrade and each subsequent fill or backfill soil layer before compaction to within 2 percent of optimum moisture content.

1. Do not place backfill or fill soil material on surfaces that are muddy, frozen, or contain frost or ice.

2. Remove and replace, or scarify and air dry, otherwise satisfactory soil material that exceeds optimum moisture content by 2 percent and is too wet to compact to specified dry unit weight.

3.9 COMPACTION OF SOIL BACKFILLS AND FILLS

A. Place backfill and fill soil materials in layers not more than 8 inches in loose depth for material compacted by heavy compaction equipment, and not more than 4 inches in loose depth for material compacted by hand-operated tampers.

B. Place backfill and fill soil materials evenly on all sides of structures to required elevations, and uniformly along the full length of each structure.

C. Compact soil materials to not less than the following percentages of maximum dry unit weight according to ASTM D 1557:

1. Under structures, building slabs, steps, and pavements, scarify and recompact top 12 inches of existing subgrade and each layer of backfill or fill soil material at 95 percent.

2. Under walkways, scarify and recompact top 6 inches below subgrade and compact each layer of backfill or fill soil material at 95 percent.

3. Under turf or unpaved areas, scarify and recompact top 6 inches below subgrade and compact each layer of backfill or fill soil material at 95 percent.

4. For utility trenches, compact each layer of initial and final backfill soil material at 95 percent.

3.10 COMPACTION TESTING

A. Testing agency shall test compaction of soils in place according to ASTM D1556 - Density and Unit Weight of Soil In Place by the Cone Method or ASTM D6938, Standard Test Methods for In-Place Density and Water Content of Soil and Soil-Aggregate by Nuclear Methods (Shallow Depth).

B. When testing agency reports that subgrades, fills or backfills have not achieved degree of compaction specifies, scarify and moisten or aerate, or remove and replace soil materials to depth required; recompact and retest until specifies compaction is obtained.

C. Perform tests and analysis of fill material in accordance with ANSI/ASTM D698 - Test Methods for Moisture-Density Relations of Soils and Soil-Aggregate Mixtures, Using 55-lb Rammer and 12-inch drop.

3.11 TESTING SCHEDULE

A. Compaction Testing of Soil:

1. Perform tests at the following locations and frequencies:

a. Trench Backfill: At each compacted backfill layer, at least one test for every 150 feet or less of trench, but no fewer than two tests, or as directed by the Engineer.

3.12 GRADING

A. General: Uniformly grade areas to a smooth surface, free of irregular surface changes. Comply with compaction requirements and grade to cross sections, lines, and elevations indicated.

1. Provide a smooth transition between adjacent existing grades and new grades.

2. Cut out soft spots, fill low spots, and trim high spots to comply with required surface tolerances.

B. Site Rough Grading: Slope grades to direct water away from buildings and to prevent ponding. Finish subgrades to required elevations within the following tolerances:

1. Turf or Unpaved Areas: Plus or minus 1 inch.

2. Walks: Plus or minus 1/4 inch.

3. Pavements: Plus or minus 1/2 inch.

3.13 SUBBASE AND BASE COURSES UNDER PAVEMENTS AND WALKS

A. Place subbase course on subgrades free of mud, frost, snow, or ice.

B. On prepared subgrade, place subbase course under pavements and walks as follows:

1. Place base course material over subbase course under hot-mix asphalt pavement.

2. Shape subbase course and base course to required crown elevations and cross-slope grades.

3. Place subbase course and base course 6 inches or less in compacted thickness in a single layer.

4. Place subbase course and base course that exceeds 6 inches in compacted thickness in layers of equal thickness, with no compacted layer more than 6 inches thick or less than 3 inches thick.

5. Compact subbase course and base course at optimum moisture content to required grades, lines, cross sections, and thickness to not less than 95 percent of maximum dry unit weight according to ASTM D 1557.

3.14 FIELD QUALITY CONTROL

A. Testing Agency: Engage a qualified geotechnical engineering testing agency to perform tests and inspections.

B. Allow testing agency to inspect and test subgrades and each fill or backfill layer. Proceed with subsequent earth moving only after test results for previously completed work comply with requirements.

C. Testing agency shall test compaction of soils in place according to ASTM D 1556, ASTM D 2167, ASTM D 6938, and ASTM D 2937, as applicable. Perform test at the following locations and frequencies:

1. Trench Backfill: At each compacted initial and final backfill layer, at least one test for every 150 feet or less of trench length, but no fewer than two tests.

D. When testing agency reports that subgrades, fills, or backfills have not achieved degree of compaction specified, scarify and moisten or aerate, or remove and replace soil materials to depth required; recompact and retest until specified compaction is obtained.

3.15 PROTECTION

A. Protecting Graded Areas: Protect newly graded areas from traffic, freezing, and erosion. Keep free of trash and debris.

B. Repair and reestablish grades to specified tolerances where completed or partially completed surfaces become eroded, rutted, settled, or where they lose compaction due to subsequent construction operations or weather conditions.

1. Scarify or remove and replace soil material to depth as directed by Engineer; reshape and recompact.

C. Where settling occurs before Project correction period elapses, remove finished surfacing, backfill with additional soil material, compact, and reconstruct surfacing.

1. Restore appearance, quality, and condition of finished surfacing to match adjacent work, and eliminate evidence of restoration to greatest extent possible.

3.16 DISPOSAL OF SURPLUS AND WASTE MATERIALS

A. Transport surplus satisfactory soil to designated storage areas on Owner's property. Stockpile or spread soil as directed by Engineer.

1. Remove waste materials, including unsatisfactory soil, trash, and debris, and legally dispose of them off Owner's property.

END OF SECTION

PART 1 - GENERAL

1.1 SECTION INCLUDES

A. Structure backfilling to sub-grade elevations.

B. Site filling and backfilling.

C. Fill under slabs-on-grade and paving.

D. Consolidation and compaction.

E. Fill for over-excavation.

1.2 RELATED SECTIONS

A. Section 312316 - Excavation

B. Section 315000 - Excavation Support and Protection

1.3 REFERENCES

A. ANSI/ASTM C136 - Method for Sieve Analysis of Fine and Coarse Aggregates.

B. ANSI/ASTM D1557 - Test Methods for Moisture-Density Relations of Soils and Soil-Aggregate Mixtures using 10 lb. (4.54 kg) Rammer and 18-inch (457-mm) Drop.

C. ASTM D2922 - Test Methods for Density of Soil and Soil-Aggregate in Place by Nuclear Methods (Shallow Depth).

1.4 SUBMITTALS

A. Submit under provisions of Section 013300. Submit the following:

1. Sieve analysis for each type fill to be used.

2. Compaction reports

1.5 QUALITY ASSURANCE

A. Do not backfill over or with wet or frozen materials.

B. Field quality control laboratory tests will be paid for out of the cash allowance for testing services. Coordination with the testing lab shall be the Contractor's responsibility and shall be included in the price as bid.

1.6 COORDINATION

A. Coordinate work under provisions of Section 013100.

B. Coordinate and make all arrangements to have the testing laboratory present so that tests can be made. The Engineer may stop backfilling operations until such time as the testing laboratory is on-site to make tests or take required samples.

PART 2 - PRODUCTS

2.1 MATERIALS

A. Type A - Coarse Stone: Angular, washed natural stone; free of shale, clay, friable material, sand, debris; graded in accordance with ANSI/ASTM C136 within the following limits:

Sieve Size	Percent Passing
2-inch (50 mm)	100%
1-inch (25 mm)	95%
3/4-inch (19 mm)	75 - 90%
5/8-inch (16 mm)	35 - 60%
3/8-inch (9.5 mm)	15 - 35%
No. 4 (4.75 mm)	< 5%

B. Type B - Pea Gravel: Natural stone; washed, free of clay, shale, organic matter; graded in accordance with ANSI/ASTM C136, to the following:

1. Minimum Size: 1/4-inch (6.4 mm).

2. Maximum Size: 5/8-inch (16 mm).

C. Type C - Sand: (Structural Fill) Natural river or bank sand; washed, free of silt, clay, loam, friable or soluble materials, or organic matter; graded in accordance with ANSI/ASTM C136, within the following limits:

Sieve Size	Percent Passing
No. 4 (4.75 mm)	100%
No. 14 (1.18 mm)	10 - 100%
No. 50 (0.30 mm)	5 - 90 %
No. 100 (0.15 mm)	4 - 30%
No. 200 (0.075 mm)	0 - 1%

D. Type D - Subsoil: Reused excavated material, graded, free of lumps, rocks and gravel larger than 3 inches (75 mm) in size, debris and contaminants.

PART 3 - EXECUTION

3.1 EXAMINATION

A. Verify existing conditions and substrate.

B. Verify fill materials to be reused are acceptable.

C. Verify items to be buried during backfilling process have been inspected prior to backfilling.

3.2 PREPARATION

A. Compact subgrade to 95 percent maximum dry density in accordance with ANSI/ASTM D1557 or ASTM D2922.

B. Cut out soft areas of subgrade not capable of in situ compaction. Backfill with Type C fill and compact to density equal to or greater than requirements for subsequent backfill material.

3.3 BACKFILLING

A. Backfill areas to contours and elevations with unfrozen materials.

B. Systematically backfill to allow maximum time for natural settlement. Do not backfill over porous, wet, frozen or spongy materials.

C. Place and compact materials in continuous layers not exceeding 6 inches (150 mm) compacted density.

D. Compact backfilled materials to 95 percent maximum dry density in accordance with ANSI/ASTM D1557 or ASTM D2922. Maintain optimum moisture content to attain required density.

E. Employ a placement method that does not disturb or damage structures or other items against which material is backfilled.

F. Backfill only against supported structures. Do not backfill against unsupported structures.

G. Backfill simultaneously on each side of structure.

H. Make grade changes gradual. Blend slope into level areas.

I. Immediately remove surplus materials from the site.

J. Immediately remove suitable backfill material from the site if stockpiling the material is not possible due to site restraints such as: insufficient area to store the material in a safe and secure manner, stockpiling the material would present interference with the operations of the facility, stockpiling the material hinders the operations of other contractors, stockpiling the material does not comply with the adopted Site Utilization Plan specified to be provided in Section 011400 – Work Restrictions. Truck suitable backfill material back to the site as soon as conditions are amenable to continuing the backfilling operations.

K. Leave fill material stockpile areas completely free of excess fill materials.

L. Remove temporary sheeting, as backfilling progresses, under provisions of Section 315000.

3.4 TOLERANCES

A. Maximum Variation from Top Surface of Backfilling: 1 inch (25 mm).

B. Maximum Variation from Top Surface of Backfilling Under Paved Areas: 1/4 inch (6 mm) from required elevations.

3.5 FIELD QUALITY CONTROL

A. Perform testing under provisions of Section 014500.

B. Perform tests and analysis of fill material in accordance with ANSI/ASTM D1557 or ASTM D2922.

C. If tests indicate work does not meet specified requirements, remove work, replace and re-test at no cost to Owner.

D. Conduct compaction tests at the following rates unless otherwise directed by the Engineer:

1. Concrete Structures: One test per 5 vertical feet (1.5 m) of structure.

2. Pavement Subgrade: One test per 500 square feet (50-sq. m) of subgrade immediately prior to placing subbase.

3. Concrete Flatwork: One test per 400 square feet (40-sq. m) of flatwork.

4. Curbing: one test per 100 linear feet (30 m).

5. Piping Installations: Compaction testing at horizontal intervals of 100 feet at the spring-line of the pipe and after each two (2) vertical feet of backfilling thereafter.

6. Precast Concrete Structures: One (1) compaction test per 500 square feet of structure.

E. Coordinate the efforts of the testing laboratory. Have a technician present from the laboratory so those tests can be made.

3.6 PROTECTION

A. Protect finished work under provisions of Section 015000.

B. Recompact fills subjected to vehicular traffic.

END OF SECTION

PART 1 - GENERAL

1.1 SUMMARY

A. Section includes temporary excavation support and protection systems.

B. Erosion control methods shall be in place prior to beginning the installation of excavation support.

C. Related Sections:

1. Section 013233 - Construction Photographs - recording preexisting conditions and excavation support and protection system progress.

1.2 REFERENCES

A. Comply with Occupational Safety and Health Standards - Excavations; Final Rule (29 CFR Part 1926) - OSHA Standards.

1.3 PERFORMANCE REQUIREMENTS

A. Design, furnish, install, monitor, and maintain excavation support and protection system capable of supporting excavation sidewalls and of resisting soil and hydrostatic pressure and superimposed and construction loads.

1. Delegated Design: Design excavation support and protection system, including comprehensive engineering analysis by a qualified professional engineer licensed by the State the project is located, using performance requirements and design criteria indicated.

2. Install excavation support and protection systems without damaging existing buildings, structures, and site improvements adjacent to excavation.

3. Monitor vibrations, settlements, and movements.

1.4 SUBMITTALS (FOR INFORMATION ONLY)

A. Shop Drawings: For excavation support and protection system.

B. Delegated-Design Submittal: For excavation support and protection system indicated to comply with performance requirements and design criteria, including analysis data signed and sealed by the qualified professional engineer responsible for their preparation.

C. Qualification Data: For qualified professional engineer.

D. Other Informational Submittals:

1. Photographs: Show existing conditions of adjacent construction and site improvements that might be misconstrued as damage caused by the absence of, the installation of, or the performance of excavation support and protection systems. Submit before Work begins.

2. Record Drawings: Identifying and locating capped utilities and other subsurface structural, electrical, or mechanical conditions.

1.5 QUALITY ASSURANCE

A. Perform all work of this Section in accordance with OSHA Standards.

B. Sheeting shall be installed by persons regularly engaged in sheeting installation and who have a minimum of five (5) years of experience with the type of system being installed.

C. Sheeting shall be installed under the direct supervision of the professional engineer who designed the sheeting system. This does not require the professional engineer to be present during all phases of its installation, but does require him/her to inspect the work as the work progresses on a part time basis sufficient to adequately certify the system. He/she shall certify, in writing, that sheeting was installed in accordance with the supporting calculations and that the installer complied with recognized procedures, methods, and techniques.

D. The Engineer shall withhold partial payment for that portion of the sheeting work until the certification has been provided for record purposes only. An amount equal to 15% of the scheduled value will be withheld.

1.6 FIELD CONDITIONS

A. Interruption of Existing Utilities: Do not interrupt any utility serving facilities occupied by Owner or others unless permitted under the following conditions and then only after arranging to provide temporary utility according to requirements indicated:

1. Notify Engineer no fewer than seven days in advance of proposed interruption of utility.

2. Do not proceed with interruption of utility without Engineer's written permission.

B. Project-Site Information: Make test borings and conduct exploratory operations necessary for excavation support and protection according to the performance requirements

PART 2 - PRODUCTS

2.1 MATERIALS

A. General: Provide materials that are either new or in serviceable condition.

B. Structural Steel: ASTM A 36/A 36M, ASTM A 690/A 690M, or ASTM A 992/A 992M.

C. Wood Sheeting: Hardwood species of size and dimensions capable of being driven to the required depths and capable of supporting excavation sides and soil pressures when braced; free from wormholes, wind shakes, loose knots, decayed or unsound portions or defects which would impair its strength or tightness; 3 inches thick minimum.

D. Steel Sheeting: Corrugated "Z" shape cross-section; of size and dimensions capable of being driven to the required depths and capable of supporting excavation sides and soil pressures when braced; structurally sound; special shapes for corner construction and transition points.

E. Sheeting Boxes: Steel, of size and dimensions capable of supporting excavation sides and soil pressures; structurally sound.

PART 3 - EXECUTION

3.1 EXAMINATION

A. Verify that the installation of the sheeting will not fall outside the site property lines as delineated on the Contract Drawings.

B. Verify that the existing soil substrate, site conditions and elevations are as indicated on the plans.

C. Verify proposed locations of excavations are as indicated on the plans.

3.2 PREPARATION

A. Protect structures, utilities, sidewalks, pavements, and other facilities from damage caused by settlement, lateral movement, undermining, washout, and other hazards that could develop during excavation support and protection system operations.

1. Shore, support, and protect utilities encountered.

B. Install excavation support and protection systems to ensure minimum interference with roads, streets, walks, and other adjacent occupied and used facilities.

1. Do not close or obstruct streets, walks, or other adjacent occupied or used facilities without permission from Owner and authorities having jurisdiction. Provide alternate routes around closed or obstructed traffic ways if required by authorities having jurisdiction.

C. Locate excavation support and protection systems clear of permanent construction so that construction and finishing of other work is not impeded.

D. Monitor excavation support and protection systems daily during excavation progress and for as long as excavation remains open. Promptly correct bulges, breakage, or other evidence of movement to ensure that excavation support and protection systems remain stable.

E. Promptly repair damages to adjacent facilities caused by installing excavation support and protection systems.

3.3 SHEET PILING

A. Before starting excavation, install one-piece sheet piling lengths and tightly interlock vertical edges to form a continuous barrier. Accurately place the piling, using templates and guide frames unless otherwise recommended in writing by the sheet piling manufacturer. Drive sheeting using a steam or pneumatic hammer. Limit vertical offset of adjacent sheet piling to 60 inches. Accurately align exposed faces of sheet piling to vary not more than 2 inches from a horizontal line and not more than 1:120 out of vertical alignment. Cut tops of sheet piling to uniform elevation at top of excavation.

3.4 SHEETING BOX

A. Place box in trench utilizing a means that will not damage structural integrity of the box. Excavate ahead of the sheeting box only enough to advance the sheeting box and only immediately prior to moving the sheeting box. Backfill on both sides of the sheeting box as it is moved.

3.5 BRACING

A. Bracing: Locate bracing to clear columns, floor framing construction, and other permanent work. If necessary to move brace, install new bracing before removing original brace.

1. Do not place bracing where it will be cast into or included in permanent concrete work unless otherwise approved by Engineer.

2. Install internal bracing if required to prevent spreading or distortion of braced frames.

3.6 FIELD QUALITY CONTROL

A. Survey-Work Benchmarks: Resurvey benchmarks weekly during installation of excavation support and protection systems, excavation progress, and for as long as excavation remains open. Maintain an accurate log of surveyed elevations and positions for comparison with original elevations and positions. Promptly notify Engineer if changes in elevations or positions occur or if cracks, sags, or other damage is evident in adjacent construction.

B. Promptly correct detected bulges, breakage, or other evidence of movement to ensure that excavation support and protection system remains stable.

C. Promptly repair damages to adjacent facilities caused by installation or faulty performance of excavation support and protection systems.

3.7 REMOVAL AND REPAIRS

A. Remove excavation support and protection systems when construction has progressed sufficiently to support excavation and earth and hydrostatic pressures. Remove in stages to avoid disturbing underlying soils and rock or damaging structures, pavements, facilities, and utilities.

1. Remove excavation support and protection systems to a minimum depth of 48 inches below overlying construction and abandon remainder.

2. Fill voids immediately with approved backfill compacted to density specified in Section 312316.13.

3. Repair or replace, as approved by Engineer, adjacent work damaged or displaced by removing excavation support and protection systems.

END OF SECTION

PART 1 - GENERAL

1.1 SUMMARY

A. Section Includes:

1. Pipe and fittings.
2. Couplings.
3. Manholes.
4. Non-shrink grout.
5. Cast iron frames and covers.
6. Lock joint flexible sleeves.
7. Accessories

B. Related Sections:

1. Section 312316.13 - Trenching and Backfilling

C. References

1. ASTM C33 - Concrete Aggregates.
2. ASTM C109 - Test Method for Compressive Strength of Hydraulic Cement Mortars Using 2-inch or 50-mm Cube Specimens.
3. ASTM C150 - Portland Cement.
4. ASTM C478 - Precast Reinforced Concrete Manhole Sections.
5. Great Lakes-Upper Mississippi River Board of State Sanitary Engineers. Recommended Standards for Sewage Works (Ten State Standards).
6. ACI 304 - Recommended Practice for Measuring, Mixing, Transporting and Placing Concrete.
7. ACI 308 - Standard Practice for Curing Concrete.
8. ANSI/ASTM A185 - Welded Steel Wire Fabric for Concrete Reinforcement.
9. ANSI B16.1 - Cast Iron Pipe Flanges and Flanged Fittings.
10. ANSI/AWWA C110 - Ductile-Iron and Gray-Iron Fittings, 3 in. through 48 in., for Water and Other Liquids.
11. ANSI/AWWA - C115/A21.15 - American National Standard for Flanged Ductile Iron Pipe with Threaded Flanges.

12. ANSI/AWWA C150/A21.50 - American National Standard for Thickness Design of Ductile Iron Pipe.

13. ANSI/AWWA C600-93 - Installation of Ductile Iron Water Mains and Appurtenances.

14. ANSI B18.2.1 - Square and Hex Bolts and Screws Inch Series Including Hex Cap Screws and Lag Screws.

15. ANSI B18.2.2 - Square and Hex Nuts (Inch Series).

16. ASTM A307 - Carbon Steel Bolts and Studs, 60,000 psi Tensile Strength.

17. ANSI B18.2.1 - Square and Hex Bolts and Screws Inch Series Including Hex Cap Screws and Lag Screws.

18. ANSI B18.2.2 - Square and Hex Nuts (Inch Series).

19. ASTM C32 - Standard Specification for Sewer and Manhole Brick (Made from clay or shale).

1.2 INFORMATIONAL SUBMITTALS

A. Product Data:

1. Pipe materials, pipe fittings, accessories and detectable marking tape.

B. Shop Drawings: For manholes. Include plans, elevations, sections, details, and frames and covers.

C. Manufacturer's Installation Instructions: Indicate special procedures required to install products.

D. Manufacturer's Certificate: Certify that products meet or exceed specified requirements.

E. Precast Concrete Structures: Indicate structure dimensions, sleeve locations, elevation and size, concrete strength and reinforcing bars. Submit manhole schedule showing all necessary structure information used to fabricate the unit.

F. Frames and Covers: Indicate material, loading capability and dimensions.

G. Non-Shrink Grout: Indicate shrinkage and expansion characteristics, strength, setting time, and composition.

H. Submit description of proposed method of control for line and grade during sanitary sewer installation.

1.3 DELIVERY, STORAGE, AND HANDLING

A. Do not store plastic pipe, and fittings in direct sunlight.

B. Protect pipe, pipe fittings, and seals from dirt and damage.

C. Handle manholes according to manufacturer's written rigging instructions.

1.4 PROJECT CONDITIONS

A. Interruption of Existing Sanitary Sewerage Service: Do not interrupt service to facilities occupied by Owner or others unless permitted under the following conditions and then only after arranging to provide temporary service according to requirements indicated:

1. Notify Engineer no fewer than two days in advance of proposed interruption of service.

2. Do not proceed with interruption of service without Engineer's written permission.

1.5 PROJECT RECORD DOCUMENTS

A. Accurately record actual locations of piping mains, house connections, fittings, and invert elevations.

B. Identify and describe discovery of uncharted utilities.

1.6 QUALITY ASSURANCE

A. Perform work in accordance with the following:

1. Ten State Standards

2. Suffolk County Department of Health Services Standards

B. PVC Pipe: Manufacturer’s name, size, letter "PVC", "Sewer Pipe" and manufacturer's code, cell classification and ASTM designation stamped on pipe.

1.7 ENVIRONMENTAL REQUIREMENTS

A. Do not install underground piping when bedding is wet or frozen.

B. Do not mix or place mortar and non-shrink grout if ambient temperature is below 40 degrees F.

C. Do not backfill over or with frozen materials.

PART 2 - PRODUCTS

2.1 PIPE AND FITTINGS

A. PVC Pipe: AWWA C900, DR 18, Class 150 PVC with cell classification of 12454B as defined in Specifications ASTM D1784.

B. Ductile Iron Pipe: AMERICAN DUCTILE IRON PIPE, US PIPE & FOUNDRY CO. or equal.

1. DI pipe shall be centrifugally cast with primary graphite in nodular form or spherulitic and conform to AWWA C151.

2. All buried and exposed (dry and submerged service) DI pipe shall be thickness Class 53 in locations indicated on Drawings.

3. Grooved end DI pipe shall conform to AWWA C606. All pipe shall be manufactured to rigid groove dimensions.

4. All buried pipe and fittings shall be provided with bituminous seal coat in accordance with AWWA C106, inside and out.

5. All exposed (dry and immersion service) pipe and fittings shall be provided with an interior seal coat in accordance with AWWA C106. The exterior of all exposed pipe and fittings shall be factory primed using a high solids epoxy system with a shop coat thickness of 3.0-8.0 mils DFT. The primer shall be manufactured by Tnemec Company or equal and be red oxide in color. Field paint exposed pipe (dry and immersion service) as specified in Section 099100.

   A. Fittings: Comply with AWWA C110 for center-to-center end dimensions.

6. Buried: All buried fitting and buried valve joints shall be mechanically restrained and be provided with thrust blocking as detailed on the Drawings. Mechanical joint restraint shall be incorporated into the design of the follower gland. The restraining mechanism shall consist of individually actuated wedges. The joint restraint ring shall be made of 60-42-10 ductile iron conforming to ASTM A536. The restraint shall be series 1100 Megalug by Ebba Iron or equal.

7. Joints:

   A. Buried Piping: AWWA C111 push on joint with stainless steel locking segments vulcanized into rubber ring gasket, Flex-Ring ® by American Ductile Iron Pipe or FieldLok ® by U.S. Pipe or equal.

   B. Exposed and Buried Service Bolts and Nuts: Nuts and bolts shall be alloy steel conforming to the physical properties of ASTM A563. Bolts shall conform to ANSI B18.2.1. Nuts shall conform to ANSI B18.2.2. Bolts and nuts for grooved pipe shall be heat-treated plated carbon steel, track head, conforming to the physical properties of ASTM A183. Paint exposed and buried bolts and nuts in accordance with Section 099100.

   C. Lubricant for Joints: Shall have no deteriorating effects on gasket or pipe material and shall be supplied by the pipe manufacturer or joint manufacturer in sufficient quantity.

   D. Flanged Adapters: Dismantling joint Smith Blair, Inc., Model 975 or equal for plain end steel or cast iron pipe with all bolts, rings, gaskets and accessories.

   E. Couplings: Smith Blair, Inc., Model 411 or equal for plain end steel or cast iron pipe with all bolts, rings, gaskets and accessories.

   F. Restrained Joint Fittings: Ford Meter Box Co., Inc., UNI-FLANGE “BlockBuster” series 13100, 1400 & 1500 for PVC, ductile iron and steel piping.

C. Precast concrete: COASTAL PIPELINE PRODUCTS, Calverton, New York or equal.

2.2 MANHOLES

A. Standard Precast Concrete Manholes:

1. Description: ASTM C 478 (ASTM C 478M), precast, reinforced concrete, of depth indicated, with provision for sealant joints.

2. Inside diameter: 48 inches (1200 mm) minimum unless otherwise indicated.

3. Ballast: Increase thickness of precast concrete sections or add concrete to base section, as required to prevent flotation.

4. Base Section: 8-inch (150-mm) minimum thickness for floor slab and 8-inch (100-mm) minimum thickness for walls and base riser section; with separate base slab or base section with integral floor.

5. Riser Sections: 4-inch (100-mm) minimum thickness, of length to provide depth indicated.

6. Top Section: Flat-slab-top type.

7. Joint Sealant: ASTM C 990 (ASTM C 990M), bitumen or butyl rubber.

8. Steps: ASTM A 615/A 615M, deformed, 1/2-inch (13-mm) steel reinforcing rods encased in ASTM D 4101, PP; wide enough to allow worker to place both feet on one step and designed to prevent lateral slippage off step. Cast or anchor steps into sidewalls at 12- inch (300- to 400-mm) intervals. Omit steps if total depth from floor of manhole to finished grade is less than 48 inches.

B. Manhole Frames and Covers:

1. Description: Ferrous; 24-inch (610-mm) ID by 8-inch (175- to 225-mm) riser, with 4-inch- (100-mm-) minimum-width flange and 26-inch- (660-mm-) diameter cover. Include indented top design with lettering cast into cover, using wording equivalent to "SANITARY SEWER."

2. Material: ASTM A 48/A 48M, Class 35 gray iron unless otherwise indicated.

2.3 CONCRETE

A. General: Cast-in-place concrete complying with ACI 318, ACI 350/350R, and the following:

1. Cement: ASTM C 150, Type II.

2. Fine Aggregate: ASTM C 33, sand.

3. Coarse Aggregate: ASTM C 33, crushed gravel.

4. Water: Potable.

B. Portland Cement Design Mix: 4000 psi minimum, with 0.45 maximum water/cementitious materials ratio.

1. Reinforcing Fabric: ASTM A 185/A 185M, steel, welded wire fabric, plain.

2. Reinforcing Bars: ASTM A 615/A 615M, Grade 60 (420 MPa) deformed steel.

C. Manhole Channels and Benches: Factory or field formed from concrete. Portland cement design mix, 4000 psi minimum, with 0.45 maximum water/cementitious materials ratio. Include channels and benches in manholes.

1. Channels: Concrete invert, formed to same width as connected piping, with height of vertical sides to three-fourths of pipe diameter. Form curved channels with smooth, uniform radius and slope.

A. Invert Slope: 0.1 foot through manhole.

2. Benches: Concrete, sloped to drain into channel.

A. Slope: 4 percent.

D. Ballast and Pipe Supports: Portland cement design mix, 3000 psi minimum, with 0.58 maximum water/cementitious materials ratio.

1. Reinforcing Bars: ASTM A 615/A 615M, Grade 60 (420 MPa) deformed steel.

E. Flexible Pipe to Manhole Connector: NPC, INC. KOR-N-SEAL I which meets or exceeds the requirements of ASTM C923. Installation band to secure to opening in manhole wall and pipe clamp shall be Series 304 stainless steel.

2.4 NON-SHRINK GROUT

A. General: No shrinkage (0.0%) and a maximum 4.0% expansion when tested in accordance with ASTM C827. No shrinkage (0.0%) and a maximum of 0.2% expansion in the hardened state when tested in accordance with CRD-C-621.

B. Compressive Strength: A minimum 28-day compressive strength of 5,000 psi when tested in accordance with ASTM C109.

C. Setting Time: A minimum initial set time of 60 minutes when tested in accordance with ASTM C191.

D. Composition: Shall not contain metallic particles such as aluminum powders, iron filings, or expansive cement.

2.5 ACCESSORIES

A. Marking Tape: Solid plastic detectable tape with a minimum total thickness of 4.5 mil. Tape resistant to alkalis, acids and other destructive elements. Green in color, minimum 6 inches wide with the words "Caution - Sanitary Sewer" repeated every 16-36 inches, conforming to APWA uniform color code and in accordance with SCDPW requirements.

B. Sewer Brick: ASTM C32, Grade MS.

2.6 SOURCE QUALITY CONTROL

A. Provide compressive strength test results of concrete used in making precast concrete structures. Provide data for cylinders tested in accordance with ASTM C39 at seven days and twenty-eight days.

B. Age precast concrete structures at least two weeks before shipment.

PART 3 - EXECUTION

3.1 PIPING INSTALLATION

A. General Locations and Arrangements: Drawing plans and details indicate general location and arrangement of underground sanitary sewer piping. Location and arrangement of piping layout take into account design considerations. Install piping as indicated, to extent practical. Where specific installation is not indicated, follow piping manufacturer's written instructions.

B. Install piping beginning at low point, true to grades and alignment indicated with unbroken continuity of invert. Place bell ends of piping facing upstream. Install gaskets, seals, sleeves, and couplings according to manufacturer's written instructions for using lubricants, cements, and other installation requirements. Maximum variation from the indicated slope is 1/8 inch in 10 feet.

C. Install manholes for changes in direction unless fittings are indicated. Use fittings for branch connections unless direct tap into existing sewer is indicated.

D. Install proper size increasers, reducers, and couplings where different sizes or materials of pipes and fittings are connected. Reducing size of piping in direction of flow is prohibited.

E. Install gravity-flow, nonpressure, drainage piping according to the following:

1. Install piping pitched down in direction of flow, at minimum slope of 1 percent unless otherwise indicated.

F. Clear interior of piping and manholes of dirt and superfluous material as work progresses. Maintain swab or drag in piping, and pull past each joint as it is completed. Place plug in end of incomplete piping at end of day and when work stops.

3.2 PIPE JOINT CONSTRUCTION

A. Pipe couplings, expansion joints, and deflection fittings with pressure ratings at least equal to piping rating may be used in applications below unless otherwise indicated.

1. Use nonpressure flexible couplings where required to join gravity-flow, nonpressure sewer piping unless otherwise indicated.

A. Shielded flexible couplings for pipes of same or slightly different OD.

B. Unshielded, increaser/reducer-pattern, flexible couplings for pipes with different OD.

C. Ring-type flexible couplings for piping of different sizes where annular space between smaller piping's OD and larger piping's ID permits installation.

3.3 MANHOLE INSTALLATION

A. General: Install manholes complete with appurtenances and accessories indicated.

B. Install precast concrete manhole sections with sealants according to ASTM C 891.

C. Form continuous concrete channels and benches between inlets and outlet.

D. Set tops of frames and covers flush with finished surface of manholes that occur in pavements. Set tops (76 mm) at finished surface elsewhere unless otherwise indicated.

E. Install precast concrete base, shaft, and slab top of precast plumb and level. Establish elevations and pipe inverts for inlets and outlets as indicated. Locate manhole rungs as directed by the Engineer relative to the top slab opening.

F. Adjust lock joint flexible sleeve or install non-shrink grout to provide water-tight pipe penetration. Mount lid and frame level in grout, secured to top section to elevation indicated.

G. Perform all mixing, surface preparation and grouting in accordance with manufacturer's recommendations.

H. In each stretch of underground pipe, light shall be visible from one end to the other and the pipe shall be true to line and grade. All deposits found in the pipes, protruding cement or packing shall be removed and the sewer bore left clean and free through its entire length. There shall be no visible leakage into any stretch of sewer. All manholes and other appurtenance shall be of the specified size and form and of neat appearance, and their tops shall be set to the proper grade. If the Work is found to be in any condition other than in accordance with these specifications, it shall be brought to proper condition by cleaning, pointing, or if necessary, excavating and rebuilding.

3.4 CONNECTIONS

A. Make connections to existing piping and underground manholes.

1. Protect existing piping and manholes to prevent concrete or debris from entering while making tap connections. Remove debris or other extraneous material that may accumulate.

2. Make connections between pipes of different materials with approved adapters. The encasement of adapter made connections with concrete is not permitted. Commence pipe laying at the lowest point, with the spigot ends pointing in the direction of flow.

3. The use of excessive force or blunt instruments is prohibited in installing the pipe into the walls of existing manholes and structures. Neatly core drill a hole through the existing wall, to achieve the minimum diameter hole required to install the pipe true to line and grade. The structure shall be maintained in good repair. Provide flexible and watertight connection at the wall.

4. In making the connection to an existing manhole or structure, pump out each structure in order to make this connection.

3.5 IDENTIFICATION

A. Comply with requirements in Section 312316.13 “Trenching and Backfilling" for underground utility identification devices. Arrange for installation of green warning tapes directly over piping and at outside edges of underground manholes.

1. Use detectable warning tape over nonferrous piping and over edges of underground manholes.

2. After partially backfilling, install marking tape 18 to 24-inches above crown of pipe. Place as straight as possible. Hold tape to position by adding backfill with hand shovels before using mechanical equipment to finish backfill.

3.6 FIELD QUALITY CONTROL

A. Inspect interior of piping to determine whether line displacement or other damage has occurred. Inspect after approximately 24 inches of backfill is in place, and again at completion of Project.

1. Submit separate report for each system inspection.

2. Defects requiring correction include the following:

A. Alignment: Less than full diameter of inside of pipe is visible between structures.

B. Deflection: Flexible piping with deflection that prevents passage of ball or cylinder of size not less than 96 percent of piping diameter.

C. Damage: Crushed, broken, cracked, or otherwise damaged piping.

D. Infiltration: Water leakage into piping.

E. Exfiltration: Water leakage from or around piping.

3. Replace defective piping using new materials, and repeat inspections until defects are within allowances specified.

4. Reinspect and repeat procedure until results are satisfactory.

B. Non-Pressure Piping Testing:

1. Leakage shall be determined by exfiltration testing. The Engineer reserves the right to also require infiltration testing.

2. Air testing is not permitted.

3. Leakage testing shall include the main non-pressure pipe, house connections, and appurtenances on the section of pipeline being tested.

4. Limit pipeline test sections to runs between adjacent structures. Manholes may be tested simultaneously with pipes.

5. Adequately plug ends of house connections, stubs, and openings from which water may escape.

6. Use clean water for exfiltration tests.

7. Determine groundwater levels by installing piezometers, test holes or test pits at intervals not to exceed 1,000 feet.

C. Pipe Exfiltration Test:

1. The minimum water level required for testing is 4 feet above the crown of the upstream (highest) end of the pipe being tested or 2 feet above the maximum groundwater level along the test section, whichever is greater.

2. Install a watertight plug in the downstream end of the manhole pipe.

3. Fill upstream manhole with water and conduct test for six (6) hours.

4. Upon satisfactorily completing the test, remove the downstream plug in the presence of Engineer. Do not touch nor remove anything until approved by Engineer.

5. Maximum allowable exfiltration is one hundred (100) gallons per inch diameter per mile per day.

D. Pipe Infiltration Test:

1. The minimum head of groundwater required for infiltration testing is 2 feet above the crown of the pipe at the upstream end but must in all cases reach its normal level.

2. Infiltration may be measured with an approved graduated container capable of intercepting all inflow, by a pipeline V-notch weir, or by other approved methods. When using instream type measuring devices, do not measure flows until steady state conditions are established.

3. Maximum allowable infiltration is one hundred (100) gallons per inch diameter per day per mile of pipe.

4. Where groundwater level is at least 2 feet above the highest manhole joint, manholes may be included in the test. No visible leakage will be permitted in manholes.

E. Leaks and loss in test pressure constitute defects that must be repaired.

F. Perform compaction testing in accordance with ASTM D2922.

G. Perform field inspection and testing under provisions of Division 01 Section "Quality Control".

H. Request inspection prior to and immediately after placing backfill. Perform compaction testing in accordance with ASTM D2922. If tests indicate work does not meet specified requirements, remove work, replace, and retest at no cost to Owner.

3.7 INSTALLATION - GENERAL

A. Maintain separation of sanitary sewer from water piping in accordance with regulations of County Department of Health, State Department of Environmental Conservation, and the Recommended Standards for Wastewater Facilities.

B. Parallel Water and Sewer Lines - Pipelines carrying sewage, sludge or other wastewater, whether treated or not, shall not be located any closer than 10 feet horizontally from a potable water pipeline. If it is not possible to maintain horizontal separation, the lines may be located at least 3 feet horizontally from each other, provided that there is at least 18 inches of clear vertical separation, with the sewer line being below the water line.

1. Special Conditions: When it is impossible to achieve the requirements of the above paragraph, immediately notify Engineer. If Engineer concurs, he will order the construction of the sewer with ductile mechanical joint pipe and may order the reconstruction of the existing water line. Regardless, sewer shall be installed at a lower elevation than the water line and sewer line and the reconstructed water line shall be pressure tested for leakage in accordance with water utility requirements.

C. Water and Sewer Line Crossings - Whenever water and sewer lines must cross, the sewer shall be situated below the water line with at least an 18 inches of clear vertical separation. In no case shall a water line pass under a sewer.

1. Special Conditions: When it is impossible to achieve the requirements of the above paragraph, immediately notify Engineer. If Engineer concurs, he will order 1) the water pipe raised, 2) the construction of the sewer line with ductile mechanical joint pipe. Regardless, sewer shall be installed at a lower elevation than the water line. The full length of sewer pipe shall be centered under the crossing line. The joint shall not be closer than 9.5 feet to the crossing.

D. Unusual Conditions - Immediately notify Engineer when it is impossible to achieve any of the above conditions. The Engineer will prescribe the procedures to be followed.

E. Install pipe to allow for expansion and contraction without stressing pipe or joints.

F. Drainage of construction excavations through sanitary sewers shall not be permitted.

G. Maintain the excavation free of water during the progress of the Work. No pipe shall be laid in water nor shall there by any joints made up in water. No separate allowance for pumping or otherwise removing water will be made. All slides or cave-ins of the trenches or cuts shall be remedied at the expense of the Contractor, and to the satisfaction of the Engineer.

H. All adjustments to the line and grade of pipe laid on earth foundation shall be done by scraping away or filling in the earth under the barrel of the pipe, and not be blocking or wedging. Where excavation has been carried too deep but not in excess of six (6) inches, the Contractor may replace with suitable earth and hand tamp same to provide a firm foundation. Wherever the Contractor has excavated to a depth in excess of six (6) inches, the Engineer may order broken stone or gravel fill without additional compensation to the Contractor. In all cases the trench under the joint shall be excavated to permit an even bearing for the barrel of the pipe.

I. When unsuitable materials and/or conditions are encountered, the Engineer may direct the excavation to continue below grade and the trench filled with crushed blue stone foundation, or the Engineer may order other corrective measures.

J. Where required, holes and spaces to be used for joints shall be sufficiently large to leave the joint of each pipe free and not resting on the ground at any point. Every joint shall be made up in the trench.

3.8 PIPE INSTALLATION

A. Excavate and shape the trench to conform with the details shown on the Drawings. If accidental or intentional over excavation of the trench occurs, in depth or width, such corrective measures as are, in the opinion of the Engineer necessary to rectify the conditions shall be taken by the Contractor. No additional compensation will be made therefor. This requirement applies equally in the case of cave-in of the trench walls, by failure to apply necessary sheeting measures.

B. Join sections of pipe by hand only, without the use of levers or other mechanical aids. Both the sealing gasket and the adjoining spigot end shall be thoroughly cleaned and coated with lubricant. The spigot end shall be placed in the bell end only as far as the reference mark provided on each spigot end, to allow for expansion, contraction, and deflection, and not “pushed home”.

C. Pipe lengths of twenty (20) feet shall be utilized, except that shorter lengths of 12-1/2 feet, or random lengths, may be utilized where connections to manholes, house connection wyes and tees, and similar circumstances are present, only inasmuch as is necessary to properly effect the joint(s) in the desired location. In all cases, the number of pipe joints shall be minimized. In the case of random lengths of pipe, provide proper reference marks on spigot ends prior to assembling.

D. Perform field cutting of pipe to ensure a perfectly square cut. After cutting, bevel the cut end to match that of a factory finished beveled end. Bevels shall be formed with the use of a beveling tool, which will automatically produce the correct taper. Take care to ensure that the correct bevel angle is produced.

E. Place and compact embedment materials in accordance with Paragraph 5.10.2, “Methods of Placing Embedment Materials”, of Recommended Standard UNI-B-5 of the Uni-Bell Plastic Pipe Association, subject to the conditions of the Plans and these Specifications. Pipe haunching and initial backfill shall be brought up and compacted equally on either side of the pipe, to preclude disturbance of the pipe, in layers not to exceed four inches in height, by use of hand tamping supplemented by mechanical compacting using hand-operated compactors, similar to “Whacker” or equal. Flooding, puddling and jetting of initial backfill are prohibited for PVC pipe installations.

F. Place and compact final backfill, as modified herein. “Hydrohammers” and similar compacting equipment, which, in the opinion of the Engineer, may cause disturbance to the pipe and/or the materials in the pipe zone (bedding, haunching, and initial backfill) shall not be utilized within four feet (4’) of the pipe. This shall not be construed to preclude the use of mechanical compactors, “hoe-packers”, and the like, which may be demonstrated, by the Contractor, to produce no deleterious effects on the embedment materials. Such demonstration shall be the responsibility of the Contractor. The use of mechanical compaction equipment shall be in accordance with the pipe manufacturer’s recommendations, and as approved by the Engineer.

G. The Contractor's specific attention is directed towards effecting and maintaining the specified compaction of the embedment materials in the pipe zone. Lower limit for sheeting driven and pulled shall be one foot above the top of the pipe. All sheeting placed below this level shall be cut off at said point and left in place.

H. Use of a moveable "trench box" when moved, may cause disturbance to the materials in the pipe zone. Usage of a trench box, for protection of personnel in accordance with OSHA requirements, will be permitted only under one of the following conditions, which shall be the Contractor's responsibility to propose and employ:

1. Position the moveable trench box on a shelf above the pipe springline, with the pipe installed in a narrow, vertical walled subditch. The width of the subditch shall not exceed the O.D. of the pipe plus 9 inches on each side; or

2. Increase the overall trench width to produce a minimum clearance of 2-1/2 pipe diameters between the pipe barrel and the trench box on each side of the pipe after embedment has been placed and compacted. In utilizing this option, all voids left in the embedment material as the result of trench box removal shall be filled and compacted. Disturbance to the loss of compaction density in the pipe zones is not permitted.

3. Submit proposed method of meeting the above-specified conditions to the Engineer, for approval. No additional compensation will be made for meeting these conditions, nor for additional excavation, backfill, repaving, or similar items, outside of the payment limits as shown on the Drawings.

I. Compaction of embedment materials, including bedding, haunching, and initial backfill shall be as shown on the Drawings, but in no case shall the density attained be less than that required for the final backfill above. The Contractor's attention is directed toward compaction requirements for pavement sub-base material, specified elsewhere in the specifications.

3.9 SITE TOLERANCES

A. Maximum variation from proposed rim elevation shall be 1/4 inch.

3.10 PROTECTION

A. Protect pipes, structures and appurtenances from damage or displacement during backfilling.

END OF SECTION

H2M architects + engineers
538 Broad Hollow Rd, 4th Floor East, Melville, NY 11747
tel 631.756.8000 fax 631.694.4122
www.h2m.com

TOWN OF RIVERHEAD
RIVERHEAD SEWER DISTRICT

CONTRACT NO. RDSD 1801

841 OLD COUNTRY ROAD - PROPOSED FUEL FACILITY
SEWER MAIN & EASEMENT RELOCATION

SUFFOLK COUNTY, NEW YORK

JULY 2018

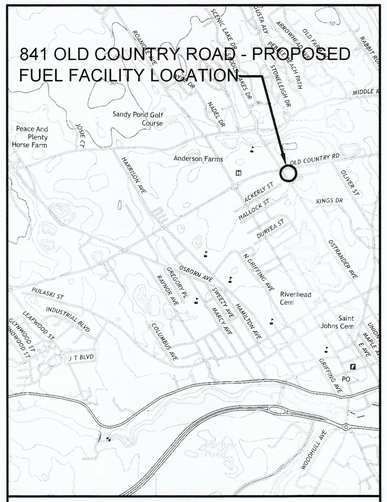

LOCATION MAP
1" = 2000'
N

TOWN SUPERVISOR

Laura Jens-Smith

TOWN BOARD

Jodi Giglio
John Dunleavy
James Wooten
Tim Hubbard

TOWN CLERK

Diane M. Wilhelm

SEWER DISTRICT SUPERINTENDENT

Michael P. Reichel

ASSISTANT SUPERINTENDENT

Timothy Allen

CONSECUTIVE PG. #	SHEET INDEX
1	G0.0 - COVER SHEET
2	G1.0 - GENERAL NOTES
3	C1.0 - EXISTING CONDITIONS & PROPOSED SITE PLAN
4	C2.0 - SEWER & MANHOLE DETAILS

H2M architects + engineers

538 Broad Hollow Road
4th Floor East
Melville, NY 11747
P:(631)756-8000
F:(631)694-4122

Melville, NY 11747
Albany, NY 12205
White Plains, NY 11601
New City, NY 10956
Parsippany, NJ 07054
Howell, NJ 07731

PROJECT #: RDSD 1801
DATE: JULY 2018
DESIGNED BY: SCH/NFB/JJF
DRAWN BY: NFB
CHECKED BY:
REVIEWED BY:

SEAL: STATE OF NEW YORK · STEVEN C. HAMPTON · No. 62108 · LICENSED PROFESSIONAL ENGINEER

*ALTERATION OF THIS DOCUMENT EXCEPT BY A LICENSED PROFESSIONAL IS UNLAWFUL

CLIENT
Town of Riverhead
Riverhead Sewer District
841 OLD COUNTRY ROAD - PROPOSED FUEL FACILITY SEWER MAIN & EASEMENT RELOCATION

SHEET # **G0.0**

SHEET # 1 OF 4

GENERAL CONSTRUCTION AND PROJECT NOTES:

1. WORK SHOWN IS NEW UNLESS SPECIFICALLY NOTED OR OTHERWISE INDICATED AS EXISTING.
2. BIDS SHALL BE BASED ON NORMAL SEASONAL WORKING CONDITIONS WITH FROST PENETRATION OF NOT MORE THAN FOUR (4) INCHES.
3. MISCELLANEOUS WORK INCLUDING PROTECTION OF EXISTING CURBING, HAND DIGGING AROUND AND BRACING OF POLES AND SIGNS, REMOVING AND REPLACING MAILBOXES, SIGNS, PROTECTION OF UNDERGROUND UTILITIES, CROSSING UNDER, OVER OR ADJACENT TO UNDERGROUND UTILITIES, SURFACE OR SUB-SURFACE STRUCTURES, SHEETING REQUIRED DUE TO LOCATION OF SEWER OR BUILDING CONNECTIONS, AND CLOSE PROXIMITY OF EXISTING UTILITIES, CURBS, AND IMPROVEMENTS, PROTECTION OF PEDESTRIAN AND VEHICULAR TRAFFIC, ETC., SHALL BE THE SOLE RESPONSIBILITY OF THE CONTRACTOR AND WILL BE COMPLETED AT NO ADDITIONAL COST TO THE OWNER.
4. RESTORE ALL AREAS DAMAGED/REMOVED DURING INSTALLATION OF THE SEWER. THESE AREAS INCLUDE, BUT ARE NOT LIMITED TO THE FOLLOWING: DRIVEWAY APRONS, DRIVEWAYS, WALKWAYS, TRAFFIC SIGNS, COMMERCIAL SIGNAGE, TRAFFIC SIGNAL LOOPS, PAVEMENT STRIPING AND MARKINGS, CURBING, SIDEWALKS, UTILITY POLES, FENCING, GUIDE RAILS, LANDSCAPING, TREES, MAILBOXES, POSTS, POLES, STEPS AND VEHICLES.
5. INSTALL PIPE TO PROVIDE A MINIMUM COVER TO FINISH GRADE OF FOUR (4) FEET.
6. PIPE AND MATERIAL SHALL NOT BE STOCKPILED IN ANY THOROUGHFARE OR BLOCKING ACCESS TO BUSINESSES.
7. OBTAIN AND HAVE ON THE JOB SITE AT ALL TIMES, THE PROPER ROAD OPENING AND OTHER PERMITS AS REQUIRED BY NEW YORK STATE, SUFFOLK COUNTY, AND THE TOWN OF RIVERHEAD OR ANY OTHER PERMITTING AGENCY. THE COST OF SUCH PERMITS SHALL BE THE SOLE RESPONSIBILITY OF THE CONTRACTOR.
8. NOTIFY THE OWNER AT LEAST 24 HOURS PRIOR TO THE COMMENCEMENT OF THE WORK. THE SAME NOTICE SHALL BE REQUIRED WHEN RESUMING WORK AFTER ANY STOPPAGE OR DELAY.
9. PERFORM DAILY CLEAN-UP OPERATIONS WHICH INCLUDE REMOVAL OF DEBRIS AND EXCESS CONSTRUCTION MATERIAL TO THE SATISFACTION OF THE OWNER AND THE ENGINEER.
10. DURING ALL NON-WORKING HOURS, STORE ALL EQUIPMENT AND MATERIALS WITHIN THE DESIGNATED AREAS AT THE PROJECT SITE.
11. ALL DIMENSIONS SHOWN ARE APPROXIMATE AND SUBJECT TO THE APPROVAL OF THE OWNER AND THE ENGINEER.
12. CONFORM TO ALL APPLICABLE STATE AND LOCAL CODE REQUIREMENTS, THE CONTRACT, AND SUBJECT TO THE APPROVAL OF THE OWNER AND THE ENGINEER.
13. SECURE CONSTRUCTION SITE IN ACCORDANCE WITH ALL APPLICABLE SAFETY STANDARDS.
14. ALL ELEVATIONS ARE BASED ON N.A.V.D. 88, UNLESS OTHERWISE INDICATED.
15. PROTECT AND MAINTAIN ALL BENCHMARKS AND MONUMENTS. RESTORE BENCHMARKS AND MONUMENTS DISTURBED BY THE CONTRACTOR'S WORK.
16. CONTRACTOR SHALL BE RESPONSIBLE FOR ALL LAYOUT, SURVEY, ETC. AS REQUIRED TO COMPLETE THE WORK.
17. THE DRAWING AND SPECIFICATIONS ARE COMPLEMENTARY, THE PROJECT MANUAL SEPARATELY BOUND, CONTAINS THE CONDITIONS OF THE CONTRACT, PROCEDURES AND TECHNICAL SPECIFICATIONS.
18. DO NOT SCALE MEASURE AND DRAWING. VERIFY THE FIGURES, DIMENSIONS AND DESIGN INTENTION SHOWN ON THE DRAWINGS BEFORE BEGINNING LAYOUT OF THE WORK.
19. REPORT ANY ERRORS, INACCURACIES, MISSING DIMENSIONAL REQUIREMENTS OR CONFLICTS TO THE ARCHITECT/ENGINEER IN WRITING BEFORE BEGINNING ANY WORK.
20. VERIFY EXACT LAYOUT WITH ALL EXISTING CONDITIONS AND COORDINATE ALL WORK TO BE UNDERTAKEN PRIOR TO BEGINNING ANY WORK. NOTIFY THE ARCHITECT/ENGINEER IN WRITING BEFORE BEGINNING WORK IF ANY DISCREPANCIES ARE FOUND WITH CONDITIONS ENCOUNTERED, AS WELL AS ITEMS COVERED IN 20 AND 22. CONTRACTOR WILL BE RESPONSIBLE FOR ALL TEMPORARY MEASURES, TIME LOST, CHANGES TO THE WORK SCOPE WITHOUT ANY ADDITIONAL COMPENSATION IF CONTRACTOR FAILS TO PROVIDE AFOREMENTIONED VERIFICATIONS AND COORDINATION PRIOR TO COMMENCING WORK.
21. DISTURB ONLY THOSE AREAS OF THE SITE AFFECTED BY NEW CONSTRUCTION, UNLESS NOTED OTHERWISE. PROTECT ALL OTHER AREAS. CONTRACTOR SHALL COMPLETELY RESTORE ALL AREAS DISTURBED DURING CONSTRUCTION.
22. PROTECT ADJOINING PROPERTIES WHEN CONDUCTING WORK.
23. ALL WORK SHALL COMPLY WITH ALL APPLICABLE CODES, LAWS, AGENCIES HAVING JURISDICTION, AND STATUS AS REQUIRED.
24. ADHERE TO MANUFACTURER'S PRINTED INSTRUCTION.
25. VERIFY ALL CHANGES TO WORK IN WRITING WITH THE ENGINEER AND OWNER BEFORE BEGINNING RELATED WORK.
26. REVIEW ALL DRAWINGS CONTAINED IN THE SET SO AS TO BECOME FAMILIAR WITH THE WORK REQUIRED UNDER THE WORK. COORDINATE WORK WITH ALL OTHER TRADES.
27. VERIFY AND ADJUST APPROXIMATE DIMENSIONS (+/-) IN THE FIELD. VERIFY WITH ENGINEER PRIOR TO CONSTRUCTION.
28. PROTECT ALL ADJACENT EXISTING CONSTRUCTION, ITEMS, FINISHES, ETC. AND PATCH, REPAIR AND/OR REPLACE, AND REFINISH AS REQUIRED TO RESTORE AREAS DAMAGED DURING CONSTRUCTION.
29. PROVIDE TEMPORARY FENCING TO PROTECT ALL WORK AREAS.
30. MINIMIZE REMOVAL OF EXISTING TREES. CONTRACTOR SHALL BE RESPONSIBLE FOR SITE LAYOUT, TAGGING AND REMOVAL OF TREES REQUIRED TO COMPLETE ALL WORK. OWNER SHALL APPROVE TREES TO BE REMOVED PRIOR TO ACTUAL REMOVALS. REMOVALS SHALL INCLUDE REMOVAL OF COMPLETE STUMP AND ROOT SYSTEM. CONTRACTOR SHALL NOT BE PERMITTED TO GRIND STUMPS.
31. CONCRETE SIDEWALKS AND CURBS SHALL BE SAWCUT BACK TO EXPANSION/CONTROL JOINTS.
32. THE ENGINEER'S ROLE IS NOT TO SUPERVISE, DIRECT, OR HAVE CONTROL OVER THE MEANS, METHODS, TECHNIQUES, SEQUENCES, OR PROCEDURES OF CONSTRUCTION SELECTED OR USED BY THE CONTRACTOR FOR SECURITY OR SAFETY AT THE SITE, FOR SAFETY PRECAUTIONS AND PROGRAMS INCIDENTAL TO THE CONTRACTOR'S WORK IN PROGRESS, NOR ANY FAILURE OF THE CONTRACTOR TO COMPLY WITH LAWS AND REGULATIONS APPLICABLE TO THE CONTRACTOR'S FURNISHING AND PERFORMING THE WORK AS SHOWN AND/OR SPECIFIED.
33. COMPLY WITH ALL OSHA REQUIREMENTS FOR CONFINED SPACE ENTRY WHENEVER IT IS NECESSARY FOR A CONTRACTOR'S EMPLOYEE TO ENTER A RIVERHEAD SEWER DISTRICT PROCESS TANK OR SANITARY MANHOLE. THE CONTRACTOR WILL NOT BE PERMITTED TO WORK INSIDE CONFINED SPACES WITHOUT COMPLYING TO ALL APPLICABLE OSHA STANDARDS INCLUDING, BUT NOT LIMITED TO:
    A. CONTRACTOR SHALL BE ISSUED AN "ENTRY PERMIT".
    B. CONTRACTOR SHALL UTILIZE AN ENTRY MONITOR FOR CONFINED SPACE AND ATMOSPHERIC CONDITIONS.
    C. CONTRACTOR SHALL UTILIZE RESCUE AND RETRIEVAL EQUIPMENT WHILE WORK IS BEING PERFORMED IN THE CONFINED SPACE.

UTILITY NOTES:

1. AS PER THE STANDARD GUIDELINE FOR THE CONSTRUCTION AND DEPICTION OF EXISTING SUBSURFACE UTILITY DATA CI/ASCE 38-02, THE SUBSURFACE UTILITY ENGINEERING (SUE) QUALITY LEVELS OF SERVICE (ACCURACY) IS QL-C = QUALITY LEVEL C. UTILITY INFORMATION OBTAINED FROM RECORD INFORMATION AND PLOTTED TO CORRELATE WITH SURFACE UTILITY FEATURES WHICH MAY HAVE BEEN SURVEY LOCATED AND ACCURATELY REDUCED ON DESIGN/CONSTRUCTION DOCUMENTS.
2. LOCATION OF ALL UNDERGROUND UTILITIES, ELECTRIC AND TELEPHONE CONDUITS, STORM DRAINS AND UNDERGROUND PIPING WERE OBTAINED FROM EITHER OLD MAPS, SURVEYS, DRAWINGS AND RECORDS SUPPLIED BY OTHERS. THE OWNER AND ENGINEER DO NOT GUARANTEE OR ACCEPT RESPONSIBILITY FOR ANY DAMAGE TO SUCH FACILITIES DUE TO DISCREPANCIES IN LOCATION AND SIZE SHOWN ON THE PLANS, NOR WILL ANY COMPENSATION BE MADE TO THE CONTRACTOR FOR ANY INCONVENIENCES CAUSED BY HIM BY ENCOUNTERING THE AFOREMENTIONED UTILITIES WHICH ARE NOT SHOWN, OR ARE INCORRECTLY SHOWN ON THE PLANS. THE CONTRACTOR IS RESPONSIBLE FOR DETERMINING THE LOCATIONS OF ANY UNDERGROUND UTILITIES, GAS MAINS, ELECTRIC AND TELEPHONE CONDUITS, SEE GENERAL NOTES.
3. LOCATION OF ALL UNDERGROUND UTILITIES, ELECTRIC AND TELEPHONE CONDUITS, STORM DRAINS AND UNDERGROUND PIPING SHALL BE MARKED OUT BY THE CONTRACTOR. THE CONTRACTOR IS RESPONSIBLE FOR DETERMINING THE LOCATION OF UNDERGROUND UTILITIES, GAS MAINS, ELECTRIC AND TELEPHONE CONDUITS. NO EXCAVATION SHALL COMMENCE UNTIL COMPLETE MARK-OUT HAS BEEN PERFORMED.
4. CONTRACTOR SHALL HAND DIG TO LOCATE AND EXPOSE EXISTING UTILITIES. ANY DAMAGE TO EXISTING UTILITIES MUST BE REPAIRED IMMEDIATELY BY THE CONTRACTOR AT NO COST TO THE OWNER.
5. THE CONTRACTOR IS RESPONSIBLE FOR DETERMINING THE EXACT LOCATION OF UNDERGROUND UTILITIES, GAS MAINS, WATER MAINS, ELECTRIC CONDUITS, TELEPHONE CONDUITS, FIBER OPTIC CONDUITS, DRAINAGE LINES, AND EXISTING SANITARY SEWER LINES. NO EXTRA COMPENSATION WILL BE MADE TO THE CONTRACTOR FOR ANY INCONVENIENCE CAUSED HIM/HER BY ENCOUNTERING THE AFOREMENTIONED UTILITIES. SHOULD IT BE NECESSARY, THE CONTRACTOR SHALL BE RESPONSIBLE FOR COORDINATING THE RELOCATION OF ANY UNDERGROUND UTILITIES WHICH CONFLICT WITH THE PROPOSED CONSTRUCTION IN ACCORDANCE WITH THE "RULES AND REGULATIONS GOVERNING THE ACCOMMODATION OF UTILITIES WITHIN THE STATE HIGHWAY RIGHT-OF-WAY."

SYMBOLS LEGEND	
℄	CENTERLINE
1 / G1.0	DETAIL KEY
1 TITLE SCALE: "= 1'-0"	DRAWING TITLE
N	NORTH ARROW
△1	REVISION TAG
1 / G1.0	SECTION CUT KEY

Dig Net of New York City & Long Island
www.dignetnyc.com
Dig Safely and Dig Safely . New York are used under license from Dig Safe System, Inc.
- Call Before You Dig
- Wait The Required Time
- Confirm Utility Response
- Respect The Marks
- Dig With Care

1-800-272-4480 or 811

H2M architects + engineers

538 Broad Hollow Road, 4th Floor East
Melville, NY 11747
631.756.8000 • www.h2m.com

CONSULTANTS:

MARK	DATE	DESCRIPTION

STATE OF NEW YORK · STEVEN C HEARL · No. 62108 · LICENSED PROFESSIONAL ENGINEER

"ALTERATION OF THIS DOCUMENT EXCEPT BY A LICENSED PROFESSIONAL IS ILLEGAL"

DESIGNED BY:	DRAWN BY:	CHECKED BY:	REVIEWED BY:
NFB/SCH	JJF	NFB	SCH

PROJECT No.:	DATE:	SCALE:
RDSD 18-01	JULY 2018	AS SHOWN

CLIENT

Town of Riverhead / Riverhead Sewer District

841 Old Country Road
Proposed Fuel Facility - Sewer Main & Easement Relocation

841 Old Country Road
Riverhead, NY 11901

CONTRACT
CONTRACT S
SEWERS

STATUS
FINAL BID DOCUMENT

SHEET TITLE
GENERAL NOTES

DRAWING No.
G1.0

SHEET No.
2 OF 4

C:\Users\sgovernale\appdata\local\temp\AcPublish_15536\G1.0 - GENERAL NOTES.dwg Last Modified: Jun 28, 2018 - 8:46am Plotted on: Jul 10, 2018 - 9:26am By sgovernale

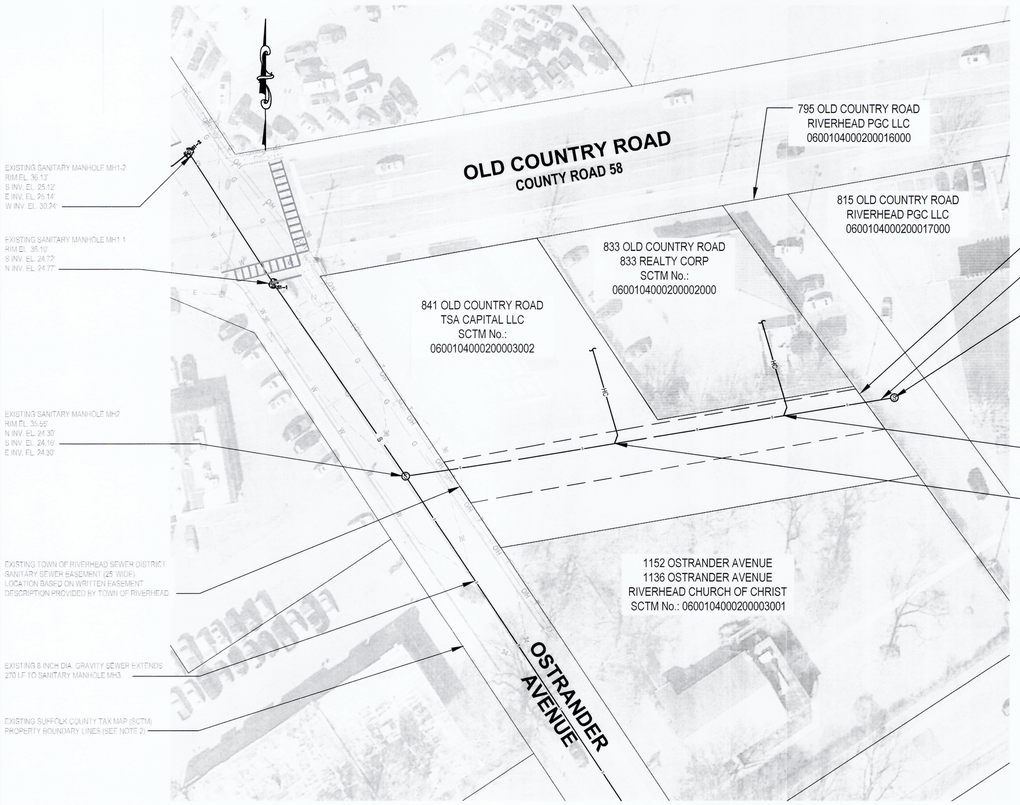

Existing Conditions Site Plan

GRAPHIC SCALE

-40 0 20 40

(IN FEET)
1 inch = 40 ft.

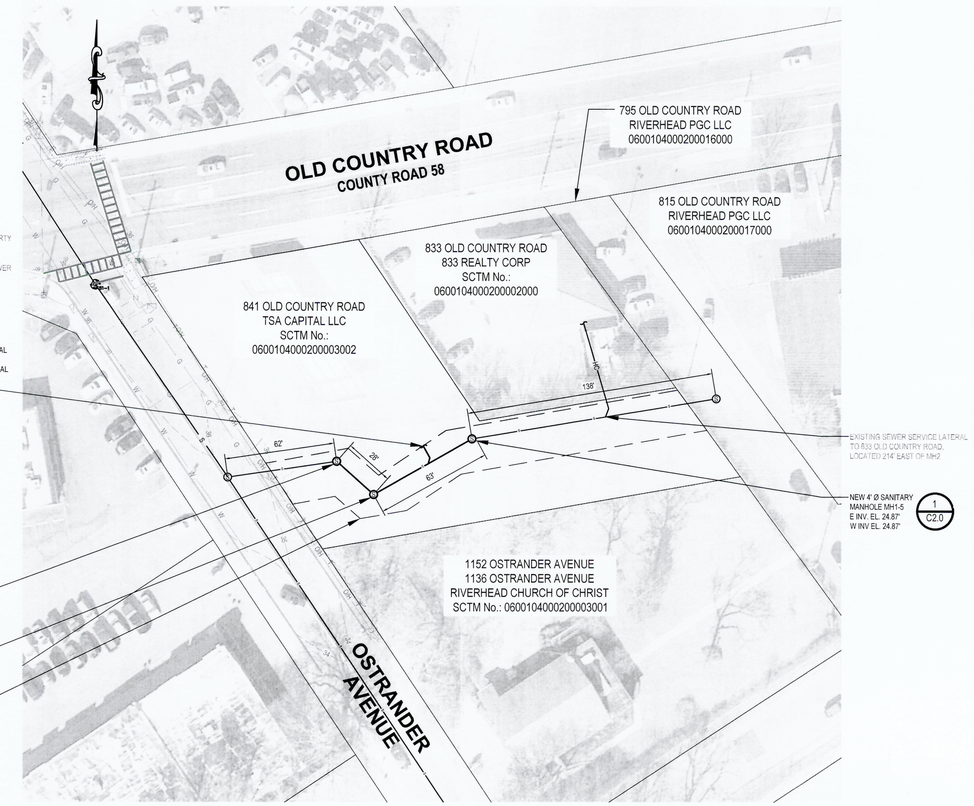

Easement & Sanitary Sewer Relocation Plan

GRAPHIC SCALE

-40 0 20 40

(IN FEET)
1 inch = 40 ft.

EXISTING CONDITIONS SURVEY NOTES:

1. AERIAL BACKGROUND IMAGERY WAS OBTAINED FROM THE NEW YORK STATE GIS CLEARINGHOUSE. WEBSITE: GIS.NY.GOV. AERIAL IMAGERY REPRESENTS 2016 CONDITIONS.
2. SUFFOLLK COUNTY TAX MAP (SCTM) PROPERTY BOUNDARY LINE INFORMATION WAS OBTAINED FROM NEW YORK STATE GIS CLEARINGHOUSE. WEBSITE: GIS.NY.GOV
3. EASEMENT BOUNDARY LOCATIONS SHOWN ARE APPROXIMATE AND SHOULD BE VERIFIED BY CONTRACTOR WITH RECORDS OBTAINED FROM TOWN OF RIVERHEAD.
4. EXISTING SANITARY MANHOLES #1 & #2 RIM ELEVATIONS AND INVERT ELEVATIONS SHALL BE VERIFIED BY CONTRACTOR PRIOR TO START OF NEW WORK.
5. EXISTING UTILITY SURVEY INFORMATION DEPICTED WITHIN THE OSTRANDER AVENUE RIGHT-OF-WAY AND OLD COUNTRY ROAD RIGHT-OF-WAY IS FROM A FIELD SURVEY PREVIOUSLY PERFORMED BY H2M ARCHITECTS + ENGINEERS (H2M) FOR THE TOWN OF RIVERHEAD IN JUNE 2016. THE LOCATIONS OF UNDERGROUND STRUCTURES AND UTILITIES SHOWN WITHIN BOTH RIGHT-OF-WAYS ARE BASED ON ABOVEGROUND FEATURES AND/OR RECORD DRAWINGS AND MARKOUT PROVIDED BY SINGER UTILITY ENGINEERING, P.C. IN JUNE, 2016. LOCATIONS OF UNDERGROUND STRUCTURES AND UTILITIES MAY VARY FROM LOCATIONS SHOWN HEREON. ADDITIONAL BURIED STRUCTURES AND UTILITIES MAY BE ENCOUNTERED. THE CONTRACTOR IS RESPONSIBLE FOR DETERMINING THE LOCATION OF ALL UNDERGROUND UTILITIES WITHIN THE LIMITS OF THE WORK AREA PRIOR TO CONSTRUCTION.
6. ELEVATIONS SHOWN HEREON REFER TO N.A.V.D. 1988.

EASEMENT & SANITARY SEWER MAIN RELOCATION NOTES:

1. ONSITE BUILDING FOUNDATION, SANITARY SEWER, STORM DRAIN & SITE IMPROVEMENT INFORMATION NOT SHOWN FOR CLARITY. REFER TO REFERENCE DOCUMENTS IN PROJECT MANUAL FOR COPY OF SITE IMPROVEMENTS PLAN PREPARED BY VHB ENGINEERING, SURVEYING, & LANDSCAPE ARCHITECTURE, P.C., DATED FEBRUARY 2, 2017.
2. EXISTING 8" Ø GRAVITY SEWER MAIN CROSSING THE SITE IS OWNED AND MAINTAINED BY RIVERHEAD SEWER DISTRICT.
3. FURNISH AND INSTALL THREE (3) PRECAST 4' Ø SANITARY MANHOLES AND TWO SEGMENTS OF 8" Ø DR-18 GRAVITY SEWER, AT APPROXIMATE LENGTHS OF 28' AND 63' AS SHOWN HEREON WITH A MINIMUM SLOPE OF 0.40%, TO OFFSET THE EXISTING SEWER AROUND THE NEW FUEL PUMP ISLAND PLANNED TO BE CONSTRUCTED ONSITE. THE SECTION OF EXISTING SEWER MAIN AND EXISTING SERVICE LATERAL LOCATED WITHIN THE EXISTING EASEMENT LIMITS BETWEEN NEW MANHOLES MH1-3 AND MH1-5 SHALL BE CUT, REMOVED AND PROPERLY DISPOSED OFFSITE BY CONTRACTOR. THE REMAINING SECTION OF SERVICE LATERAL PIPE LOCATED OUTSIDE OF THE EXISTING SEWER EASEMENT LIMITS SHALL BE LEFT IN PLACE FOR REMOVAL BY OTHERS.
4. FURNISH AND INSTALL ONE (1) 6" Ø BUILDING CONNECTION TO THE NEW 8" Ø DR-18 PVC GRAVITY SEWER AT LOCATION SHOWN. INSTALLATION OF BUILDING CONNECTION SHALL INCLUDE A 6" Ø PVC SERVICE STUB WITH CAP AT EASEMENT LINE FOR FUTURE CONNECTION TO BUILDING SANITARY DRAIN FURNISHED AND INSTALLED BY OTHERS.
5. FURNISH AND INSTALL TEMPORARY BYPASS PUMPING SYSTEM IN ACCORDANCE WITH SECTION 015120 - TEMPORARY SANITARY WASTEWATER CONVEYANCE TO MAINTAIN FLOW FROM 833 OLD COUNTRY ROAD TO THE COLLECTION SYSTEM UNTIL THE NEWLY REROUTED SEWER IS INSTALLED, TESTED AND ACCEPTED FOR BENEFICIAL USE BY TOWN OF RIVERHEAD SEWER DISTRICT.
6. FINAL SITE RESTORATION TO BE PERFORMED BY OTHERS/ CONTRACTOR SHALL BE REQUIRED TO BACKFILL AREAS EXCAVATED AND ROUGH GRADE AREAS DISTURBED BY WORK. CONTRACTOR SHALL INSTALL CASTINGS TO ELEVATION 38.00' TO BE ABOVE ROUGH GRADE ELEVATION TO SHED WATER AWAY FROM CASTING LOCATIONS DURING RAIN EVENTS. FINAL CASTING ADJUSTMENTS TO BE PERFORMED BY OTHERS.
7. ALL DEBRIS GENERATED BY CONTRACTOR DURING SEWER MAIN & EASEMENT RELOCATION SHALL BE REMOVED FROM SITE FOR OFFSITE DISPOSAL BY CONTRACTOR.
8. FURNISH SURVEY MAPPING WITH PROPOSED EASEMENT BOUNDARY FOR 25' WIDE RELOCATED EASEMENT WITH NEW SEWER LOCATION ALONG CENTERLINE. FINAL METES & BOUNDS EASEMENT DESCRIPTION SHALL BE FURNISHED AS PART OF AS-BUILT RECORD DRAWING SUBMISSION FOR CONTRACT CLOSE OUT.

H2M architects + engineers

538 Broad Hollow Road, 4th Floor East
Melville, NY 11747
631.756.8000 • www.h2m.com

CONSULTANTS:

MARK	DATE	DESCRIPTION

STATE OF NEW YORK · STEVEN C. HEAD · No. 62108 · LICENSED PROFESSIONAL ENGINEER

DESIGNED BY:	DRAWN BY:	CHECKED BY:	REVIEWED BY:
SCH/NFB	JJF	NFB	SCH
PROJECT No: RDSD 18-01	DATE: JULY 2018	SCALE: AS SHOWN	

CLIENT
Town of Riverhead / Riverhead Sewer District

841 Old Country Road
Proposed Fuel Facility - Sewer Main & Easement Relocation

TOWN OF RIVERHEAD · 1792 · PAX ET PROSPERITAS · PER PROGRESSUM

841 Old Country Road
Riverhead, NY 11901

CONTRACT
CONTRACT S
SEWERS

STATUS
FINAL BID DOCUMENT

SHEET TITLE
EXISTING CONDITIONS & PROPOSED SITE PLAN

DRAWING No. **C1.0**

SHEET No. 3 OF 4

C:\Users\governmale\appdata\local\temp\AcPublish_15536\C1.0 - Existing Conditions & Proposed Site Plan.dwg Last Modified: Jun 26, 2018 - 9:44am Plotted on: Jul 10, 2018 - 9:25am By: sgovernmale

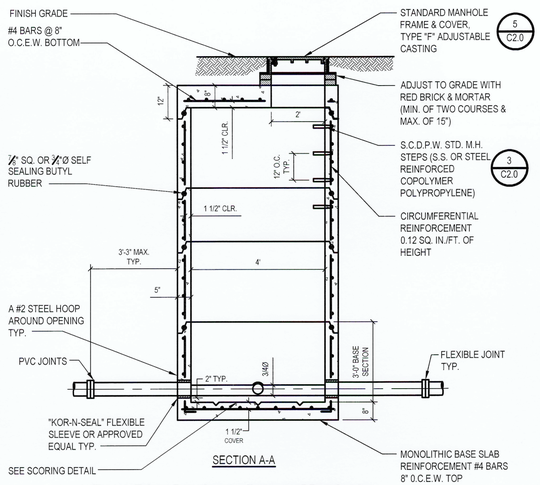

1 4-Foot Dia. Sanitary Sewer Manhole
SCALE: NTS

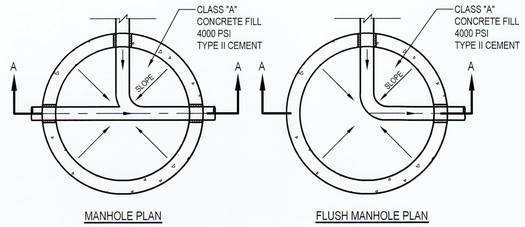

NOTES:

1. ALL MANHOLES SECTIONS SHALL CONFORM TO A.S.T.M. C-478, LATEST REVISION STANDARD SPECIFICATIONS FOR PRECAST REINFORCED CONCRETE M.H. SECTIONS.
2. MANHOLE RISER SECTION SHALL BE FURNISHED IN 1', 2', 3', OR 4' HEIGHTS AS REQUIRED.
3. MANUF. SHALL CERTIFY THAT MANHOLES DELIVERED MEET ALL REQUIREMENTS OF S.C.D.P.W. SPECS.
4. LOADING SHALL CONFORM TO AASHTO H-20 LOADING.
5. REBAR SHALL CONFORM TO ASTM A-615-60 Fs=60,000PSI.
6. WELDED WIRE MESH SHALL CONFORM TO A.S.T.M. A185 Fs=65,000PSI.
7. CONCRETE SHALL BE 4000PSI @ 28 DAYS
8. FLAT SLAB TOPS (NO JOINT) SHALL HAVE TOP & BOTTOM STEEL.

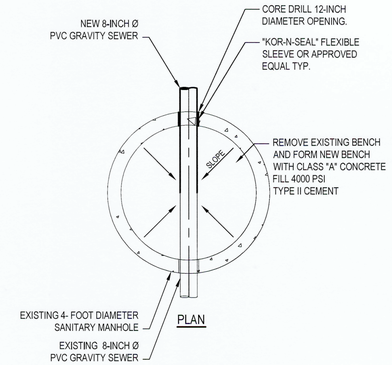

NOTES:

1. REFER TO PLANS FOR ANGLE BETWEEN INFLUENT AND EFFLUENT SEWER.

2 Gravity Sewer Connection to Existing Manhole
NO SCALE

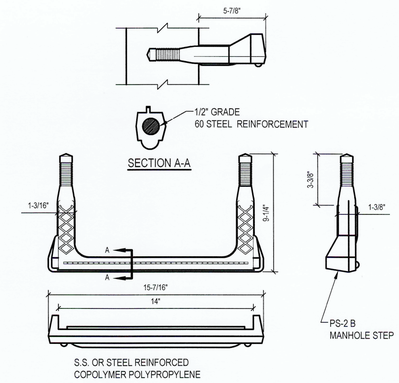

3 Structural Manhole Step Detail
NO SCALE

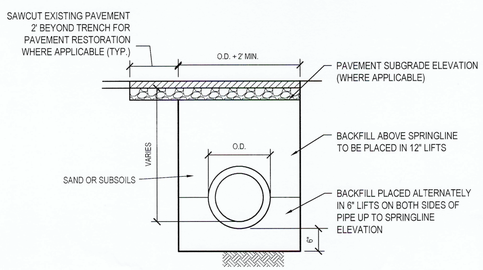

NOTES:

1. IF DEPTH OF TRENCH EXCEEDS 5', PROVIDE SHEETING AND BRACING OR A SHEETING BOX IN ACCORDANCE WITH OSHA REGULATIONS. AS AN ALTERNATIVE, IF PERMITTED BY THE ENGINEER, THE TRENCH WALLS MAY BE CUT BACK TO A 1:1 SLOPE OR THE NATURAL ANGLE OF REPOSE FOR THE SOIL, WHICHEVER IS GREATER.
2. WITHIN 9" OF PAVEMENT SUBGRADE ELEVATION (WHERE APPLICABLE) COMPACT BACKFILL TO 92% MAXIMUM DENSITY IN ACCORDANCE WITH ASTM D1557. COMPACT ALL OTHER BACKFILL MATERIAL TO 90% MAXIMUM DENSITY IN ACCORDANCE WITH ASTM D1557.

4 Pipe Trench
NTS (312333.00 H2MX1) - U

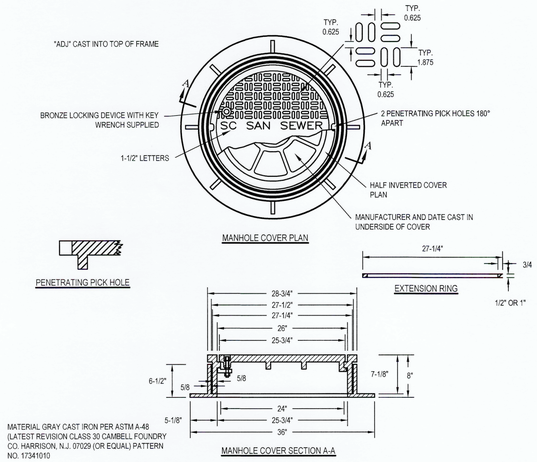

5 Suffolk County Type "F" Adjustable Manhole Casting
NTS

NOTE:
MINIMUM DEPTH IN EASEMENT 4'-0" EXCEPT AS ORDERED BY ENGINEER

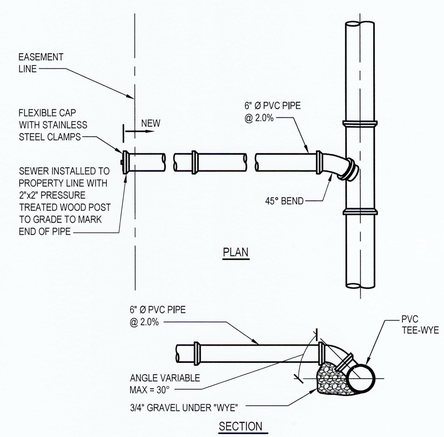

6 Building Connection Detail
NO SCALE

H 2 M architects + engineers

538 Broad Hollow Road, 4th Floor East
Melville, NY 11747
631.756.8000 • www.h2m.com

CONSULTANTS:

MARK	DATE	DESCRIPTION

STATE OF NEW YORK · STEVEN G. HEALY · No. 62108 · LICENSED PROFESSIONAL ENGINEER

DESIGNED BY	DRAWN BY	CHECKED BY	REVIEWED BY
SCH/NFB	JJF	NFB	SCH
PROJECT No. RDSD 18-01	DATE JULY 2018	SCALE AS SHOWN	

CLIENT
Town of Riverhead / Riverhead Sewer District

841 Old Country Road
Proposed Fuel Facility - Sewer Main & Easement Relocation

841 Old Country Road
Riverhead, NY 11901

CONTRACT
CONTRACT S
SEWERS

STATUS
FINAL BID DOCUMENT

SHEET TITLE
SEWER AND MANHOLE DETAILS

DRAWING No. C2.0

SHEET No. 4 OF 4

C:\Users\governale\appdata\local\temp\AcPublish_15556\C2.0 - SEWER AND MANHOLE DETAILS.dwg Last Modified: Jun 26, 2018 - 8:46am Plotted on: Jul 10, 2018 - 9:24am By:ggovernale