water

CONTRACT AND SPECIFICATIONS

RIVERHEAD WATER DISTRICT
TOWN OF RIVERHEAD
SUFFOLK COUNTY, NEW YORK

INSTALLATION OF WATER MAINS & APPURTENANCES

OLD ORCHARD SUBDIVISION

Project No: RDWD 16-51

TOWN SUPERVISOR
Sean Walter

TOWN COUNCIL
John Dunleavy
Jodi Giglio
Timothy Hubbard
James Wooten

TOWN CLERK
Diane Wilhelm

SUPERINTENDENT
Mark Conklin

JANUARY 2017

H2M architects + engineers
538 Broad Hollow Rd, Melville, NY 11747
tel 631.756.8000 fax 631.694.4122

www.h2m.com

RIVERHEAD WATER DISTRICT
TOWN OF RIVERHEAD

INSTALLATION OF WATER MAINS & APPURTENANCES
OLD ORCHARD SUBDIVISION
H2M PROJECT NO.: RDWD 16-51

JANUARY 2017

FRONT END

	INDEX
001113	NOTICE TO BIDDERS
002113	INFORMATION TO BIDDERS
004105	BIDDER'S DECLARATION
004118	PROPOSAL
004313	BID SECURITY
004355	INDEMNITY, LIMITATION OF LIABILITY
004519	NON-COLLUSIVE BIDDING CERTIFICATE
004546	UNIFORM CONTRACTING QUESTIONNAIRE
004550	QUALIFICATION OF BIDDERS
004555	CONTRACTOR'S RESPONSIBILITY
005209	CONTRACT
006295	IRANIAN INVESTMENT ACTIVITIES CERTIFICATION
007305	GENERAL CONDITIONS
007306	GENERAL SPECIFICATIONS
007343	WAGE RATES

TECHNICAL SPECIFICATIONS

DIVISION 1 - GENERAL REQUIREMENTS

011100	SUMMARY OF WORK
011400	WORK RESTRICTIONS
012200	UNIT PRICES
012500	PRODUCT SUBSTITUTION PROCEDURES
012900	PAYMENT PROCEDURES
013100	PROJECT MANAGEMENT AND COORDINATION
013216	CONSTRUCTION SCHEDULE
013300	SUBMITTALS
014100	REGULATORY REQUIREMENTS
015719	TEMPORARY ENVIRONMENTAL CONTROLS
016100	BASIC PRODUCT REQUIREMENTS
016500	PRODUCT DELIVERY, STORAGE AND HANDLING
017800	CLOSEOUT SUBMITTALS

DIVISION 31 - EARTHWORK

312323	BACKFILLING
312333	TRENCHING
315000	EXCAVATION SUPPORT & PROTECTION

DIVISION 32 – EXTERIOR IMPROVEMENTS

321123	AGGREGATE BASE COURSE
321216	ASPHALT PAVING

329119 TOPSOIL PLACEMENT AND GRADING
329219.16 HYDROSEEDING

DIVISION 33 - UTILITIES

330564 PRECAST CONCRETE UTILITY VAULT
331300 DISINFECTION OF WATER UTILITY DISTRIBUTION
331411 WATER UTILITY DISTRIBUTION PIPING
331417 WATER SERVICE CONNECTIONS
331419 WATER UTILITY DISTRIBUTION FIRE HYDRANTS

DIVISION 40 – PROCESS INTEGRATION

330564 VALVES AND VALVE ACCESSORIES

END OF INDEX

SECTION 001113 – NOTICE TO BIDDERS

The Town Board of Riverhead will receive bids for the **"Installation of Water Mains and Appurtenances, Old Orchard Subdivision"** for the Riverhead Water District at the Town Clerk's office, Town Hall, 200 Howell Avenue, Riverhead, New York 11901, until **2:00 P.M.**, on **Thursday**, **February 9, 2017** at which time and place all bids will be publicly opened and read aloud for:

PROJECT NO.: RDWD 16-51

Installation of Water Mains and Appurtenances

Old Orchard Subdivision

Plans and specifications may be examined on or after *Thursday, January 26, 2017* by visiting the Town of Riverhead website: http://townofriverheadny.gov and click on "Bid Requests". Plans and specifications are available in electronic format only from the aforementioned website.

Each proposal must be accompanied by a bid bond in the amount of five percent (5%) of the total bid, or a certified check made payable to the TOWN OF RIVERHEAD as assurance that the bid is made in good faith.

The right is reserved to reject any or all bids, to waive any informality, and to accept the lowest responsible bid.

BY ORDER OF THE TOWN BOARD
TOWN OF RIVERHEAD
SUFFOLK COUNTY, NEW YORK

ACTING AS THE GOVERNING BODY
OF THE RIVERHEAD WATER DISTRICT

TOWN CLERK, TOWN OF RIVERHEAD

DATED: January 26, 2017

SECTION 002113 – INFORMATION FOR BIDDERS

BIDS FOR PROJECT

The Town of Riverhead, at the Town Clerk's office, will receive SEALED PROPOSALS for:

RIVERHEAD WATER DISTRICT

INSTALLATION OF WATER MAINS & APPURTENANCES
OLD ORCHARD SUBDIVISION

PROJECT NO.: RDWD 16-51

TIME AND PLACE OF BID

Bids are to be submitted in sealed opaque envelopes, and will be received by the Town of Riverhead, at the Town Clerk's office, Town Hall, 200 Howell Avenue, Riverhead, New York, not later than **2:00 P.M.** prevailing time, on **Thursday, February 9, 2017** at which time and place they will be publicly opened and read aloud. Use of the mails shall be at the Bidder's own risk, and the Bidder shall be responsible for physical delivery of the bid at the time and place set for opening of bids.

BID ENVELOPE

All proposals and either the certified check or bid bond must be placed in a sealed opaque envelope bearing the Bidder's firm name and address and marked, "PROJECT NO.: RDWD 16-51, INSTALLATION OF WATER MAINS & APPURTENANCES, OLD ORCHARD SUBDIVISION FOR THE RIVERHEAD WATER DISTRICT, TOWN OF RIVERHEAD, SUFFOLK COUNTY, NEW YORK", but otherwise unmarked. Bid package shall include Proposal sheets, Qualifications of Bidder sheets, Approval of Subcontractor sheets, and the New York State Uniform Contracting Questionnaire.

PLANS AND SPECIFICATIONS

Plans and specifications may be examined on or after **Thursday, January 26, 2017** at the Office of the Town Clerk between the hours of 8:30 am and 4:30 pm weekdays, except holidays or by visiting the Town of Riverhead website: http://townofriverheadny.gov and click on “Bid Requests”.

Plans and specifications are available from the aforementioned Town of Riverhead website only. All contractors who intend to submit a bid package are required to register on the web site.

VERBAL ANSWERS

The Town Board, its agents, servants or employees, or the Engineer, will not be responsible in any manner for verbal answers to any inquiries regarding the meaning of the contract drawings or Specifications given prior to the awarding of the contract.

EXAMINATION OF SITE

Bidders must satisfy themselves by personal examination of the location of the proposed work and of the actual conditions and requirements of the work and shall not, at any time after the submission

of a proposal, dispute or complain of such estimate or assert that there was any misunderstanding in regard to the depth or character of excavation to be made or the nature of the work to be done.

PROPOSAL

The Proposal contained herein shall be used in making out bids. Any proposal not in accordance with these instructions or containing bids not asked for may be rejected. While separate prices are required for various items under this contract, it is understood that the contract will be awarded as a whole.

As the estimates of quantities of items stated in the Proposal are approximate only, bidders are required to submit their proposal upon and in the following express conditions, which shall apply and become part of every proposal received.

Bids will be compared by total amounts, said total amount being the sum of the products of the quantities multiplied by the unit price bid for the various items, with due consideration being given to the lump sum prices bid for any contingent or optional items. Unbalanced bids will not be accepted.

Each bidder shall fill out in ink, in both words and figures, in the spaces provided, its unit or lump sum bid, as the case may be, for each item in said Proposal for which it is submitting a bid. If there is any discrepancy between the prices in words and figures, the prices in words shall govern as unit and lump sum prices.

A bid which does not include bids for all items in the Proposal may not be considered valid.

If the contract is not awarded by the Town Board within ninety (90) days after the receipt of bids, the obligation of the bidder under this Proposal may terminate at its option and it shall thereupon be entitled to a refund of its certified check or release of its bid bond furnished by it as security with its proposal.

BID BOND OR CERTIFIED CHECK

Each proposal from a Contractor shall be accompanied by a bid bond or certified check on a solvent bank of the STATE OF NEW YORK, in the amount of five percent (5%) of the total bid. Such check shall be made payable to TOWN OF RIVERHEAD, RIVERHEAD, NEW YORK, and the amount thereof shall be the measure of liquidated damages which the Town may sustain by failure, neglect or refusal of the bidder to execute and deliver the contract, should the contract be awarded to it. The checks of all unsuccessful bidders will be returned upon the rejection of bids and the awarding of the contract; also, the check of the successful bidder will be returned upon the execution of the contract and the furnishing of the required bond.

NAME OF BIDDER

Each bidder must state, in its proposal, its full name and business address, and the full name of every person, firm or corporation, interested in same, and the address of every person or firm, or president and secretary of every corporation, interested with it.

QUALIFICATIONS OF BIDDERS

(1) The Town Board reserves the right to waive any informalities in, or reject any and all bids. The Board reserves the right to reject any and all bids which do not conform to the Proposal.

(2) All bidders must prove to the satisfaction of the Town Board that they are reputable, reliable and responsible, and that they possess the necessary qualifications (financial, labor, equipment and otherwise) to complete successfully the proposed work.

(3) In determining the qualifications of a bidder, the Town Board will consider its record in the performance of any contracts entered into by it for the work contemplated or of similar nature, may make such investigation as it deems necessary to determine the ability of the bidder to perform the work, and the bidder shall furnish to the Board all such information and data for this purpose as the Town Board may request.

(4) The Town Board shall be the sole judge of the qualifications of the bidders and of the merits thereof and reserves the right to reject any bid if the record of the bidder in the performance of contracts, payment of bills and meeting of obligations to subcontractors, material men or employees is not satisfactory to the Town Board, or if the evidence submitted by, or the investigation of, such bidders fails to satisfy the Town Board that it is properly qualified to carry out the obligations of the contract and to complete the work contemplated therein.

PERFORMANCE AND MAINTENANCE BOND

The Contractor shall furnish a Performance Bond, Labor and Materials Bond, and a one (1) year Maintenance Bond each in an amount equal to one hundred (100%) percent of the total contract price as security for its faithful performance of this contract, for the payment of all persons performing labor or furnishing materials in connection with this contract. Such bonds shall also cover any penalties, interest charges and assessments levied by any governmental unit for failure to comply with laws and/or regulations governing public work. The Maintenance Bond shall be an assurance that all work and materials provided under this contract shall be maintained for a minimum period of one (1) year. The Maintenance Bond shall be furnished following final completion, and payment under the contract. The contractor shall be required to furnish all guarantees and warranties of manufacturers of products in connection with this contract, but no manufacturer's limitation of time shall act to limit the responsibility of the contractor or its surety hereunder.

The surety must be licensed in the State of New York and have a BEST A rating, or the surety shall present information satisfactory to the TOWN/DISTRICT to permit the TOWN/DISTRICT to accept the bond.

At the time of submission of bonds or at any time thereafter, the TOWN/DISTRICT may evaluate the surety or sureties proposed, and demand a change of surety if it determines that the financial position of such surety does not provide for a proper protection of the interests of the TOWN/DISTRICT. The TOWN/DISTRICT shall be guided by its legal counsel, and insurance industry consultants in determining proper sureties for TOWN/DISTRICT public works contracts. If the TOWN/DISTRICT notifies the contractor in writing that a surety is unacceptable for any reason, then the contractor shall replace the surety and the bond in question within five (5) business days with a surety and bond deemed suitable by the said TOWN/DISTRICT. The premiums charged for all such bonds shall be a cost of the contractor and not the TOWN/DISTRICT. Upon notice to change surety being forwarded to a contractor, no further payments shall be made until a new bond in proper form naming an acceptable surety is provided.

SIGNATURE OF CONTRACTOR

The bidder to whom a contract may be awarded shall attend at the office of the Town Board, with the sureties offered by it, within seven (7) days, Saturdays and Sundays excepted, after date of notification of the acceptance of its proposal, and there sign the contract in quadripartite for the work and furnish approved security for its performance.

In case of failure to do so, the bidder shall be considered as having abandoned the same, and the check accompanying its proposal shall be forfeited to the Town Board, or the penalty of the bid bond shall be invoked.

CONTRACTOR'S INSURANCE

The Contractor shall not commence any work until it has obtained and had approved by the Town all of the insurance specified and required by the Contract.

The Contractor shall not permit any subcontractor to commence any operation on the site until satisfactory proof of carriage of the above required insurance has been posted with, and approved by, the Town Board.

RESPONSIBILITY OF BIDDER

Attention is hereby particularly directed to the provisions of the contract whereby the Contractor will be responsible for any loss or damage that may happen to the work or any part thereof during its progress; and also whereby the Contractor shall make good any defects or faults that may occur during the progress of the work or within twelve (12) months after date of the Engineer's approval of the final payment request.

LABOR RATES

The Contractor shall pay not less than the minimum hourly wage rates on this contract as established in accordance with Section 220 of the Labor Law, as shown on the Wage Schedule and Prevailing Rate Schedule, either shown on the following pages or the current prevailing rates paid at the time of construction.

Each bidder shall submit with its bid a separate sealed list that names each subcontractor that the bidder will use to perform work on the contract, and the agreed-upon amount to be paid to each, for: (i) plumbing and gas fitting, (ii) steam heating, hot water heating, ventilating and air conditioning apparatus and (iii) electric wiring and standard illuminating fixtures. After the low bid is announced, the sealed list of subcontractors submitted with such low bid shall be opened and the names of such subcontractors shall be announced, and thereafter any change of subcontractor or agreed-upon amount to be paid to each shall require the approval of the owner, upon a showing presented to the owner of legitimate construction need for such change, which shall be open to public inspection. Legitimate construction need shall include, but not be limited to, a change in project specifications, a change in construction material costs, a change to subcontractor status as determined pursuant to paragraph (e) of subdivision two (2) of section two hundred twenty-two (222) of the labor law, or the subcontractor has become otherwise unwilling, unable or unavailable to perform the subcontract. The sealed lists of subcontractors submitted by all other bidders shall be returned to them unopened after the contract award.

COMPLETION OF WORK

Work is required to be completed to the satisfaction of the Engineer, and in substantial accordance with the Specifications hereunto annexed and the Plans therein referred to and the Change Orders amended to the Contract.

RESPONSIBILITY OF CONTRACTOR

Attention is hereby particularly directed to the provisions of the contract whereby the Contractor will be responsible for any loss or damage that may happen to the work or any part thereof during its progress; and also whereby the Contractor shall make good any defects or faults that may occur during the progress of the work or within twelve (12) months after its completion and acceptance. Any progress

payments made by the Town during the completion of this contract by the Contractor shall not be a waiver of the foregoing provision.

TOWN BOARD
TOWN OF RIVERHEAD
SUFFOLK COUNTY, NEW YORK

END OF SECTION 002113

SECTION 004105 – BIDDER'S DECLARATION

TO THE TOWN COUNCIL
RIVERHEAD WATER DISTRICT

For the furnishing and installing of materials for all work included under contract as follows:

Made this day of _____, by

_____

_____

_____

BIDDER'S DECLARATION:

The party named as Bidder declares that the only person or persons interested in this bid or proposal as principal or principals is or are named herein; and that no other person than herein named has any interest in this proposal or in the contract proposed to be taken; that this bid or proposal is made without any connections with any other person and persons making a bid or proposal for the same purpose; that the bid or proposal is in all respects fair and without collusion or fraud; that it has examined the site of the work, the contract and specifications and the drawings referred to; and has read the Information for Bidders hereto attached; and it proposes and agrees, if this proposal is accepted, it will contract in the form as approved to perform all the work mentioned in said contract and specifications; and it will accept in full payment therefore the following sums to wit:

END OF SECTION 004105

SECTION 004118 – PROPOSAL

Gentlemen:

The undersigned hereby offers to furnish all labor, equipment, materials and appurtenances for Installation of Water Mains & Appurtenances – Old Orchard Subdivision, all in accordance with the plans and specifications prepared by H2M architects + engineers for the following individual and lump sum prices:

ITEM 1A

Furnish & Install 6" Cement-Lined Ductile Iron Water Main
Push-on Joint, Special Class 52
Approximately 75 linear feet.

Price per LF _____($)
DOLLARS

TOTAL _____($)
DOLLARS

ITEM 1B

Furnish & Install 8" Cement-Lined Ductile Iron Water Main
Push-on Joint, Special Class 52
Approximately 3,100 linear feet.

Price per LF _____($)
DOLLARS

TOTAL _____($)
DOLLARS

ITEM 2

Furnish and Install Mechanical Joint C.L.D.I. Castings.
Approximately 7,000 pounds.
(Quantities based on C153 weights)
** Min. Unit Bid $1.00 **

Price per LB _____($)
DOLLARS

TOTAL _____($)
DOLLARS

ITEM 3A

Furnish and Install 6” Mechanical Joint Gate Valve with Box and Retainer Glands. Approximately 5 units.

Price per UNIT _____($)
DOLLARS

TOTAL _____($)
DOLLARS

ITEM 3B

Furnish and Install 8” Mechanical Joint Gate Valve with Box and Retainer Glands. Approximately 10 units.

Price per UNIT _____($)
DOLLARS

TOTAL _____($)
DOLLARS

ITEM 3D

Furnish and Install 12” Mechanical Joint Gate Valve with Box and Retainer Glands. Approximately 1 unit.

Price per UNIT _____($)
DOLLARS

TOTAL _____($)
DOLLARS

ITEM 4A

Furnish and Install Hydrant (Mechanical Joint Inlet) with rods and retainer glands. Approximately 5 units.

Price per UNIT _____($)
DOLLARS

TOTAL _____($)
DOLLARS

ITEM 5

Chlorination, Flushing and Testing of Water Mains.
Approximately 3,175 linear feet.
** Min. Unit Bid $1.00 **

Price per LF _____($)
DOLLARS

TOTAL _____($)
DOLLARS

ITEM 7
Permanent Blowoff Assembly.
Approximately 1 unit.

Price per UNIT _____($)
DOLLARS

TOTAL _____($)
DOLLARS

ITEM 8B
Cut-in to Existing 8" Water Main.
Approximately 1 unit.

Price per UNIT _____($)
DOLLARS

TOTAL _____($)
DOLLARS

ITEM 8D
Cut-in to Existing 12" Water Main.
Approximately 1 unit.

Price per UNIT _____($)
DOLLARS

TOTAL _____($)
DOLLARS

ITEM 9

Trench Compaction.
Approximately 3,175 linear feet.
** Min. Unit Bid $1.00 **

Price per LF _____($)
DOLLARS

TOTAL _____($)
DOLLARS

ITEM 10A
Repaving Town of Riverhead Roadway incl. permitting, saw cutting, removals, installation of base and wearing course asphalt, sealing and re-striping.
Approximately 175 square yards.
** Minimum Unit Bid $20.00 **

Price per SY _____($)
DOLLARS

TOTAL _____($)
DOLLARS

ITEM 14
Furnish & Place 2" clean topsoil and restore disturbed areas with hydro-seed.
Approximately 100 linear feet.
** Minimum Unit Bid $1.00 **

Price per LF _____($)
DOLLARS

TOTAL _____($)
DOLLARS

ITEM 26A
Moving Fee (Re-Mobilization)
* Fixed Price *

LUMP SUM _____One Thousand Five Hundred and 00/100_____($ 1,500.00)
DOLLARS

ITEM 28
All work and materials associated with the installation of new precast concrete vault, 8-inch hydraulic control valve, piping and fittings inside new vault, aluminum access ladder and double leaf aluminum hatch, as shown on the Plans and/or as described in the Specifications.
Approximately 1 unit.

Price per UNIT _____($)
DOLLARS

TOTAL _____($)
DOLLARS

ITEM 29

Furnish & Install 2" hot-mix asphalt including maintenance and removal.
Approximately 100 linear feet
** Min. Unit Bid $1.00 **

Price per LF _____($)
DOLLARS

TOTAL _____($)
DOLLARS

ITEM 30A
Furnish & Install new 1" water services (Complete, including all items shown on the plans and specified) Approximately 27 units.

Price per UNIT _____($)
DOLLARS

TOTAL _____($)
DOLLARS

TOTAL BID (Sum of All Items):

_____

_____($)
DOLLARS

BIDDER: _____

BIDDER'S ADDRESS: _____

_____

SIGNED BY: _____TITLE: _____

PRINT NAME: _____DATE: _____

PHONE: _____ FAX: _____

E-MAIL: _____

FEDERAL I.D. NO.:_____

THE TOWN OF RIVERHEAD/RIVERHEAD WATER DISTRICT RESERVES THE RIGHT TO AWARD THIS CONTRACT BASED ON EITHER THE TOTAL BID OR ANY COMBINATION OF ITEMS. THE TOWN/DISTRICT RESERVES THE RIGHT TO REJECT ANY OR ALL BIDS.

WITHIN TEN (10) DAYS (SUNDAYS AND LEGAL HOLIDAYS EXCEPTED) AFTER ACCEPTANCE OF THIS BID BY THE TOWN/DISTRICT, THE BIDDER SHALL EXECUTE THE CONTRACT. THE BIDDER SHALL FURNISH THE REQUIRED BONDS AND INSURANCES TO THE WATER DISTRICT'S ATTORNEY WITHIN THE SAME TIME FRAME.

SCHEDULE OF WORK

ALL CONTRACT WORK INCLUDED WITHIN EACH PHASE SHALL BE COMPLETED WITHIN SIXTY (60) CONSECUTIVE CALENDAR DAYS AFTER THE DATE OF THE NOTICE TO PROCEED. A NOTICE TO PROCEED WILL BE ISSUED AND WILL INCLUDE THE COMPLETION DATE.

FAILURE OF THE CONTRACTOR TO COMPLETE ALL WORK WITHIN THE SPECIFIED TIME PERIOD WILL SUBJECT HIM TO LIQUIDATED DAMAGES AS SET FORTH IN THE CONTRACT, IN THE SUM OF FIVE HUNDRED DOLLARS ($500.00) PER DAY, COMMENCING WITH THE 61ST DAY AS SET FORTH IN THE NOTICE TO PROCEED.

SPECIFIC DAMAGES WILL BE ASSESSED AND DEDUCTED FROM AMOUNTS OTHERWISE DUE THE CONTRACTOR FOR ADDITIONAL INSPECTION AND CONTRACT MANAGEMENT TIME REQUIRED BEYOND THE COMPLETION PERIODS ESTABLISHED. SUCH DEDUCTION SHALL BE NO LESS THAN $100.00 PER DAY AND NO MORE THAN $400.00 PER DAY.

THE BIDDER REPRESENTS HEREWITH THAT HE IS AWARE OF THE WORKING CONDITIONS, HAS CAREFULLY REVIEWED THE PROPOSAL AND SPECIFICATIONS, HAS CHECKED AND CERTIFIES THE ACCURACY OF THE BID.
WORK SHALL NOT PROCEED UNTIL THE RIVERHEAD WATER DISTRICT RECEIVES ALL REGULATORY APPROVALS. AWARD OF CONTRACT SHALL BE CONTINGENT UPON APPROVAL BY SUFFOLK COUNTY DEPARTMENT OF HEALTH.

THE CONTRACTOR SHALL COORDINATE ALL WORK WITH THE DISTRICT TO MINIMIZE DISTURBANCES TO DISTRICT OPERATIONS.

PROPOSED DUCTILE IRON PIPE MANUFACTURER:_____

PROPOSED GATE VALVE MANUFACTURER:_____

PROPOSED HYDRANT MANUFACTURER:_____

THE UNDERSIGNED HEREBY ALSO ACKNOWLEDGES RECEIPT OF THE FOLLOWING ADDENDA, IF ANY:

ADDENDUM NO.	**DATED**
_____	_____
_____	_____

TELEPHONE NUMBER WHERE THE CONTRACTOR OR A COMPETENT REPRESENTATIVE CAN ACCEPT A TELEPHONE MESSAGE AND PROVIDE A REASONABLE REPLY AS SOON AS POSSIBLE, WITHIN 24 HOURS OF BEING CONTACTED.

DAY: (_____)_____ NIGHT: (_____)_____

EMERGENCY: (_____)_____ FAX: (_____)_____

END OF SECTION 004118

SECTION 004313 - BID SECURITY

Enclosed is a certified check or bid bond for five percent (5%) of the total amount of the bid as required by the foregoing "Information for Bidders."

The Bidder hereby agrees to appear with its sureties at the office of the Town of Riverhead, Town Clerk's office within ten (10) days (Sundays excepted) after due notice from the Town Board that the contract has been awarded to it and is ready for signature; such notice to be given in writing within thirty (30) days of opening of the bids (unless a moving fee is contained on the Proposal pages, and then to the last time interval of any moving fee contained on the Proposal pages); and, on the signing of such contract by the Bidder, to furnish the indemnifying bonds as provided in the General Conditions.

The Bidder hereby further agrees that in the event of its failure or refusal to enter into a contract in accordance with this bid within ten (10) days (Sundays excepted) after due notice from the Town Board that the contract has been awarded to it and is ready for signature, as given in accordance with the Information for Bidders and/or its failure to execute and deliver the bond for the full amount of the contract price, as provided in said Information for Bidders, the Bidder's check or bid bond which is herewith deposited with the Town Board shall (at the option of said Board) become due and payable as ascertained and liquidated damages for such default; otherwise, said check or bid bond will be returned to the undersigned.

The full names and residences of all persons and parties interested in the foregoing bid as principals are as follows:

NAME	ADDRESS
_____	_____
_____	_____
_____	_____

NAME OF BIDDER: _____

BUSINESS ADDRESS OF BIDDER: _____

DATED AT:_____THE_____DAY OF_____, 20 ____.

SECTION 004355 - INDEMNITY, LIMITATION OF LIABILITY

1.0 - INDEMNITY

The Contractor and all subcontractors performing work in connection with this Contract shall HOLD HARMLESS, INDEMNIFY and DEFEND the Owner and Engineer, their consultants and each of their officers, agents and employees from any liability, claims, losses or damage including reasonable costs of defense arising out of or alleged to arise from the Contractor's or subcontractor's negligence in the performance of the work described in the Contract Documents, but not including liability that may be due to the sole negligence of the Owner, the Engineer or their officers, agents and employees.

2.0 - LIMITATION OF LIABILITY

The Contractor and all subcontractors agree to limit the liability of the Owner and the Engineer due to the Engineer's professional negligent errors or omissions such that the total aggregate liability of the Engineer to those named shall not exceed Fifty Thousand Dollars ($50,000) or five percent (5%) of the Contract award amount, whichever is greater.

3.0 - NO CLAIM FOR DELAY

The Contractor and all subcontractors agree to HOLD HARMLESS from any and all claims for loss or damages of any nature against the Owner or Engineer for delays in commencement, performance or completion of the Contract, regardless of whether said delays are, or may be, caused by the Owner, Engineer or any governmental agency.

END OF SECTION 004355

SECTION 004519 - NON-COLLUSIVE BIDDING CERTIFICATE

Pursuant to Section 103-D of the General Municipal Law, the Contractor makes the following statement under penalty of perjury, and by submission of this bid or proposal, the bidder certified that:

(a) This bid or proposal has been independently arrived at without collusion with any other bidder or with any competitor or potential competitor; (b) this bid or proposal has not been knowingly disclosed and will not be knowingly disclosed prior to the opening of the bids or proposals for this project to any other bidder, competitor or potential competitor; (c) no attempt has been or will be made to induce any other person, partnership or corporation to submit or not to submit a bid or proposal; (d) the person signing this bid or proposal certifies that he/she has fully informed him or herself regarding the accuracy of the statements contained in this certification and, under penalties of perjury, affirms the truth thereof, such penalties being applicable to the bidder as well as to the person signing in its behalf; (e) that attached hereto (if a corporate bidder) is a certified copy of resolution authorizing the execution of this certificate by the signatory of this bid or proposal on behalf of the corporate bidder.

Resolve that _____ be authorized
NAME OF CORPORATION

to sign and submit the bid or proposal of this corporation for the following project:

INSTALLATION OF WATER MAIN & APPURTENANCES, OLD ORCHARD SUBDIVISION

and to include in such bid or proposal the certificate as to non-collusion required by Section 103-D of the General Municipal Law as the act and deed of such corporation, and for any inaccuracies or misstatements in such certificate, this corporate bidder shall be liable under the penalties of perjury. The foregoing is a true and correct copy of the resolution adopted by _____ at a meeting of its Board of Directors held on the _____ day of _____, 20____.

(Seal of the Corporation)

Secretary: _____

RESPECTIVELY SUBMITTED:

Firm Name: _____

Address: _____

_____

Signed By: _____

Title: _____

END OF SECTION 004519

SECTION 004546 - UNIFORM CONTRACTING QUESTIONNAIRE

NEW YORK STATE VENDOR RESPONSIBILITY QUESTIONNAIRE
FOR-PROFIT CONSTRUCTION (CCA-2)

You have selected the For-Profit Construction questionnaire, commonly known as the "CCA-2," which may be printed and completed in this format or, **for your convenience**, **may be completed online using the New York State VendRep System.**

COMPLETION & CERTIFICATION

The person(s) completing the questionnaire must be knowledgeable about the vendor's business and operations. An owner or official must certify the questionnaire and the signature must be notarized.

NEW YORK STATE VENDOR IDENTIFICATION NUMBER (VENDOR ID)

The Vendor ID is a ten-digit identifier issued by New York State when the vendor is registered on the Statewide Vendor File. This number must now be included on the questionnaire. If the business entity has not obtained a Vendor ID, contact the IT Service Desk at ITServiceDesk@osc.state.ny.us or call 866-370-4672.

DEFINITIONS

All underlined terms are defined in the "New York State Vendor Responsibility Definitions List," found at http://www.osc.state.ny.us/vendrep/documents/questionnaire/definitions.pdf. These terms may not have their ordinary, common or traditional meanings. Each vendor is strongly encouraged to read the respective definitions for any and all underlined terms. By submitting this questionnaire, the vendor agrees to be bound by the terms as defined in the "New York State Vendor Responsibility Definitions List" existing at the time of certification.

RESPONSES

Every question must be answered. Each response must provide all relevant information which can be obtained within the limits of the law. However, information regarding a determination or finding made in error which was subsequently corrected or overturned, and/or was withdrawn by the issuing government entity, is not required. Individuals and Sole Proprietors may use a Social Security Number but are encouraged to obtain and use a federal Employer Identification Number (EIN).

NYS VENDOR ID: _____

NEW YORK STATE VENDOR RESPONSIBILITY QUESTIONNAIRE
FOR-PROFIT CONSTRUCTION (CCA-2)

BUSINESS ENTITY INFORMATION		
Legal Business Name	EIN _____	
Address of the Principal Place of Business (street, city, state, zip code)	New York State Vendor Identification Number	
	Telephone ext.	Fax
	Website	
Authorized Contact for this Questionnaire		
Name	Telephone ext.	Fax
Title	Email	

Additional Business Entity Identities: If applicable, list any other DBA, Trade Name, Former Name, Other Identity, or EIN used in the last five (5) years, the state or county where filed and the status (active or inactive).

Type	Name	EIN	State or County where filed	Status

I. BUSINESS CHARACTERISTICS		
1.0 Business Entity Type – Check appropriate box and provide additional information:		
a) ☐ Corporation (including PC)	Date of Incorporation	
b) ☐ Limited Liability Company (LLC or PLLC)	Date Organized	
c) ☐ Limited Liability Partnership	Date of Registration	
d) ☐ Limited Partnership	Date Established	
e) ☐ General Partnership	Date Established	County (if formed in NYS)
f) ☐ Sole Proprietor	How many years in business?	
g) ☐ Other	Date Established	
If Other, explain:		
1.1 Was the Business Entity formed in New York State?		☐ Yes ☐ No
If "No," indicate jurisdiction where the Business Entity was formed:		
☐ United States	State	
☐ Other	Country	

NYS VENDOR ID: _____

NEW YORK STATE VENDOR RESPONSIBILITY QUESTIONNAIRE
FOR-PROFIT CONSTRUCTION (CCA-2)

I. BUSINESS CHARACTERISTICS	
1.2 Is the Legal Business Entity publicly traded?	☐ Yes ☐ No
If "Yes," provide the CIK code or Ticker Symbol:	
1.3 Is the Business Entity currently registered to do business in New York State? *Note: Select "Not Required" if the Business Entity is a Sole Proprietor or General Partnership*	☐ Yes ☐ No ☐ Not Required
If "No," explain why the Business Entity is not required to be registered to do business in New York State:	
1.4 Is the responding Business Entity a Joint Venture? Note: If the submitting Business Entity is a Joint Venture, also submit a separate questionnaire for each Business Entity comprising the Joint Venture.	☐ Yes ☐ No
1.5 If the Business Entity's Principal Place of Business is not in New York State, does the Business Entity maintain an office in New York State? *(Select "N/A" if Principal Place of Business is in New York State.)*	☐ Yes ☐ No ☐ N/A
If "Yes," provide the address and telephone number for one office located in New York State.	
1.6 Is the Business Entity a New York State certified Minority-Owned Business Enterprise, or Women-Owned Business Enterprise, or New York State Small Business, or federally certified Disadvantaged Business Enterprise?	☐ Yes ☐ No
If "Yes," check all that apply: ☐ New York State certified Minority-Owned Business Enterprise (MBE) ☐ New York State certified Women-Owned Business Enterprise (WBE) ☐ New York State Small Business ☐ Federally certified Disadvantaged Business Enterprise (DBE)	
1.7 Identify each person or business entity that is, or has been within the past five (5) years, Principal Owner of 5.0% or more of the firm's shares; a Business Entity Official; or one of the five largest shareholders, if applicable. *(Attach additional pages if necessary.)* Joint Ventures: Provide information for all firms involved.	

Name *(For each person, include middle initial)*	Title	Percentage of ownership (Enter 0%, if not applicable)	Employment status with the firm
			☐ Current ☐ Former
			☐ Current ☐ Former
			☐ Current ☐ Former
			☐ Current ☐ Former

NYS VENDOR ID: _____

NEW YORK STATE VENDOR RESPONSIBILITY QUESTIONNAIRE
FOR-PROFIT CONSTRUCTION (CCA-2)

II. AFFILIATE and JOINT VENTURE RELATIONSHIPS

2.0 Are there any other construction-related firms in which, now or in the past five years, the submitting Business Entity or any of the individuals or business entities listed in question 1.7 either owned or owns 5.0% or more of the shares of, or was or is one of the five largest shareholders or a director, officer, partner or proprietor of said other firm? *(Attach additional pages if necessary.)*			☐ Yes ☐ No
Firm/Company Name	Firm/Company EIN (If available)	Firm/Company's Primary Business Activity	
Firm/Company Address			
Explain relationship with the firm and indicate percent of ownership, if applicable (enter N/A, if not applicable):			
Are there any shareholders, directors, officers, owners, partners or proprietors that the submitting Business Entity has in common with this firm?			☐ Yes ☐ No
Individual's Name *(Include middle initial)*	Position/Title with Firm/Company		
2.1 Does the Business Entity have any construction-related affiliates not identified in the response to question 2.0 above? *(Attach additional pages if necessary.)*			☐ Yes ☐ No
Affiliate Name	Affiliate EIN (If available)	Affiliate's Primary Business Activity	
Affiliate Address			
Explain relationship with the affiliate and indicate percent of ownership, if applicable *(enter N/A, if not applicable)*:			
Are there any shareholders, directors, officers, owners, partners or proprietors that the submitting Business Entity has in common with this affiliate?			☐ Yes ☐ No
Individual's Name *(Include middle initial)*	Position/Title with Firm/Company		
2.2 Has the Business Entity participated in any construction-related Joint Ventures within the past three (3) years? *(Attach additional pages if necessary.)*			☐ Yes ☐ No
Joint Venture Name	Joint Venture EIN (If available)	Identify parties to the Joint Venture	

NYS VENDOR ID: _____

NEW YORK STATE VENDOR RESPONSIBILITY QUESTIONNAIRE
FOR-PROFIT CONSTRUCTION (CCA-2)

III. CONTRACT HISTORY	
3.0 Has the Business Entity completed any construction contracts?	☐ Yes ☐ No
If "Yes," list the ten most recent construction contracts the Business Entity has completed using Attachment A – Completed Construction Contracts, found at www.osc.state.ny.us/vendrep/documents/questionnaire/ac3294s.doc. *If less than ten, include most recent subcontracts on projects up to that number.*	
3.1 Does the Business Entity currently have uncompleted construction contracts?	☐ Yes ☐ No
If "Yes," list all current uncompleted construction contracts by using Attachment B – Uncompleted Construction Contracts, found at www.osc.state.ny.us/vendrep/documents/questionnaire/ac3295s.doc. *Note: Ongoing projects must be included.*	

IV. INTEGRITY – CONTRACT BIDDING ***Within the past five (5) years, has the Business Entity, an affiliate, or any predecessor company or entity:***	
4.0 Been suspended or debarred from any government contracting process or been disqualified on any government procurement?	☐ Yes ☐ No
4.1 Been subject to a denial or revocation of a government prequalification?	☐ Yes ☐ No
4.2 Had any bid rejected by a government entity for lack of qualifications, responsibility or because of the submission of an informal, non-responsive or incomplete bid?	☐ Yes ☐ No
4.3 Had a proposed subcontract rejected by a government entity for lack of qualifications, responsibility or because of the submission of an informal, non-responsive or incomplete bid?	☐ Yes ☐ No
4.4 Had a low bid rejected on a government contract for failure to make good faith efforts on any Minority-Owned Business Enterprise, Women-Owned Business Enterprise or Disadvantaged Business Enterprise goal or statutory affirmative action requirements on a previously held contract?	☐ Yes ☐ No
4.5 Agreed to a voluntary exclusion from bidding/contracting with a government entity?	☐ Yes ☐ No
4.6 Initiated a request to withdraw a bid submitted to a government entity or made any claim of an error on a bid submitted to a government entity?	☐ Yes ☐ No
For each "Yes," provide an explanation of the issue(s), the Business Entity involved, the relationship to the submitting Business Entity, the government entity involved, project(s), relevant dates, any remedial or corrective action(s) taken and the current status of the issue(s). Provide answer(s) below or attach additional sheets with numbered responses.	

V. INTEGRITY – CONTRACT AWARD ***Within the past five (5) years, has the Business Entity, an affiliate, or any predecessor company or entity:***	
5.0 Defaulted on or been suspended, cancelled or terminated for cause on any contract?	☐ Yes ☐ No
5.1 Been subject to an administrative proceeding or civil action seeking specific performance or restitution (except any disputed work proceeding) in connection with any government contract?	☐ Yes ☐ No
5.2 Entered into a formal monitoring agreement, consent decree or stipulation settlement as specified by, or agreed to with, any government entity?	☐ Yes ☐ No
5.3 Had its surety called upon to complete any contract whether government or private sector?	☐ Yes ☐ No
5.4 Forfeited all or part of a standby letter of credit in connection with any government contract?	☐ Yes ☐ No

NYS VENDOR ID: _____

NEW YORK STATE VENDOR RESPONSIBILITY QUESTIONNAIRE
FOR-PROFIT CONSTRUCTION (CCA-2)

V. INTEGRITY – CONTRACT AWARD

Within the past five (5) years, has the Business Entity, an affiliate, or any predecessor company or entity:

For each "Yes," provide an explanation of the issue(s), the Business Entity involved, the relationship to the submitting Business Entity, the government entity/owners involved, project(s), contract number(s), relevant dates, any remedial or corrective action(s) taken and the current status of the issue(s). Provide answer(s) below or attach additional sheets with numbered responses.

VI. CERTIFICATIONS/LICENSES

Within the past five (5) years, has the Business Entity, an affiliate, or any predecessor company or entity:

6.0	Had a revocation or suspension of any business or professional permit and/or license?	☐ Yes ☐ No
6.1	Had a denial, decertification, revocation or forfeiture of New York State certification of Minority-Owned Business Enterprise, Women-Owned Business Enterprise or a federal certification of Disadvantaged Business Enterprise status, for other than a change of ownership?	☐ Yes ☐ No

For each "Yes," provide an explanation of the issue(s), the Business Entity involved, the relationship to the submitting Business Entity, the government entity involved, relevant dates, any remedial or corrective action(s) taken and the current status of the issue(s). Provide answer(s) below or attach additional sheets with numbered responses.

VII. LEGAL PROCEEDINGS/GOVERNMENT INVESTIGATIONS

Within the past five (5) years, has the Business Entity, an affiliate, or any predecessor company or entity:

7.0	Been the subject of a criminal investigation, whether open or closed, or an indictment for any business-related conduct constituting a crime under local, state or federal law?	☐ Yes ☐ No
7.1	Been the subject of:	
	(i.) An indictment, grant of immunity, judgment or conviction (including entering into a plea bargain) for conduct constituting a crime; or	☐ Yes ☐ No
	(ii.) Any criminal investigation, felony indictment or conviction concerning the formation of, or any business association with, an allegedly false or fraudulent Minority-Owned Business Enterprise, Women-Owned Business Enterprise, or a Disadvantaged Business Enterprise?	☐ Yes ☐ No
7.2	Received any OSHA citation, which resulted in a final determination classified as serious or willful?	☐ Yes ☐ No
7.3	Had a government entity find a willful prevailing wage or supplemental payment violation?	☐ Yes ☐ No
7.4	Had a New York State Labor Law violation deemed willful?	☐ Yes ☐ No
7.5	Entered into a consent order with the New York State Department of Environmental Conservation, or a federal, state or local government enforcement determination involving a violation of federal, state or local environmental laws?	☐ Yes ☐ No

NYS VENDOR ID: _____

NEW YORK STATE VENDOR RESPONSIBILITY QUESTIONNAIRE
FOR-PROFIT CONSTRUCTION (CCA-2)

VII. LEGAL PROCEEDINGS/GOVERNMENT INVESTIGATIONS

Within the past five (5) years, has the Business Entity, an affiliate, or any predecessor company or entity:

7.6 Other than previously disclosed, been the subject of any citations, notices or violation orders; a pending administrative hearing, proceeding or determination of a violation of: • Federal, state or local health laws, rules or regulations; • Federal, state or local environmental laws, rules or regulations; • Unemployment insurance or workers compensation coverage or claim requirements; • Any labor law or regulation, which was deemed willful; • Employee Retirement Income Security Act (ERISA); • Federal, state or local human rights laws; • Federal, state or local security laws?	☐ Yes ☐ No

For each "Yes," provide an explanation of the issue(s), the Business Entity involved, the relationship to the submitting Business Entity, the government entity involved, relevant dates, any remedial or corrective action(s) taken and the current status of the issue(s). Provide answer(s) below or attach additional sheets with numbered responses.

Note: Information regarding a determination or finding made in error, which was subsequently corrected or overturned, and/or was withdrawn by the issuing government entity, is not required.

VIII. LEADERSHIP INTEGRITY

If the Business Entity is a Joint Venture Entity, answer "N/A - Not Applicable" to questions in this section.

Within the past five (5) years has any individual previously identified or any individual currently or formerly having the authority to sign, execute or approve bids, proposals, contracts or supporting documentation on behalf of the Business Entity with any government entity been:

8.0 Sanctioned relative to any business or professional permit and/or license?	☐ Yes ☐ No ☐ N/A
8.1 Suspended, debarred or disqualified from any government contracting process?	☐ Yes ☐ No ☐ N/A
8.2 The subject of a criminal investigation, whether open or closed, or an indictment for any business-related conduct constituting a crime under local, state or federal law?	☐ Yes ☐ No ☐ N/A
8.3 Charged with a misdemeanor or felony, indicted, granted immunity, convicted of a crime or subject to a judgment for: (i.) Any business-related activity, including but not limited to fraud, coercion, extortion, bribe or bribe-receiving, giving or accepting unlawful gratuities, immigration or tax fraud, racketeering, mail fraud, wire fraud, price-fixing or collusive bidding; or (ii.) Any crime, whether or not business-related, the underlying conduct of which related to truthfulness, including but not limited to the filing of false documents or false sworn statements, perjury or larceny	☐ Yes ☐ No ☐ N/A

For each "Yes," provide an explanation of the issue(s), the individual involved, the relationship to the submitting Business Entity, the government entity involved, relevant dates, any remedial or corrective action(s) taken and the current status of the issue(s). Provide answer(s) below or attach additional sheets with numbered responses.

NYS VENDOR ID: _____

NEW YORK STATE VENDOR RESPONSIBILITY QUESTIONNAIRE
FOR-PROFIT CONSTRUCTION (CCA-2)

IX. FINANCIAL AND ORGANIZATIONAL CAPACITY	
9.0 Within the past five (5) years, has the Business Entity or any affiliate received any formal unsatisfactory performance assessment(s) from any government entity on any contract?	☐ Yes ☐ No
If "Yes," provide an explanation of the issue(s), the Business Entity involved, the relationship to the submitting Business Entity, the government entity involved, relevant dates, any remedial or corrective action(s) taken and the current status of the issue(s). Provide answer below or attach additional sheets with numbered responses.	
9.1 Within the past five (5) years, has the Business Entity or any affiliate had any liquidated damages assessed over $25,000?	☐ Yes ☐ No
If "Yes," provide an explanation of the issue(s), the Business Entity involved, the relationship to the submitting Business Entity, relevant dates, the contracting party involved, the amount assessed and the current status of the issue(s). Provide answer below or attach additional sheets with numbered responses.	
9.2 Within the past five (5) years, has the Business Entity or any affiliate had any liens, claims or judgments over $25,000 filed against the Business Entity which remain undischarged or were unsatisfied for more than 90 days? (*Note: Including but not limed to tax warrants or liens. Do not include UCC filings.)*	☐ Yes ☐ No
If "Yes," provide an explanation of the issue(s), the Business Entity involved, the relationship to the submitting Business Entity, relevant dates, the Lien holder or Claimants' name(s), the amount of the lien(s) and the current status of the issue(s). Provide answer below or attach additional sheets with numbered responses.	
9.3 In the last seven (7) years, has the Business Entity or any affiliate initiated or been the subject of any bankruptcy proceedings, whether or not closed, or is any bankruptcy proceeding pending?	☐ Yes ☐ No
If "Yes," provide the Business Entity involved, the relationship to the submitting Business Entity, the bankruptcy chapter number, the court name and the docket number. Indicate the current status of the proceedings as "Initiated," "Pending" or "Closed." Provide answer below or attach additional sheets with numbered responses.	

9.4 What is the Business Entity's Bonding Capacity?	
a. Single Project	b. Aggregate (All Projects)
9.5 List Business Entity's Gross Sales for the previous three (3) Fiscal Years:	

1st Year (Indicate year) Gross Sales	2nd Year (Indicate year) Gross Sales	3rd Year (Indicate year) Gross Sales
9.6 List Business Entity's Average Backlog for the previous three (3) fiscal years: (Estimated total value of uncompleted work on outstanding contracts)		
1st Year (Indicate year) Amount	2nd Year (Indicate year) Amount	3rd Year (Indicate year) Amount
9.7 Attach Business Entity's most recent annual financial statement and accompanying notes or complete Attachment C – Financial Information, found at www.osc.state.ny.us/vendrep/documents/questionnaire/ac3296s.xls. *(This information must be attached.)*		

NYS VENDOR ID: _____

NEW YORK STATE VENDOR RESPONSIBILITY QUESTIONNAIRE
FOR-PROFIT CONSTRUCTION (CCA-2)

X. FREEDOM OF INFORMATION LAW (FOIL)	
10.0 Indicate whether any information provided herein is believed to be exempt from disclosure under the Freedom of Information Law (FOIL). *Note: A determination of whether such information is exempt from FOIL will be made at the time of any request for disclosure under FOIL. Attach additional pages if necessary.*	☐ Yes ☐ No
If "Yes," indicate the question number(s) and explain the basis for the claim.	

NYS VENDOR ID: _____

NEW YORK STATE VENDOR RESPONSIBILITY QUESTIONNAIRE FOR-PROFIT CONSTRUCTION (CCA-2)

Certification

The undersigned: (1) recognizes that this questionnaire is submitted for the express purpose of assisting New York State government entities (including the Office of the State Comptroller (OSC)) in making responsibility determinations regarding award or approval of a contract or subcontract and that such government entities will rely on information disclosed in the questionnaire in making responsibility determinations; (2) acknowledges that the New York State government entities and OSC may, in their discretion, by means which they may choose, verify the truth and accuracy of all statements made herein; and (3) acknowledges that intentional submission of false or misleading information may result in criminal penalties under State and/or Federal Law, as well as a finding of non-responsibility, contract suspension or contract termination.

The undersigned certifies that he/she:

- is knowledgeable about the submitting Business Entity's business and operations;
- has read and understands all of the questions contained in the questionnaire;
- has not altered the content of the questionnaire in any manner;
- has reviewed and/or supplied full and complete responses to each question;
- to the best of his/her knowledge, information and belief, confirms that the Business Entity's responses are true, accurate and complete, including all attachments, if applicable;
- understands that New York State government entities will rely on the information disclosed in the questionnaire when entering into a contract with the Business Entity; and
- is under an obligation to update the information provided herein to include any material changes to the Business Entity's responses at the time of bid/proposal submission through the contract award notification, and may be required to update the information at the request of the New York State government entities or OSC prior to the award and/or approval of a contract, or during the term of the contract.

Signature of Owner/Official _____

Printed Name of Signatory _____

Title _____

Name of Business _____

Address _____

City, State, Zip _____

Sworn to before me this _____ day of _____, 20___;

_____ Notary Public

NEW YORK STATE

VENDOR RESPONSIBILITY QUESTIONNAIRE

ATTACHMENT A – COMPLETED CONSTRUCTION CONTRACTS

Vendor Name: **NYS Vendor ID:**

Question 3.0: List the ten most recent construction contracts the Business Entity has completed. If less than ten, include most recent subcontracts on projects up to that number:

1.	Agency/Owner			Award Date	Amount	Date Completed
	Contact Person		Telephone No.	Designer Architect and /or Design Engineer		
	Contract No.	Prime or Sub	Joint Venture (JV) Name, if applicable			EIN of JV, if applicable
2.	Agency/Owner			Award Date	Amount	Date Completed
	Contact Person		Telephone No.	Designer Architect and /or Design Engineer		
	Contract No.	Prime or Sub	Joint Venture (JV) Name, if applicable			EIN of JV, if applicable
3.	Agency/Owner			Award Date	Amount	Date Completed
	Contact Person		Telephone No.	Designer Architect and /or Design Engineer		
	Contract No.	Prime or Sub	Joint Venture (JV) Name, if applicable			EIN of JV, if applicable
4.	Agency/Owner			Award Date	Amount	Date Completed
	Contact Person		Telephone No.	Designer Architect and /or Design Engineer		
	Contract No.	Prime or Sub	Joint Venture (JV) Name, if applicable			EIN of JV, if applicable
5.	Agency/Owner			Award Date	Amount	Date Completed
	Contact Person		Telephone No.	Designer Architect and /or Design Engineer		
	Contract No.	Prime or Sub	Joint Venture (JV) Name, if applicable			EIN of JV, if applicable

NEW YORK STATE

VENDOR RESPONSIBILITY QUESTIONNAIRE

ATTACHMENT A – COMPLETED CONSTRUCTION CONTRACTS

Vendor Name: **NYS Vendor ID:**

Question 3.0: List the ten most recent construction contracts the Business Entity has completed. If less than ten, include most recent subcontracts on projects up to that number:

6.	Agency/Owner			Award Date	Amount	Date Completed
	Contact Person		Telephone No.	Designer Architect and /or Design Engineer		
	Contract No.	Prime or Sub	Joint Venture (JV) Name, if applicable			EIN of JV, if applicable
7.	Agency/Owner			Award Date	Amount	Date Completed
	Contact Person		Telephone No.	Designer Architect and /or Design Engineer		
	Contract No.	Prime or Sub	Joint Venture (JV) Name, if applicable			EIN of JV, if applicable
8.	Agency/Owner			Award Date	Amount	Date Completed
	Contact Person		Telephone No.	Designer Architect and /or Design Engineer		
	Contract No.	Prime or Sub	Joint Venture (JV) Name, if applicable			EIN of JV, if applicable
9.	Agency/Owner			Award Date	Amount	Date Completed
	Contact Person		Telephone No.	Designer Architect and /or Design Engineer		
	Contract No.	Prime or Sub	Joint Venture (JV) Name, if applicable			EIN of JV, if applicable
10.	Agency/Owner			Award Date	Amount	Date Completed
	Contact Person		Telephone No.	Designer Architect and /or Design Engineer		
	Contract No.	Prime or Sub	Joint Venture (JV) Name, if applicable			EIN of JV, if applicable

NEW YORK STATE

VENDOR RESPONSIBILITY QUESTIONNAIRE

ATTACHMENT B – UNCOMPLETED CONSTRUCTION CONTRACTS

Vendor Name: **NYS Vendor ID:**

Question 3.1: List all current uncompleted construction contracts:

1.	Agency/Owner			Award Date	Completion Date
	Contact Person	Telephone No.	Designer Architect and /or Design Engineer		
	Contract No.	Prime or Sub	Joint Venture (JV) Name, if applicable		EIN of JV, if applicable
		Total Contract Amount	Amount Sublet to others	Uncompleted Amount	
2.	Agency/Owner			Award Date	Completion Date
	Contact Person	Telephone No.	Designer Architect and /or Design Engineer		
	Contract No.	Prime or Sub	Joint Venture (JV) Name, if applicable		EIN of JV, if applicable
		Total Contract Amount	Amount Sublet to others	Uncompleted Amount	
3.	Agency/Owner			Award Date	Completion Date
	Contact Person	Telephone No.	Designer Architect and /or Design Engineer		
	Contract No.	Prime or Sub	Joint Venture (JV) Name, if applicable		EIN of JV, if applicable
		Total Contract Amount	Amount Sublet to others	Uncompleted Amount	
4.	Agency/Owner			Award Date	Completion Date
	Contact Person	Telephone No.	Designer Architect and /or Design Engineer		
	Contract No.	Prime or Sub	Joint Venture (JV) Name, if applicable		EIN of JV, if applicable
		Total Contract Amount	Amount Sublet to others	Uncompleted Amount	

NEW YORK STATE

VENDOR RESPONSIBILITY QUESTIONNAIRE

ATTACHMENT B – UNCOMPLETED CONSTRUCTION CONTRACTS

Vendor Name: **NYS Vendor ID:**

Question 3.1: List all current uncompleted construction contracts:

5.	Agency/Owner			Award Date	Completion Date
	Contact Person		Telephone No.	Designer Architect and /or Design Engineer	
	Contract No.	Prime or Sub	Joint Venture (JV) Name, if applicable		EIN of JV, if applicable
			Total Contract Amount	Amount Sublet to others	Uncompleted Amount
6.	Agency/Owner			Award Date	Completion Date
	Contact Person		Telephone No.	Designer Architect and /or Design Engineer	
	Contract No.	Prime or Sub	Joint Venture (JV) Name, if applicable		EIN of JV, if applicable
			Total Contract Amount	Amount Sublet to others	Uncompleted Amount
7.	Agency/Owner			Award Date	Completion Date
	Contact Person		Telephone No.	Designer Architect and /or Design Engineer	
	Contract No.	Prime or Sub	Joint Venture (JV) Name, if applicable		EIN of JV, if applicable
			Total Contract Amount	Amount Sublet to others	Uncompleted Amount
8.	Agency/Owner			Award Date	Completion Date
	Contact Person		Telephone No.	Designer Architect and /or Design Engineer	
	Contract No.	Prime or Sub	Joint Venture (JV) Name, if applicable		EIN of JV, if applicable
			Total Contract Amount	Amount Sublet to others	Uncompleted Amount

NEW YORK STATE

VENDOR RESPONSIBILITY QUESTIONNAIRE

ATTACHMENT B – UNCOMPLETED CONSTRUCTION CONTRACTS

Vendor Name: **NYS Vendor ID:**

Question 3.1: List all current uncompleted construction contracts:

9.	Agency/Owner				Award Date	Completion Date
	Contact Person		Telephone No.	Designer Architect and /or Design Engineer		
	Contract No.	Prime or Sub	Joint Venture (JV) Name, if applicable			EIN of JV, if applicable
			Total Contract Amount	Amount Sublet to others	Uncompleted Amount	
10.	Agency/Owner				Award Date	Completion Date
	Contact Person		Telephone No.	Designer Architect and /or Design Engineer		
	Contract No.	Prime or Sub	Joint Venture (JV) Name, if applicable			EIN of JV, if applicable
			Total Contract Amount	Amount Sublet to others	Uncompleted Amount	

Grand Total All Uncompleted Contracts	**$0.00**

NEW YORK STATE VENDOR RESPONSIBILITY QUESTIONNAIRE
ATTACHMENT C - FINANCIAL INFORMATION

NYS Vendor ID: _____

As of Date: _____

ASSETS

Current Assets

1. Cash		$ -
2. Accounts receivable - less allowance for doubtful accounts	$ -	
Retainers included in accounts receivable	$ -	
Claims included in accounts receivable not yet approved or in litigation	$ -	
Total Accounts Receivable		$ -
3. Notes receivable - due within one year		$ -
4. Inventory - materials		$ -
5. Contract costs in excess of billings on uncompleted contracts		$ -
6. Accrued income receivable		
Interest	$ -	
Other (list) _____	$ -	
_____	$ -	
Total Accrued Income Receivable		$ -
7. Deposits		
Bid and Plan _____	$ -	
Other (list) _____	$ -	
_____	$ -	
Total Deposits		$ -
8. Prepaid Expenses		
Income Taxes	$ -	
Insurance	$ -	
Other (list) _____	$ -	
_____	$ -	
Total Prepaid Expenses		$ -
9. Other Current Assets		
Other (list) _____	$ -	
_____	$ -	
Total Other Current Assets		$ -
10. Total Current Assets		$ -
11. Investments		
Listed securities-present market value	$ -	
Unlisted securities-present value	$ -	
Total Investments		$ -

NEW YORK STATE VENDOR RESPONSIBILITY QUESTIONNAIRE
ATTACHMENT C - FINANCIAL INFORMATION

NYS Vendor ID: _____

12. Fixed Assets			
Land	$ -		
Building and improvements	$ -		
Leasehold improvements	$ -		
Machinery and equipment	$ -		
Automotive equipment	$ -		
Office furniture and fixtures	$ -		
Other (list) _____	$ -		
_____	$ -		
Total		$ -	
Less: Accumulated depreciation		$ -	
Total Fixed Assets - Net			$ -
13. Other Assets			
Loans receivable			
Officers	$ -		
Employees	$ -		
Shareholders	$ -		
Cash surrender value of officers' life insurance	$ -		
Organization expense – net of amortization	$ -		
Notes receivable - due after one year	$ -		
Other (list) _____	$ -		
_____	$ -		
Total Other Assets			$ -
14. TOTAL ASSETS			$ -

NEW YORK STATE VENDOR RESPONSIBILITY QUESTIONNAIRE
ATTACHMENT C - FINANCIAL INFORMATION

NYS Vendor ID: _____

LIABILITIES

Current Liabilities

15. Accounts payable		$ -
16 a. Loans from shareholders - due within one year		$ -
16 b. Other Loans - due within one year		$ -
17. Notes payable - due within one year		$ -
18. Mortgage payable - due within one year		$ -
19. Other payables - due within one year		
Other (list) _____	$ -	
_____	$ -	
Total Other Payables - due within one year		$ -
20. Billings in excess of costs and estimated earnings		$ -
21. Accrued expenses payable		
Salaries and wages	$ -	
Payroll taxes	$ -	
Employees' benefits	$ -	
Insurance	$ -	
Other	$ -	
Total Accrued Expenses Payable		$ -
22. Dividends payable		$ -
23. Income taxes payable		
State	$ -	
Federal	$ -	
Other	$ -	
Total Income Taxes Payable		$ -
24. Total current liabilities		$ -
25. Deferred income taxes payable		
State	$ -	
Federal	$ -	
Other	$ -	
Total Deferred Income Taxes		$ -
26. Long Term Liabilities		
Loans from shareholders - due after one year	$ -	
Other Loans - due within one year		
Principle	$ -	
Interest	$ -	
Notes payable - due after one year	$ -	
Mortgage - due after one year	$ -	
Other payables - due after one year	$ -	
Other (list) _____	$ -	
_____	$ -	
Total Long Term Liabilities		$ -

NEW YORK STATE VENDOR RESPONSIBILITY QUESTIONNAIRE
ATTACHMENT C - FINANCIAL INFORMATION

NYS Vendor ID: _____

27. Other Liabilities			
Other (list) _____	$ -		
_____	$ -		
Total Other Liabilities		$ -	
28. TOTAL LIABILITIES			$ -

NET WORTH

29. Net Worth (if proprietorship or partnership)			$ -
30. Stockholders' Equity			
Common stock issued and outstanding	$ -		
Preferred stock issued and outstanding	$ -		
Retained earnings	$ -		
Total	$ -		
Less: Treasury stock	$ -		
31. TOTAL STOCKHOLDERS' EQUITY			$ -
32. TOTAL LIABILITIES AND STOCKHOLDERS' EQUITY			$ -

SECTION 004550 - QUALIFICATION OF BIDDERS

TOWN OF RIVERHEAD / RIVERHEAD WATER DISTRICT

SUFFOLK COUNTY NEW YORK

The District may make such investigation as the District deems necessary to determine the responsibility of any Bidder or to determine the ability of any Bidder to perform the Work. Bidders shall furnish to the District all information and data required by the District, including complete financial data, within the time and in the form and manner required by the District. The District reserves the right to reject any bid if the evidence required by the District is not submitted as required or if the evidence submitted by or the investigation of any Bidder fails to satisfy the District that the Bidder is responsible, or is able or qualified to carry out the obligations of the Contract or to complete the Work as contemplated. At the discretion of the District, any bidder may be required to complete and submit the enclosed New York State Uniform Contracting Questionnaire to assist in determining the bidder's qualifications.

The following is a list showing the name of the Owner, Location, Date of Construction, General Description of Work, Amount of the Contract and Contract Period for projects of similar nature in size, construction method and construction procedure, which have been completed by the undersigned as the prime contractor, and which have been in operation for a period of not less than one year (minimum of five such projects).

Project No.1

Owner: _____

Contact Name and Phone Number: _____

Location: _____

General Description: _____

Contract Amount: _____

Contract Period: _____

Project No.2

Owner: _____

Contact Name and Phone Number: _____

Location: _____

General Description: _____

Contract Amount: _____

Contract Period: _____

Project No.3

Owner: _____

Contact Name and Phone Number: _____

Location: _____

General Description: _____

Contract Amount: _____

Contract Period: _____

Project No.4

Owner: _____

Contact Name and Phone Number: _____

Location: _____

General Description: _____

Contract Amount: _____

Contract Period: _____

Project No.5

Owner: _____

Contact Name and Phone Number: _____

Location: _____

General Description: _____

Contract Amount: _____

Contract Period: _____

The following is a list of the major areas of construction work under this contract to be performed by subcontractors to the bidder, showing the Type of Work and the name of the Owner, Location and Date of Construction for work of similar nature in size, construction method and construction procedure, which have been completed by the undersigned, and which have been in operation for a period of not less than one year (minimum of five such projects).

Subcontractor Name: _____

Type of Work: _____

Owner	Contact Name	Phone Number	Location	Contract Amount

Subcontractor Name: _____

Type of Work: _____

Owner	Contact Name	Phone Number	Location	Contract Amount

Subcontractor Name: _____

Type of Work: _____

Owner	Contact Name	Phone Number	Location	Contract Amount

Subcontractor Name: _____

Type of Work: _____

Owner	Contact Name	Phone Number	Location	Contract Amount

The Riverhead Water District reserves the right to reject any and all bids which do not include a completed qualifications section and/or do not meet the necessary qualifications criteria, for both prime contractor and subcontractors, as described within this qualifications section, for construction work to be performed and completed as required by the contract documents.

BIDDER

FIRM NAME: _____

ADDRESS: _____

PREPARED BY: _____

SIGNED BY: _____

TITLE: _____

END OF SECTION 004550

SECTION 004555 - CONTRACTOR'S RESPONSIBILITY

It is the Contractor's responsibility to inform the Engineer in advance when a situation arises that forces the Contractor to cancel work for a given day. For example, if the Contractor informs the Engineer that he will be on the job on a certain day and then has to cancel the appointment because he cannot obtain certain materials or equipment, it is the Contractor's responsibility to inform the Engineer of these latest developments and to let him know that construction observation services will not be needed for that day.

In the event that the Engineer is not given ample warning of such a cancellation and, as a result, unnecessary time is spent sending field personnel out to the project site to observe the previously scheduled construction, sufficient funds will be deducted from monies due the Contractor to reimburse the Engineer for his wasted time.

By the same token, sufficient funds will be deducted from monies due the Contractor to reimburse the Engineer for any services rendered in the field or in the office regarding work that had to be performed a second time due to substandard work on the part of the Contractor on the original work.

END OF SECTION 004555

SECTION 005209 - CONTRACT

CONTRACT IN QUADRUPLICATE FOR _____ AT TOWN OF RIVERHEAD, SUFFOLK COUNTY, NEW YORK, dated _____, 20__, BY AND BETWEEN THE TOWN BOARD OF THE TOWN OF RIVERHEAD, SUFFOLK COUNTY, NEW YORK, acting for and in behalf of the RIVERHEAD WATER DISTRICT (herein called the TOWN DISTRICT), and _____ (herein called the CONTRACTOR).

WITNESSETH, that the TOWN DISTRICT and the CONTRACTOR, in consideration of the premises and of the mutual covenants, considerations and agreements herein contained, agree as follows:

This Contract is hereby awarded to the CONTRACTOR for the work and material called for under his bid in the Proposal section of the Contract and designated as Items: _____

_____

_____

and if required by the District Engineers, Items: _____

_____

for the sum of: _____

_____($)

for the unit and/or lump sum price(s) as listed in the Proposal herein.

1. CONTRACT DOCUMENTS AND DEFINITIONS

The Notice to Bidders, Information for Bidders, Proposal, General Conditions, Contract, Specifications and Plans, together with any Addenda, shall form part of this Contract, and the provisions thereof shall be as binding upon the parties hereto as if they were herein fully set forth. The titles, headings, headlines and marginal notes contained herein are solely to facilitate reference to the various provisions of the contract documents and in no way affect, limit or cast light upon the interpretation of the provisions to which they refer. Whenever the term "contract documents" is used, it shall mean and include this Contract, the Plans, Specifications, any Addenda, and the Notice to Bidders, Information for Bidders, General Conditions and Proposal. In case of any conflict or inconsistency between the provisions of the Contract and those of the Specifications, the provisions of the Contract shall govern.

WORK: The term WORK, as used herein, refers to all of the work proposed to be accomplished at the site of the project and all such other work as is in any manner required to accomplish the completed project, and includes all plant, labor, materials, supplies, equipment and other facilities and acts necessary or proper for or incidental to the carrying out and completion of the terms of this Contract. The term WORK PERFORMED shall be construed to include material delivered to and suitably stored at the site of the project.

EXTRA WORK: The term EXTRA WORK, as used herein, refers to and includes all work required by the TOWN DISTRICT which, in the judgment of the Engineer, with the Town's approval, involves changes in or additions to work required by the Plans, Specifications and any Addenda in their present form.

SUBCONTRACTOR: The term SUBCONTRACTOR, as used herein, shall mean any person, firm or corporation applying labor and material for work at the site of the project, but not including the parties to this Contract.

ENGINEER: In the performance of the work, the TOWN DISTRICT shall be represented by its Consulting Engineer H2M architects + engineers (herein called the ENGINEER).

NOTICE: The term NOTICE, as used herein, shall mean and include written notice. Written notice shall be deemed to have been duly served when delivered to, or at the last known business address of, the person, firm or corporation for whom intended or to his, their, or its duly authorized agents, representatives or officers, or when enclosed in a postage prepaid wrapper or envelope addressed to such person, firm, or corporation at his, their, or its last known business address and deposited in a United States Mail Box.

DIRECTED, REQUIRED, APPROVED, ACCEPTABLE: Whenever they refer to the work, or its performance, "directed", "required", "permitted", "ordered", "designated", "prescribed", and words of like import shall imply the direction, requirement, permission, order, designation or prescription of the Engineer, and "approved", "satisfied", or "satisfactory", "in the judgment of", and words of like import, shall mean approved or acceptable to, or satisfactory to, in the judgment of the Engineer.

2. SCOPE OF THE WORK

The Contractor will furnish all plant, labor, material, supplies, equipment and other facilities and things necessary or proper for or incidental to, the work contemplated by this Contract as required by, and in strict accordance with, the applicable Plans, Specifications and Addenda prepared by the Engineer and/or required by and in strict accordance with, such changes as are ordered and approved pursuant to this Contract, and will perform all other obligations imposed on him by the Contract.

3. COMPENSATION TO BE PAID TO THE CONTRACTOR

A. Agreed Prices: It is understood and agreed that the Contractor will accept as payment in full the summation of products, of the actual quantities in place upon the completion of the work, as determined by the Engineer's measurements by the unit prices bid, no allowance being made for anticipated profit or for reason of variations from the estimated quantities set forth in the Proposal.

B. Extra Work and/or Changes: The TOWN DISTRICT may, at any time, by a written order, and without notice to the sureties, require the performance of such extra work or changes in the work as it may find necessary or desirable. The amount of compensation to be paid to the Contractor for any extra work, as so ordered, shall be determined as follows:

(1) By such applicable unit prices, if any, as set forth in the contract; or

(2) If no such unit prices are set forth, then by unit prices or by a lump sum mutually agreed upon by the TOWN DISTRICT and the Contractor; or

(3) If no such unit prices are set forth, and if the parties cannot agree upon unit prices or a lump sum, then by actual net cost in money to the Contractor of the materials, permits, wages, or applied labor, premium for Workers' Compensation Insurance, payroll taxes required by law, rental for plant and equipment used (excluding small tools) to which total cost will be added 20 percent as full compensation for all other items of profit, costs and expenses, including administration, overhead, superintendence, insurance, insurance other than Workers' Compensation Insurance, material used in temporary structures, allowances made by the Contractor to subcontractors, additional premiums upon the Performance Bond of the Contractor and the use of small tools.

4. TIME OF ESSENCE

Inasmuch as the provisions of this Contract relating to the time for performance and completion of the work are for the purpose of enabling the TOWN DISTRICT to proceed with the construction of a public improvement, in accordance with a predetermined program, such provisions are of the essence of this Contract.

5. COMMENCEMENT OF WORK

The Contractor agrees that he will commence work within ten (10) consecutive calendar days after signing this Contract, and that the day he commences work shall constitute the first of the consecutive calendar days allowed for completion of the work.

6. TIME FOR COMPLETION

The time for completion of this Contract shall be within the number of calendar days stated in the Bid Proposal and the date of such completion shall be the date of the certificate of completion hereinafter specified.

The TOWN DISTRICT reserves the right to order the Contractor to suspend operations when, in the opinion of the Engineer, improper weather conditions make such action advisable, and to order the Contractor to resume operations when weather and ground conditions permit. The days during which such suspension of work is in force are not chargeable against the specified completion time.

7. LIQUIDATED DAMAGES FOR DELAY

The time limit being essential to and of the essence of this Contract, the Contractor hereby agrees that the TOWN DISTRICT shall be, and is hereby authorized to deduct and retain out of the money which may be due or may become due to said Contractor under this agreement, the sum of FIVE HUNDRED DOLLARS ($500.00) per day, which amount is hereby agreed upon, fixed and determined by the parties hereto as the LIQUIDATED DAMAGES, including overhead charges, services, inspector's wages, and interest on the money invested, that the TOWN DISTRICT will suffer by reason of such default, for each and every day during which the aforesaid work may be incomplete over and beyond the time herein stipulated for its completion, provided, however, that the TOWN DISTRICT shall have the right to extend the time for the completion of said work.

8. EXTENSIONS OF TIME - NO WAIVER

If the Contractor shall be delayed in the completion of his work by reason of unforeseeable causes beyond his control and without his fault or negligence, including but not restricted to Acts of God or of any public enemy, acts or neglect of the TOWN DISTRICT, acts or neglect of any other Contractor, fires, floods, epidemics, quarantine restrictions, strikes, riots, civil commotion or freight embargoes, the period herein above specified for completion of his work shall be extended by such time as shall be fixed by the TOWN DISTRICT.

No such extension of time shall be considered a waiver by the TOWN DISTRICT of its right to terminate the Contract for abandonment or delay by the Contractor as hereinafter provided or relieve the Contractor from full responsibility for performance of his obligations hereunder.

9. CONTRACT SECURITY

A. The Contractor shall furnish a Performance Bond in an amount equal to one hundred percent (100%) of the total contract price as security for the faithful performance of this Contract, and for the payment of all persons performing labor or furnishing materials in connection with this Contract.

B. Additional or Substitute Bond - If, at any time, the TOWN DISTRICT shall be or become dissatisfied with any surety or sureties, then upon the Performance Bond, or if, for any other reason, such bond shall cease to be adequate security to the TOWN DISTRICT, the Contractor shall, within five (5) days after notice from the TOWN DISTRICT, substitute an acceptable bond in such form and sum, and signed by such other surety as may be satisfactory to the TOWN DISTRICT. The premiums on such bonds shall be paid by the Contractor. No further payments shall be deemed due, nor shall be made until the new surety shall have been qualified.

C. Prior to release of the Performance Bond, the Contractor shall deliver to the TOWN DISTRICT a Maintenance Bond equal to one hundred percent (100%) of the total Contract price, including all extras. This Maintenance Bond shall remain in full force and effect for a period of one (1) year after the date of the Engineer's approval of the final payment request and such bond, which shall be executed by the Contractor and issued by a reliable, solvent surety company authorized to do business in the State of New York shall guarantee to the TOWN DISTRICT that the Contractor shall promptly remedy any defects or faults that may occur within twelve (12) months after completion and acceptance of the work performed by the Contractor pursuant to this Contract.

10. CONTRACTOR'S INSURANCE

The Contractor shall not commence any work until he has obtained and had approved by the TOWN DISTRICT all of the insurance required under this Contract, as enumerated herein:

Compensation Insurance

Public Liability and Property Damage Insurance

Contractor's Protective Liability and Property Damage Insurance

Owner's (TOWN DISTRICT) and Engineer's Protective Public Liability and Property Damage Insurance

Automobile Public Liability and Property Damage Insurance

The Contractor shall not permit any subcontractor to commence any operation on the site until satisfactory proof of carriage of the above required insurance has been posted with, and approved by, the TOWN DISTRICT.

A. Compensation Insurance - The Contractor shall take out and maintain, during the life of this Contract, Workers' Compensation Insurance for all of his employees employed at the site of the project, and in any case of any of the work being sublet, the Contractor shall require the subcontractor similarly to provide Workers' Compensation Insurance for all of the latter's employees, unless such employees are covered by the protection afforded by the Contractor.

B. Public Liability and Property Damage Insurance - The Contractor shall take out and maintain during the life of this Contract such Public Liability and Property Damage Insurance as shall protect him and any subcontractor performing work covered by this Contract for claims for damages for personal injury, including accidental death, as well as from claims for property damage which may arise from operations under this Contract, whether such operations be by himself or by any subcontractor, or by any one directly or indirectly employed by either of them, and the amounts of such insurance shall be as follows:

(1) Public Liability Insurance in the amount not less than FIVE HUNDRED THOUSAND DOLLARS ($500,000.) for bodily injuries, including wrongful death to any one person, and subject to the same limit for each person in an amount not less than ONE MILLION DOLLARS ($1,000,000.) on account of one accident.

(2) Property Damage Insurance in an amount not less than ONE HUNDRED THOUSAND DOLLARS ($100,000.) for damages on account of any one accident and in an amount of not less than TWO HUNDRED THOUSAND DOLLARS ($200,000.) for damages on account of all accidents.

C. Liability and Property Damage Insurance - The above policies for public liability and property damage insurance must be so written as to include Contractor's Protective Liability and Property Damage Insurance to protect the Contractor against claims arising from the operations of any subcontractor.

D. Owner's Protective Public Liability and Property Damage Insurance - (TOWN DISTRICT, and/or TOWN BOARD, TOWN OF RIVERHEAD as OWNER and/or H2M architects + engineers as ENGINEERS) - The Contractor shall furnish to the TOWN DISTRICT with respect to the operations he or any of his subcontractors perform, a regular Protective Public Liability Insurance Policy for and in behalf of the TOWN DISTRICT and/or TOWN BOARD, TOWN OF RIVERHEAD as OWNER and/or H2M architects + engineers, as ENGINEERS, providing for a limit of not less than FIVE HUNDRED THOUSAND DOLLARS ($500,000.) for all damages arising out of bodily injuries to, or death of, one

person and subject to that limit for each person, a total limit of ONE MILLION DOLLARS ($1,000,000.) for all damages arising out of bodily injuries to, or death of, two or more persons in any one accident; and regular Protective Property Damage Insurance providing for a limit of not less than ONE HUNDRED THOUSAND DOLLARS ($100,000.) for all damages arising out of injury to, or destruction of, property in any one accident and subject to that limit per accident a total (or aggregate) limit of TWO HUNDRED THOUSAND DOLLARS ($200,000.) for all damages arising out of injury to, or destruction of property during the policy period. The insurance must fully cover the legal liability of the TOWN DISTRICT and/or TOWN BOARD, TOWN OF RIVERHEAD as OWNER and/or H2M architects + engineers, as ENGINEERS. The coverage provided under this policy must not be affected if the TOWN DISTRICT performs work in connection with the project either for, or in cooperation with, the Contractor or as an aid thereto, whether the same be a part of the Contract or separate therefrom, by means of its own employees or agents, or if the TOWN DISTRICT directs or supervises the work to be performed by the Contractor.

E. Automobile Public Liability and Property Damage Insurance - The Contractor shall take out and maintain during the life of the Contract such automobile public liability and property damage insurance as shall protect him and any subcontractor performing work covered by this Contract from claims for damages for personal injury, including accidental death as well as from claims for property damage which may arise from operations under this Contract, whether such operations be by himself or by any subcontractor, or by any one directly or indirectly employed by either of them and the amounts of such insurance shall be as follows:

(1) Automobile Public Liability Insurance in an amount not less than FIVE HUNDRED THOUSAND DOLLARS ($500,000.) for bodily injuries, including wrong-ful death by any one person, and subject to the same limit for each person in an amount not less than ONE MILLION DOLLARS ($1,000,000.) on account of one accident.

(2) Automobile Property Damage Insurance in an amount of not less than ONE HUNDRED THOUSAND DOLLARS ($100,000.) for damages on account of any one accident and in an amount of not less than TWO HUNDRED THOUSAND DOLLARS ($200,000.) for damages on account of all accidents.

11. PROOF OF CARRIAGE OF INSURANCE

The Contractor shall furnish the TOWN DISTRICT with certificates of each insurer insuring the Contractor or any subcontractor under this Contract, except with respect to subdivision D. of paragraph 10. In respect to this paragraph, the Contractor shall furnish the TOWN DISTRICT with the original insurance policy and a copy to the Engineer.

Both certificates, as furnished, and the insurance policy, as required, shall bear the policy numbers, the expiration date of the policy and the limit or limits of liability thereunder. Both the certificates and the policy shall be further endorsed to provide the TOWN DISTRICT and Engineer with any notice of cancellation at least ten (10) days prior to the actual date of such cancellation.

12. COMPLIANCE WITH LABOR AND PENAL LAWS

The Contractor hereby expressly agrees to comply with all the provisions of the Labor Law and any and all amendments thereto, insofar as the same are applicable to this Contract. The Labor Laws, as amended, provide that no laborer, worker or mechanic in the employ of the Contractor, subcontractor or other person doing or contracting to do the whole or a part of the work contemplated by this Contract, shall be permitted or required to work more than eight (8) hours in any one calendar day, except in cases of extraordinary emergency caused by fire, flood, or danger to life or property; that no such person shall be employed more than eight (8) hours in any day or more than five (5) days in any week, except in such

emergency; that the wages to be paid for a legal day's work as hereinbefore defined, to laborers, workers, or mechanics upon the work called for under this Contract, or for any materials used upon or in connection therewith shall not be less than the prevailing rate for a day's work in the same trade or occupation in the locality within the State where such work is to be done and each laborer, worker, or mechanic employed by the Contractor, subcontractor, or other person about or upon the work shall be paid the wages herein provided; that employees engaged in the construction outside the limits of cities and villages are no longer exempt from the provisions of the Labor Laws which required the payment of the prevailing rate of wages and the eight (8) hour day.

Section 220A of the Labor Law, as amended by Chapter 472 of the Laws of 1932, provides that before payment is made by or on behalf of the State or any City, County, Town or Village or other civil division of the State, of any sums due on account of a con-tract for a public improvement, it is the duty of the Comptroller or the financial officer of the Municipal Corporation to require the Contractor and each and every subcontractor to file a certified statement in writing, in satisfactory form, certifying to the amounts then due and owing to any and all laborers for daily or weekly wages on account of labor performed upon the work of the Contract, setting forth therein the names of the persons whose wages are unpaid and the amount due each, respectively.

Section 220B of the Labor Law, as amended, provides that any interested person who shall have previously filed a protest in writing objecting to the payment to any Contractor or subcontractor to the extent of the amount or amounts due or to become due to him for daily or weekly wages for labor performed on the public improvement for which the Contract was entered into, or if, for any other reason, it may be deemed advisable, the Comptroller of the State or other financial officer of the Municipal Corporation may deduct from the whole amount of any payment on account thereof the sum or sums admitted by any Contractor or subcontractor in such statement or statements so filed to be due and owing by him on account of labor performed and may withhold the amount so deducted for the benefit of the laborers for daily or weekly wages, whose wages are unpaid as shown by the verified statements filed by any Contractor or subcontractor and may pay directly to any person the amount or amounts so shown to be due for such wages.

Section 220C of the Labor Law, as amended, provides the penalty for making of a false oath or verification.

Section 220D of the Labor Law provides that the advertised specifications for every Contract for the construction, reconstruction, maintenance and/or repair of highways to which the State, County, Town and/or Village is a party shall contain the provision stating the minimum rate of hourly wage that can be paid, as shall be designated by the Industrial Commissioner, to the laborers employed in the performance of the Contract, either by the Contractor, subcontractor or other person doing or contracting to do the whole or part of the work contemplated by the Contract, and the Contract shall contain a stipulation that such laborers shall be paid not less than such hourly minimum rate of wage. Any person or corporation that willfully pays after entering into such Contract less than such stipulated minimum hourly wage scale shall be guilty of a misdemeanor and, upon conviction, shall be punished for a first offense by a fine of Five Hundred Dollars ($500.) or by imprisonment for not more than thirty (30) days, or by both fine and imprisonment for a second offense by a fine of One Thousand Dollars ($1,000.) and, in addition thereto, the Contract on which the violation has occurred shall be forfeited; and no such person or corporation shall be entitled to receive any sum or nor shall any officer, agent or employee of the State pay the same or authorize its payment from the funds under his charge or control to any person or corporation for work done upon any contract, on which the Contractor has been convicted of second offense in violation of the provisions of this Section.

The minimum wage rates established by the Industrial Commissioner, State of New York, for this Contract, are as set forth in the INFORMATION FOR BIDDERS.

All excavation shall be done in compliance with Article 36 of the General Business Law and notices given as provided by GBL Section 761.

13. PAYMENT OF EMPLOYEES

The Contractor and each of his subcontractors shall pay each of his employees engaged in work on this project under this Contract in full (less deductions made mandatory by law) in cash and not less often than once each week.

14. ESTIMATES AND PAYMENTS

A. Monthly: At the end of each calendar month during the progress of the work, the Contractor shall submit a payment requisition to the Engineer. The Engineer will review the requisition and prepare a payment request based on the estimated amount of work performed and the quantity of materials furnished, based on the prices set forth in the Proposal. In consideration of the work done and the materials furnished, the TOWN DISTRICT will pay or cause to be paid to the Contractor the amount estimated by the Engineer as due him less a sum equal to five percent (5%) of such amount and less such additional amount as may be necessary to satisfy any claims, liens or judgments against the Contractor which have not been suitable discharged. The making of any such estimate or payment made thereon shall not be taken or construed as an acceptance by the Engineer or the TOWN DISTRICT of any work so estimated and paid for. The amount of the monthly estimate remaining unpaid will be retained by the TOWN DISTRICT as a guarantee that the Contractor will faithfully and completely fulfill all obligations imposed by the Contract and Specifications, and against any damages incurred by the TOWN DISTRICT by reason of any failure on the part of the Contractor to fulfill all conditions and obligations herein contained. All partial payments are subject to correction in any subsequent payment. The retained amounts shall be paid as set forth in the following subsection B.

B. Final: Thirty (30) days after the Contractor shall have substantially completed the work required of it under the Contract the Engineer will prepare an approval of Final Payment Request. Thereafter the TOWN DISTRICT will pay to the Contractor the remaining amount of the Contract balance less a sum equal to two (2) times the value of any remaining items to be completed and less an amount necessary to satisfy any claims, liens or judgments against the Contractor which have not been suitably discharged. As the remaining items of work are satisfactorily completed or corrected, the TOWN DISTRICT shall promptly pay, upon receipt of a requisition for these items less an amount necessary to satisfy any claims, liens or judgments against the Contractor which have not been suitably discharged. Any claims, liens and judgments referred to in this section shall pertain to the project and shall be filed in accordance with the terms of the applicable Contract and/or applicable laws.

C. In order to secure the performance of the covenant of the Contractor, prior to release of the Performance Bond, the Contractor shall deliver to the TOWN DISTRICT a Maintenance Bond equal to one hundred percent (100%) of the total Contract price, including all extras. This Maintenance Bond shall remain in full force and effect for a period of one (1) year after the date of the Engineer's approval of the Final Payment Request and such bond, which shall be executed by the Contractor and issued by a reliable, solvent surety company authorized to do business in the State of New York shall guarantee to the TOWN DISTRICT that the Contractor shall promptly remedy any defects or faults that may occur within twelve (12) months after completion and acceptance of the work performed by the Contractor pursuant to this Contract.

D. Measurements for Payment: The Engineer shall make due measurement of the work done during the progress of the work and his estimate shall be final and conclusive evidence of the amounts of work performed by the Contractor under, and by virtue of, this agreement, and shall be taken as the full measure of compensation to be received by the Contractor. When requested by the Contractor,

the Engineer shall measure, re-measure or re-estimate any portion of the work; but the expense of such re-measurement or re-estimating shall, unless material error be proved, be paid for by the Contractor.

E. Should all work not be completed and final payment request not submitted within one (1) year after the punch list has been issued, the TOWN DISTRICT will be under no obligation to make final payment.

15. ACCEPTANCE OF FINAL PAYMENT CONSTITUTES RELEASE

The acceptance by the Contractor of the final payment shall be, and shall operate as a release to the TOWN DISTRICT from all claims and all liabilities to the Contractor for all things done or furnished in connection with this work, and for every act and neglect of the TOWN DISTRICT and other relating to, or arising out of, this work, excepting the Contractor's claims for interest upon the final payment, if these payments be improperly delayed. No payment, however, final or otherwise, shall operate to release the Contractor or his sureties from any obligations under this Contract or the Performance Bond.

16. CONSTRUCTION REPORTS

The Contractor shall submit to the Engineer prior to the commencing of any work under this Contract a detailed schedule and plan of operation, indicating the manner in which the Contractor proposes to prosecute the work, and a time schedule therefore. Such schedules are not intended to bind the Contractor to a predetermined plan or procedure, but rather to enable the Engineer to coordinate the work of the Contractor with work required of and to be performed by others.

The Contractor shall furnish the Engineer with periodic estimates for partial payments as required elsewhere in the contract documents and, in addition thereto, will furnish the Engineer with a detailed estimate for final payment. Prior to being eligible to receive final payment under this Contract, the Contractor shall furnish the Engineer with substantial proof that all bills for services rendered and materials supplied have been paid. The enumeration of the above reports in no way relieves the Contractor of his responsibility under existing Federal or State laws of filing such other reports with agencies other than the TOWN DISTRICT as may be required by such existing laws or regulations.

17. INSPECTION AND TESTS

All material and workmanship shall be subject to inspection, examination and test by the Engineer and other representatives of the TOWN DISTRICT at any time during the construction and at any and all places where manufacturing of materials used and/or construction is carried on.

Without additional charge, the Contractor shall furnish promptly all reasonable facilities, labor and materials necessary to make tests so required safe and convenient.

If, at any time, before final acceptance of the entire work, the Engineer, with the TOWN DISTRICT's approval, considers necessary or advisable an examination of any portion of the work already completed, by removing or tearing out the same, the Contractor shall, upon request, furnish promptly all necessary facilities, labor and materials for such examination. If such work is found to be defective in any material respect, due to the fault of the Contractor or any subcontractor, or if any work shall be covered over without the approval or consent of the Engineer, with the TOWN DISTRICT's approval, whether or not the same shall be defective, the Contractor shall be liable for the expenses of such examination and of satisfactory reconstruction.

If, however, such approval and consent shall have been given, and such work is found to meet the requirements of this Contract, the Contractor shall be recompensed for the expense of such examination

and reconstruction in the manner herein provided for the payment of costs of extra work pursuant to a Change Order signed by the TOWN DISTRICT and the Contractor.

The selection of laboratories and/or agencies for the inspection and tests of supplies, materials or equipment shall be subject to the approval of the Engineer. Satisfactory documentary evidence that the material has passed the required inspection and test must be furnished the Engineer prior to the incorporation of the material in the work.

Any rejected work shall be removed from the site of the project completely at the expense of the Contractor.

18. PLANS AND SPECIFICATIONS - INTERPRETATIONS

The Contractor shall keep at the site of the work one (1) copy of the Plans and Specifications signed and identified by the Engineer. Anything shown on the Plans and not mentioned in the Specifications or mentioned in the Specifications and not shown on the Plans shall have the same effect as if shown or mentioned respectively in both. In case of any conflict or inconsistency between the Plans and Specifications, the Plans shall govern. Any discrepancy between the figures and drawings shall be submitted to the Engineer, whose decision therein shall be conclusive.

19. SUBSURFACE CONDITIONS FOUND DIFFERENT

Should the Contractor encounter subsurface conditions at the site materially differing from those shown on the Plans or indicated in the Specifications, he shall immediately give notice to the Engineer of such conditions before they are disturbed; the Engineer shall thereupon promptly investigate the conditions and if he finds that they materially differ from those shown on the Plans or indicated in the Specifications, he shall at once make such changes in the Plans and/or Specifications as he may find necessary.

Any increase or decrease of cost resulting from such changes will be adjusted in the manner provided herein for adjustment as to extra and/or additional work and changes shall be by Change Order executed by the TOWN DISTRICT and Contractor.

20. CONTRACTOR'S TITLE TO MATERIALS

No material or supplies for the work shall be purchased by the Contractor or by any subcontractor subject to any chattel mortgage or under a conditional sale or other agreement by which an interest is retained by the seller. The Contractor warrants that he has good title to all materials and supplies used by him in the work.

21. SUPERINTENDENCE BY CONTRACTOR

At the site of the work the Contractor shall employ a Construction Superintendent or Foreman who shall have full authority to act for the Contractor. It is understood that such repre-sentative shall be acceptable to the Engineer and shall be one who can be continued in that capacity for the particular job involved unless he ceases to be on the Contractor's payroll.

22. PROTECTION OF WORK, PERSONS AND PROPERTY

Precaution shall be exercised at all times for the proper protection of all persons, property and work. The safety provisions of applicable laws, building and construction codes shall be observed. Machinery equipment and all hazards shall be guarded or eliminated in accordance with the safety provisions of the Manual of Accident Prevention in Construction, published by the Associated General Contractors of America, to the extent that such provisions are not in contravention of applicable law. The Contractor shall furnish entirely at his own expense any and all additional safety measures deemed necessary by the TOWN DISTRICT or its Engineer to adequately safeguard the traveling public. The Contractor shall give notice to the owners of all utilities which may serve the area and request their assistance in predetermining the location and depth of the various pipes, conduits, manholes and other underground facilities.

The Contractor shall, at all hours of the day, safely guard and protect his own work and adjacent property from any damage and shall replace or make good any such damage, loss or injury unless such be caused directly by errors contained in the contract documents, or by the TOWN DISTRICT or its duly authorized representatives.

The Contractor shall provide and maintain such watchers, barriers, lights, flares and other signals, at his own expense, as will effectively prevent any accident in consequence of his work for which the TOWN DISTRICT might be liable. The Contractor shall be liable for all injury or damage caused by his act or neglect, or that of his employees.

23. PATENT RIGHTS

As part of his obligation hereunder and without any additional compensation, the Contractor will pay for any patent fees or royalties required in respect to the work or any part thereof and will fully indemnify the TOWN DISTRICT for any loss on account of any infringement of any patent rights, unless prior to his use in the work of a particular process or a product of a particular manufacturer, he notifies the TOWN DISTRICT in writing that such process or product is an infringement of a patent.

24. REPRESENTATIONS OF CONTRACTOR

The Contractor represents and warrants:

A. That he is financially solvent and that he is experienced in and competent to perform the type of work involved under this Contract and able to furnish the plan, materials, supplies and/or equipment to be furnished for the work; and

B. That he is familiar with all Federal, State and Municipal Laws, ordinances and regulations which may in any way affect the work of those employed hereunder, including but not limited to any special acts relating to the work; and

C. That such work required by these contract documents as is to be done by him can be satisfactorily constructed and used for the purpose for which it is intended and that such construction will not injure any person or damage any property; and

D. That he has carefully examined the Plans, Specifications, and the site of the work, and that from his own investigation he has satisfied himself as to the nature and location of the work, the character, location, quality and quantity of surface and subsurface materials, structures and utilities likely to be encountered, the character of equipment, and other facilities needed for the performance of the work, the general local conditions which may in any way affect the work or its performance.

25. AUTHORITY OF THE ENGINEER

In the performance of the work, the Contractor shall abide by all orders and directions and requirements of the Engineer and shall perform all work to the satisfaction of the Engineer, at such time and places, by such methods, and in such manner and sequence as he may require. The Engineer shall determine the amount, quality, acceptability and fitness of all parts of the work, shall interpret the plans, specifications, contract documents and any extra work orders and shall decide all other questions in connection with the work. Upon request, the Engineer shall confirm in writing any oral orders, directions, requirements or determinations. The enumeration herein or else-where in the contract documents of particular instances in which the opinion, judgment, discretion or determination of the Engineer shall control, or in which work shall be performed to his satisfaction or subject to his approval, or inspection, shall not imply that only matters similar to those enumerated shall be so governed and so performed, but without exception all the work shall be governed and so performed. Nothing herein shall be construed to give the Contractor a claim for extra work unless prior thereto an appropriate Change Order has been executed by the TOWN DISTRICT and Contractor for such work.

26. SURVEYS

The Contractor shall provide all layouts, measurements, lines, and grades necessary for the execution of the work, and will furnish the necessary stakes and spikes for laying out such lines and grades and the unskilled labor necessary to place same and/or assist in measuring.

27. CHANGES AND ALTERATIONS

The TOWN DISTRICT reserves the right to make alterations in the location, line, grade, plans, form or dimensions of the work, or any part thereof, either before or after the commencement of the construction. If such alterations diminish the amount of work to be done, no claim for damages or anticipated profits will be warranted on the work which may be dispensed with. If such alterations increase the amount of work, such increases shall be paid for according to the quantity of work actually done and at the unit prices for such work as contained in the schedule of prices.

If such alterations decrease the amount of work, such decreases shall be a credit to the TOWN DISTRICT based on the quantity of work not performed as agreed to by the TOWN DISTRICT and the Contractor and at the unit prices for such work as contained in the Schedule of Prices.

28. CORRECTION OF WORK

All work and all materials, whether incorporated into the work or not, all processes of manufacture and all methods of construction shall be, at all times and places, subject to the inspection of the Engineer who shall be the final judge of quality, materials, processes of manufacture and methods of construction suitable for the purpose for which they are used. Should they fail to meet his approval they shall be forthwith reconstructed, made good and replaced and/or corrected as the case may be, by the Contractor at his own expense. Rejected materials shall immediately be removed from the site.

If, in the opinion of the Engineer, it is not desirable to replace any defective or damaged materials or to reconstruct or correct any portion of the work injured or not performed in accordance with the contract documents, the compensation to be paid to the Contractor hereunder shall be reduced by such amount as, in the judgment of the Engineer, shall be equitable.

The Contractor expressly warrants that his work shall be free from any defects in materials or workmanship, and agrees to correct any defects, settlements, or shrinkages which may appear within one (1) year following the date of the final payment request. Neither the acceptance of the completed work nor payment therefor shall operate to release the Contractor or his sureties from any obligations under or upon this Contract or the Performance Bond.

29. WEATHER CONDITIONS

The Contractor will and will cause his subcontractors to protect carefully his and their work and materials against damage or injury from the weather. If any work or materials shall have been damaged or injured by reason of the failure on the part of the Contractor or any of his subcontractors to protect his, or their work, such work and materials shall be removed and replaced at the expense of the Contractor.

30. THE TOWN DISTRICT'S RIGHT TO WITHHOLD PAYMENTS

The TOWN DISTRICT may withhold from the Contractor so much of any approved payments due him as may, in the judgment of the TOWN DISTRICT, be necessary:

A. To assure the payment of just claims then due and unpaid of any persons supplying labor or materials for the work;

B. To protect the TOWN DISTRICT from loss due to defective work not remedied; or

C. To protect the TOWN DISTRICT from loss due to injury to persons or damage to the work or property of other contractors or subcontractors or others, caused by the act or neglect of the Contractor or any of his subcontractors. The TOWN DISTRICT shall have the right, as agent for the Contractor, to apply any such amount so withheld in such manner as the TOWN DISTRICT may deem proper to satisfy such claims or to secure such protection. Such application of such money shall be deemed payments for the account of the Contractor.

31. THE TOWN DISTRICT'S RIGHT TO STOP WORK OR TERMINATE CONTRACT

If:

A. The Contractor shall file for any form of bankruptcy relief or make an assignment for the benefit of creditors; or

B. A receiver or liquidator shall be appointed for the Contractor for any of his property and shall not be dismissed within twenty (20) days after such appointment, or the proceedings in connection therewith shall not be stayed on appeal within the said twenty (20) days; or

C. The Contractor shall violate any provision of this Contract; or

D. The Contractor shall fail or refuse to regard laws, ordinances, regulations, or the instructions of the Engineer and/or the TOWN DISTRICT;

then, and in any such event, the TOWN DISTRICT without prejudice to any other rights or remedy it may have, and after seven (7) days written notice to the Contractor and Contractor's Surety may terminate the employment of the Contractor and take possession of the premises and all material, tools and appliances therein, and complete the work by contract or otherwise, as the TOWN DISTRICT solely may deem

expedient. In such case, the Contractor shall not be entitled to receive any further payment until the work is finished.

If the unpaid balance of the compensation to be paid the Contractor hereunder shall exceed the expense of so completing the work (including compensation for additional managerial, engineering, administration, legal, testing and observation services and any damages for delay), such excess shall be paid to Contractor.

If the expense shall exceed the unpaid balance, the Contractor and his sureties shall be liable to the TOWN DISTRICT for such excess.

32. CONTRACTOR'S RIGHT TO STOP WORK OR TERMINATE CONTRACT

If the work shall be stopped by order of the Court or any public authority, Federal or State agency, for a period of three (3) months through no act or fault of the Contractor or any of his agents, servants, employees, materialmen, or subcontractors, the Contractor may, upon ten (10) days notice to the TOWN DISTRICT, discontinue his performance of the work and/or terminate the Contract.

Upon termination by the Contractor the TOWN DISTRICT may take possession of the work and complete the work by Contract or otherwise, as the TOWN DISTRICT solely may deem expedient.

If the Contract is terminated by the Contractor, the liability of the TOWN DISTRICT to the Contractor shall be for all work executed and for any proven loss sustained upon any materials, equipment, tools, construction equipment, including reasonable profit and damages.

33. RESPONSIBILITY OF WORK

The Contractor agrees to be responsible for the entire work embraced in this Contract until its completion and final acceptance, and that any unfaithful or imperfect work that may become damaged from any cause, either by act or commission or omission to properly guard and protect the work that may be discovered at any time before the completion and acceptance shall be removed and replaced by good and satisfactory work without any charge to the TOWN DISTRICT and that such removal and replacement will be performed immediately on the requirement of the Engineer, notwithstanding the fact that it may have been overlooked by the proper inspector, and partial payment made thereon. It is fully understood by the Contractor that the inspection of the work shall not relieve him of any obligation to do sound and reliable work as herein prescribed, and that any omission to disapprove of any work by the Engineer at or before the time of a partial payment or other estimate shall not be construed to be an acceptance of any defective work.

34. USES OF PREMISES AND REMOVAL OF DEBRIS

The Contractor expressly undertakes at his own expense:

A. To take every precaution against injury to persons or damages to property;

B. To store his apparatus, materials, supplies and equipment in such orderly fashion at the site of the work as will not unduly interfere with the progress of his work or the work of any of his subcontractors, or other contractors;

C. To place upon any of the completed work only such superimposed loads as are consistent with the safety of that portion of the work;

D. To frequently clean up all refuse, rubbish, scrap materials and debris caused by the operations to the end that at all times the site of the work shall present a neat and orderly and workmanlike appearance;

E. Before the Engineer's approval of the Final Payment Request, to remove all surplus material, temporary structures, plants of any description and debris of any and every nature resulting from his operations and to put the site in a neat and orderly condition.

35. POWER OF THE CONTRACTOR TO ACT IN AN EMERGENCY

In case of an emergency which threatens loss or injury to property and/or safety to life, the Contractor will be permitted to act as he sees fit without previous instructions from the TOWN DISTRICT. He shall notify the TOWN DISTRICT thereof immediately thereafter and any compensation claimed by the Contractor due to extra work made necessary because of his acts in such emergency shall be submitted to the TOWN DISTRICT for approval and Change Order executed by the TOWN DISTRICT and the Contractor.

Where the Contractor has not taken action but has notified the Engineer of an emergency indicating injury to persons or damage to adjoining property or to the work being accomplished under this Contract, then upon authorization from the Engineer to prevent such threatened injury or damage, he shall act as instructed by the Engineer. The amount of reimbursement claimed by the Contractor on account of any such action shall be deter-mined in the manner provided herein for the payment of extra work and shall be incorporated into a Change Order executed by the TOWN DISTRICT and Contractor.

36. SUITS AT LAW

The Contractor shall indemnify and save harmless the TOWN DISTRICT from and against all suits, claims, demands or actions for any injury sustained or alleged to be sustained by any party or parties in connection with the construction of the work or any part thereof, or any commission or omission of the Contractor, his employees or agents or any subcontractors and in case any such action shall be brought against the TOWN DISTRICT, the Contractor shall immediately take care of and defend the same at his own cost and expense.

37. PROVISIONS REQUIRED BY LAW DEEMED INSERTED

Each and every provision of law and clause required by law to be inserted in this Contract shall be deemed to be inserted herein and the Contract shall be read and enforced as though it were included herein, and, if through mistake or otherwise, any such provision is not inserted or is not correctly inserted, then upon the application of either party, the Contract shall forthwith be physically amended to make such insertion.

38. SUBLETTING, SUCCESSOR AND ASSIGNS

The Contractor shall not sublet any part of the work under this Contract, nor assign any money due him hereunder without first obtaining the written consent of the TOWN DISTRICT. This Contract shall inure to the benefit of and shall be binding upon the parties hereunder and upon their respective successors and assigns, but neither party shall assign or transfer his interest herein in whole or in part without consent of the other.

IN WITNESS WHEREOF, the parties hereto have set their hands and seals the day and year first above written.

RIVERHEAD WATER DISTRICT

BY: _____ (TOWN SEAL)
SEAN WALTER, SUPERVISOR

_____
CONTRACTOR
BY: _____

TITLE: _____ (SEAL)

STATE OF NEW YORK)
) ss:
COUNTY OF SUFFOLK)

On the ___ day of _____, 20__, before me personally came SEAN WALTER, to me known, who being by me duly sworn, did depose and say that he is the duly elected SUPERVISOR of the TOWN OF RIVERHEAD, COUNTY OF SUFFOLK, NEW YORK, and that at a meeting of the Town Board of the Town of Riverhead, duly held on the __ day of _____, 20__, the said Board, also acting in its capacity as the Governing Body of the Riverhead Water District, authorized the said SUPERVISOR to execute all and any contracts on behalf of the Board; that he knows the seal of said Town, and that the said Water District seal is also the seal of the Town of Riverhead; that the seal affixed to the foregoing instrument is its corporate seal; that it was affixed thereto by order of the said Board, and that he signed his name thereto and executed the said instrument on behalf of the said Water District by like order and authority.

_____
NOTARY PUBLIC

ACKNOWLEDGMENT OF CONTRACTOR, IF A CORPORATION

STATE OF NEW YORK)
) ss:
COUNTY OF)

On this ___ day of _____, 20__, before me personally came and appeared _____, to me known, who by me being duly sworn, did depose and say that he resides at _____ that he is the _____ of _____, the Corporation described in and which executed the foregoing instrument, that he knows the seal of said corporation, that one of the seals affixed to said instrument is such seal, that it was so affixed by order of the Directors of said Corporation, and that he signed his name thereto by like order.

_____
NOTARY PUBLIC

ACKNOWLEDGMENT OF CONTRACTOR, IF A PARTNERSHIP

STATE OF NEW YORK)
) ss:
COUNTY OF)

On this ___ day of _____, 20__, before me personally came and appeared _____, to me known, and known to me to be one of the members of the firm of _____, described in and who executed the foregoing instrument, and he acknowledged to me that he executed the same as and for the act and deed of said form.

_____
NOTARY PUBLIC

END OF SECTION 005209

SECTION 006295 – IRANIAN INVESTMENT ACTIVITIES CERTIFICATION

IRANIAN INVESTMENT ACTIVITIES CERTIFICATION

(To be completed by the Bidder and submitted with the bid)

By submission of this bid, each bidder and each person signing on behalf of any bidder certifies, and in the case of a joint bid each party thereto certifies as to its own organization, under penalty of perjury, that to the best of its knowledge and belief that each bidder is not on the list created pursuant to paragraph (b) of subdivision 3 of section 165-a of the state finance law.

Dated:_____2017

_____ _____

(Name of corporation or partnership) (Individual)

_____

(Officer stating title) (Partner)

END OF SECTION 006295

SECTION 007305 – GENERAL CONDITIONS

1. GENERAL CONDITIONS

The "General Conditions" are hereby made a part of these specifications and are attached herein.

Where any article of the General Conditions is supplemented hereby, the provisions of such article shall remain in effect. All the supplemental provisions shall be considered as added thereto. Where any such article is amended, voided or superseded thereby, the provisions of such article not so specifically amended, voided or superseded shall remain in effect.

Work, materials, plant, labor and other requirements of the General Conditions shall be furnished by the contractor. No direct payment shall be made for these General Conditions, and payment shall be deemed to be included in the Contract price or various items of the entire Contract.

2. CONTRACT DOCUMENTS

The Contract Documents include, but are not limited to, the General Conditions, General Specifications, Detailed Specifications, Plans, Proposal Form, Contract and other sections as either cited on the Index page(s) or actually included in the bound documents.

Each section of the Contract Documents is intended to be complementary to the other sections. It is intended that they include all items of labor and materials and everything required and necessary to complete the work, even though some items of work or materials may not be particularly mentioned in every section or may have been inadvertently omitted from the Drawings or Specifications or both.

3. APPROVAL OF SUBCONTRACTORS AND MATERIALS

Prior to commencing any work under this Contract, the contractor shall submit to the Engineer for approval a list of all the subcontractors and material suppliers it proposes to use for this Contract. No subcontractor or material supplier will be permitted to deliver materials or perform any work on this Contract until it has been approved by the Engineer.

4. INTERPRETATION OF DRAWINGS, ETC.

In the event of discrepancies between the Drawings and the Specifications, the following order shall be given preference when making interpretations:

a. Addenda (later dates to take precedence over earlier dates).

b. Drawings (schedules or notes to take precedence over other data shown on Drawings).

c. Technical Specifications

d. General Specifications

e. General Conditions

On all Plans, Drawings, etc., the figure dimensions shall govern in the case of discrepancy between the scales and figures.

The contractor shall take no advantage of any error or omission in the Plans, or of any discrepancy between the Plans and Specifications, and the Engineer shall make such corrections and interpretations as may be deemed necessary for the fulfillment of the intent of the Specifications and of the Plans as construed by him, and his decision shall be final.

All work that may be called for in the Specifications and not shown on the Plans, or shown on the Plans and not called for in the Specifications, shall be furnished and executed by the contractor as if designated in both. Should any work or material be required which is not denoted in the Plans and Specifications, either directly or indirectly, but which is, nevertheless, necessary for the proper carrying out of the intent thereof, it is understood and agreed that the same is implied and required, and that the contractor shall perform such work and furnish such materials as if they were completely delineated and described.

5. ADDITIONAL WORK

Additional work, if required to be performed under this Contract, will be in accordance with the applicable paragraphs of the Contract. The Engineer shall be the sole judge as to whether such work was intended as part of the Contract or is in addition thereto.

6. SAFETY PROVISIONS

The contractor shall take every precaution and shall provide such equipment and facilities as are necessary or required for the safety of its employees. In case of an accident, first aid shall be administered to any who may be injured in the progress of the work. In addition, the contractor shall also be prepared for the removal to the hospital for treatment of any employee either seriously injured or ill.

7. SANITARY REGULATIONS

In addition to compliance with the Occupational Safety and Health Act, the contractor shall erect and maintain necessary sanitary conveniences for the use of employees on the work. Such conveniences shall be properly secluded from observation, and their use shall be strictly enforced. Such sanitary conveniences shall be constructed in compliance with all laws, ordinances or regulations governing these facilities. The contents of same shall be removed with sufficient frequency to prevent nuisance, and disposed of to the satisfaction of the Engineer.

The contractor shall obey and enforce such other sanitary regulations and orders and shall take such precautions against infectious diseases as may be deemed necessary. In case any infectious diseases occur among its employees, it shall arrange for the immediate removal of the patient from the work and his isolation from all persons connected with the work.

8. RESPONSIBILITY OF ENGINEER AND CONTRACTOR DURING CONSTRUCTION

By means of the on-site observations of the work in progress, the Engineer will endeavor to provide protection for the Owner against defects and deficiencies in the contractor's work, but the furnishing of such services shall not include construction review of the contractor's construction means, methods, techniques, sequences or procedures, or of any safety precautions and programs in connection with the work.

The contractor is responsible for complete conformance to the Plans and Specifications, proper construction procedures, coordination with subcontractors, other contractors and utilities, and safe working conditions for its employees.

9. LABOR

All contractors and subcontractors employed upon the work shall and will be required to conform to the Labor Laws of the State of New York and the various acts amendatory and supplementary thereto; and to all other laws, ordinances and legal requirements applicable thereto. All contractors and subcontractors shall submit original copies of certified payroll records for each period worked at the site. In addition all contractors and subcontractors shall provide a completed Affidavit of Labor Form 220 and Riverhead Town Wage Disclaimer Form for each payroll week prior to issuance of any partial or final payment.

All labor shall be performed in the best and most workmanlike manner by mechanics skilled in their respective trades. The standards of the work required throughout shall be of such grade as will bring results of the first class only.

10. CLAIMS OR PROTESTS

If the contractor considers any work required of him to be outside the requirements of the Contract, or considers any record or ruling of the Engineers or Inspectors as unfair, he shall ask for written instructions or decisions immediately, and then file a written protest with the Owner against the same within five days thereafter, or be considered as having accepted the record or ruling.

11. NOTIFICATION, INTERFERENCE AND INJURY TO UTILITIES

The contractor shall cooperate in every way with the utility companies. All excavation shall be done in compliance with Article 36 of the General Business Law and notices given as provided by GBL, Section 761.

All conduits, water mains and gas mains encountered in the construction shall be properly and safely taken care of by the contractor, who shall, upon encountering same, notify the public corporation to whom they belong, in order that they may be changed in such a manner as not to interfere with the final construction.

In case any damage shall result to any service pipe for water or gas, or any private or public sewer or conduit by reason of negligence on the part of the contractor, he shall, without delay and at his own expense, repair same to the satisfaction of the Engineer, and in case such repairs are not made promptly or satisfactorily, the Owner may have the repairs made by another contractor or otherwise, and deduct the cost of same from any monies due or to become due the contractor.

12. INFRINGEMENT OF PATENTS

The contractor further agrees to hold himself responsible for any claims made against the Owner for any infringement of patents by the use of patented articles in any one phase of construction of the work and the completion of same, or any process connected with the work agreed to be performed under this Contract, or of any materials used upon said work and to save harmless and indemnify the Owner from all costs, expenses and damages which the Owner shall be obliged to pay by reason of any infringement or patents used in the construction and completion of the work.

13. DAMAGES

All damage, direct or indirect, of whatever nature resulting from either the performance of, or resulting to the work under, this Contract during its progress from whatever cause, shall be borne and sustained by the contractor, and all work shall be solely at his risk until the date of the final payment request.

14. GUARANTEE/WARRANTY

This contractor shall guarantee and warrant his work and that of his subcontractors against defects in workmanship and/or materials for a period of one (1) year from the date of final payment request by the Engineer, except as otherwise specified. Upon written notification from the Engineer, the contractor shall repair, replace or reconstruct such defects to the satisfaction of the Engineer at no cost to the Owner.

15. STANDARDIZATION

The general items specified with the Technical Specifications indicate specific manufacturers and/or catalog numbers etc., for the purpose of standardization within the District in order to minimize the stockpiling of replacement parts.

END OF SECTION 007305

SECTION 007306 – WATER MAIN & APPURTENANCES GENERAL SPECIFICATIONS

SCOPE

The work under this Contract includes furnishing all materials, equipment, labor, etc., for the installation of cement-lined ductile iron water mains and appurtenances, as shown on the Plans and Specifications and as directed by, and to the approval of, the Engineer.

GENERAL SPECIFICATIONS

The General Specifications are hereby made a part of the contract.

Where any article of the General Specifications is supplemented hereby, the provision of such article shall remain in effect. The supplemental provisions shall be considered as added thereto. Where any such article is amended, voided or superseded thereby, the provisions of such article not so specifically amended, voided or superseded shall remain in effect.

NO DIRECT PAYMENT

No direct payment will be made for work done or for materials furnished under these General Specifications. Compensation shall be deemed to have been included in the contract price of the entire work.

WORKMANSHIP

It is the intent of these specifications to describe definitely and fully the character of materials and workmanship required with regard to ordinary features and to require first-class work and materials.

For any unexpected features arising during the progress of the work and not fully covered herein, the specifications shall be interpreted by the Engineer to require first-class work and materials, and such interpretation shall be accepted by the Contractor.

PROPER METHOD OF WORK AND PROPER MATERIALS

The Engineer shall have the authority to direct the order and sequence of the work, which shall be such as to permit the entire work under this contract to be begun and to proceed as rapidly as possible, and such as to bring the several parts of the work to a successful completion at about the same time.

If at any time before the commencement or during the progress of the work, the materials and appliances used or to be used appear to the Engineer as insufficient or improper for assuring the quality of work required or the required rate of progress, he may order the Contractor to increase its efficiency or to improve the character of the materials and appliances. The failure of the Engineer to demand any increase of such efficiency or improvement shall not release the Contractor from its obligation to secure the quality of work or the rate of progress specified.

During freezing or inclement weather, no work shall be done except such as can be done satisfactorily and in a manner to secure first-class construction throughout. Work shall be done in such a manner as will properly protect and support existing permanent structures, pipe lines, etc.

CONSTRUCTION MONITORING

The Contractor shall, at all times, provide convenience of access and safe and proper facilities for the observation of all parts of the work. No work, except such shop work as may be so permitted, shall be done except in the presence of the Engineer or his assistants.

The Contractor shall notify the Engineer 24 hours in advance as to when he intends to start or resume the work.

No material of any kind shall be used upon the work until it has been monitored and accepted by the Engineer. Rejected materials shall be immediately removed from the work and not again offered for use.

Any materials or workmanship found at any time to be defective shall be remedied at once, regardless of previous monitoring. The observation of the work by the Engineer is intended to aid the Contractor in applying labor and materials in accordance with the contract, but such observation shall not operate to release the Contractor from any of its contract obligations.

COOPERATION

All contractors and subcontractors shall coordinate their work with adjacent work and with other trades so as to facilitate the general progress of the work. Each trade shall afford other trades every reasonable opportunity for the installation of their work and for the storage of their material.

PROTECTION OF WORK

The Contractor shall place a sufficiency of yellow, Type C steady burn lights on or near any work accessible to the public, and keep them burning sunset to sunrise. It shall erect suitable railings or barriers, and shall provide watchmen on the work by day or night, as required and deemed necessary for the safety of the work on public or adjoining property.

The District reserves the right to remedy any neglect on the part of the Contractor regarding the protection of the work which may come to its attention, after 24 hours notice in writing; except that in cases of emergency, it shall have the right to remedy any neglect without notice; and, in either case, to deduct the cost of such remedy from any money due the Contractor.

REPRESENTATIVE ALWAYS PRESENT

The Contractor, in case of its absence from the work, shall have a competent representative or foreman present, who shall follow, without delay, all instructions of the Engineer or his assistants in the prosecution and completion of the work in conformity with this Contract, and shall have full authority to supply labor and materials immediately. The Contractor shall also have a competent representative available to receive telephone messages and provide a reasonable reply as soon as possible, but not later than 24 hours.

SIGNS

No signs or advertisements will be allowed to be displayed unless a permit is obtained from the Town Building Department and the sign is approved by the Engineer.

PERMITS AND REGULATIONS

The Water Main Contractor shall obtain and pay for all permits necessary to conduct the work and complete this contract. Work shall be performed in strict accordance with the regulations and requirements of the various civil agencies having jurisdiction. Upon completion of the work provided for in

this Contract, and before final payment shall be made, the Contractor shall furnish the Engineer with any necessary certificates of approval issued by these various agencies.

LABOR

All contractors and subcontractors employed upon the work shall and will be required to conform to the Labor Laws of the State of New York and the various acts amendatory and supplementary thereto, and to all other laws, ordinances and legal requirements applicable thereto.

All labor shall be performed in the best and most workmanlike manner by mechanics skilled in their respective trades. The standards of the work required throughout shall be of such grade as will bring results of the first class only.

TEMPORARY LIGHTS, WATER, ETC.

The Water Main Contractor shall provide its own temporary light, power and water supply. The Contractor shall pay for all current for temporary power and lighting. The District will not charge for water used.

GRADES, LINES, LEVELS AND SURVEYS

The Developer will establish the lines and grades for the water mains and appurtenances. All grades, lines, levels and bench marks shall be maintained by this Contractor, who shall be responsible for same.

The Contractor shall verify grades, lines, levels and dimensions shown on the plans, and he shall report any errors or inconsistencies in the above to the Engineer before commencing work.

BOUNDARIES OF WORK AND CONTIGUOUS WORK

The District will obtain from the Developer rights-of-way for the work specified in this Contract, and the Contractor shall not enter or occupy with men, tools or materials any private ground outside the easements and rights-of-way without the consent of the property owner and the approval of the Engineer. Other contractors of the District may, for all purposes required by their contracts, enter upon the work and premises used by the Contractor, and the Contractor shall give to other contractors of the District all reasonable facilities and assistance for the completion of adjoining work.

Where the work called for extends upon or through private property, the Developer shall procure all necessary rights and deeds for access to the property for the District. The Contractor shall not proceed with this part of the work until the Developer has completed its negotiations with the property holders and all necessary papers are in the hands of the District.

CLEANING AND FINAL INSPECTION

All pipelines and other structures shall be kept clean during construction. As work approaches completion, the Contractor shall systematically and thoroughly clean the site and structures and make any needed repairs.

The Contractor shall furnish, at its own expense, suitable tools and labor for cleaning out all dirt, mortar and foreign substances from the structures, and the water for cleaning by flushing. Any leakage of water into any structure exceeding the limits specified, or any deviation from the proper grade for alignment to the structure, or any other defect such as to make the work, in the opinion of the Engineer, fall short of first-class work, shall be properly corrected by the Contractor at its own expense.

Cleaning and repairs shall be arranged, so far as practicable, to be completed upon finishing the construction work. Notice to begin this cleaning and repairing, if such is needed, will be given in due season by the Engineer who, at the same time, will make his final inspection of the work.

The Engineer will not prepare the Contractor's final payment request until after the final inspection is made. During this final inspection, the Contractor, at its own expense, shall furnish suitable provisions as to needed drainage, workers and appliances.

CHANGE ORDERS

During the construction period of this Contract, the Engineer may order, in writing, changes in sizes of (prior to release of water mains and appurtenances from the manufacturer) and/or changes in locations of (prior to delivery of materials) and/or additional water mains and appurtenances. The prices as bid for the respective sizes installed shall also be applicable to any such changes or additions ordered by the Engineer. The total cost of additional water mains and appurtenances shall be limited to not more than 10 percent of the total bid (including alternate bids) of all items.

END OF SECTION 007306

SECTION 007343 - WAGE RATES

Andrew M. Cuomo, Governor

Roberta Reardon, Commissioner

Riverhead Water District

Waqas Saeed, Project Engineer
538 Broadhollow Road
Melville NY 11747

Schedule Year	2016 through 2017
Date Requested	01/23/2017
PRC#	2017000727

Location	Riverhead, NY
Project ID#	RDWD 16-51
Project Type	Installation of approximately 2,900 linear feet of new 8-inch water main for the proposed Old Orchard Subdivision.

PREVAILING WAGE SCHEDULE FOR ARTICLE 8 PUBLIC WORK PROJECT

Attached is the current schedule(s) of the prevailing wage rates and prevailing hourly supplements for the project referenced above. A unique Prevailing Wage Case Number (PRC#) has been assigned to the schedule(s) for your project.

The schedule is effective from July 2016 through June 2017. All updates, corrections, posted on the 1st business day of each month, and future copies of the annual determination are available on the Department's website www.labor.state.ny.us. Updated PDF copies of your schedule can be accessed by entering your assigned PRC# at the proper location on the website.

It is the responsibility of the contracting agency or its agent to annex and make part, the attached schedule, to the specifications for this project, when it is advertised for bids and /or to forward said schedules to the successful bidder(s), immediately upon receipt, in order to insure the proper payment of wages.

Please refer to the "General Provisions of Laws Covering Workers on Public Work Contracts" provided with this schedule, for the specific details relating to other responsibilities of the Department of Jurisdiction.

Upon completion or cancellation of this project, enter the required information and mail **OR** fax this form to the office shown at the bottom of this notice, **OR** fill out the electronic version via the NYSDOL website.

NOTICE OF COMPLETION / CANCELLATION OF PROJECT

Date Completed: _____ Date Cancelled: _____

Name & Title of Representative: _____

Phone: (518) 457-5589 Fax: (518) 485-1870
W. Averell Harriman State Office Campus, Bldg. 12, Room 130, Albany, NY 12240

General Provisions of Laws Covering Workers on Article 8 Public Work Contracts

Introduction

The Labor Law requires public work contractors and subcontractors to pay laborers, workers, or mechanics employed in the performance of a public work contract not less than the prevailing rate of wage and supplements (fringe benefits) in the locality where the work is performed.

Responsibilities of the Department of Jurisdiction

A Department of Jurisdiction (Contracting Agency) includes a state department, agency, board or commission: a county, city, town or village; a school district, board of education or board of cooperative educational services; a sewer, water, fire, improvement and other district corporation; a public benefit corporation; and a public authority awarding a public work contract.

The Department of Jurisdiction (Contracting Agency) awarding a public work contract MUST obtain a Prevailing Rate Schedule listing the hourly rates of wages and supplements due the workers to be employed on a public work project. This schedule may be obtained by completing and forwarding a "Request for wage and Supplement Information" form (PW 39) to the Bureau of Public Work. The Prevailing Rate Schedule MUST be included in the specifications for the contract to be awarded and is deemed part of the public work contract.

Upon the awarding of the contract, the law requires that the Department of Jurisdiction (Contracting Agency) furnish the following information to the Bureau: the name and address of the contractor, the date the contract was let and the approximate dollar value of the contract. To facilitate compliance with this provision of the Labor Law, a copy of the Department's "Notice of Contract Award" form (PW 16) is provided with the original Prevailing Rate Schedule.

The Department of Jurisdiction (Contracting Agency) is required to notify the Bureau of the completion or cancellation of any public work project. The Department's PW 200 form is provided for that purpose.

Both the PW 16 and PW 200 forms are available for completion online.

Hours

No laborer, worker, or mechanic in the employ of a contractor or subcontractor engaged in the performance of any public work project shall be permitted to work more than eight hours in any day or more than five days in any week, except in cases of extraordinary emergency. The contractor and the Department of Jurisdiction (Contracting Agency) may apply to the Bureau of Public Work for a dispensation permitting workers to work additional hours or days per week on a particular public work project.

There are very few exceptions to this rule. Complete information regarding these exceptions is available on the "4 Day / 10 Hour Work Schedule" form (PW 30R).

Wages and Supplements

The wages and supplements to be paid and/or provided to laborers, workers, and mechanics employed on a public work project shall be not less than those listed in the current Prevailing Rate Schedule for the locality where the work is performed. If a prime contractor on a public work project has not been provided with a Prevailing Rate Schedule, the contractor must notify the Department of Jurisdiction (Contracting Agency) who in turn must request an original Prevailing Rate Schedule form the Bureau of Public Work. Requests may be submitted by: mail to NYSDOL, Bureau of Public Work, State Office Bldg. Campus, Bldg. 12, Rm. 130, Albany, NY 12240; Fax to Bureau of Public Work (518) 485-1870; or electronically at the NYSDOL website www.labor.state.ny.us.

Upon receiving the original schedule, the Department of Jurisdiction (Contracting Agency) is REQUIRED to provide complete copies to all prime contractors who in turn MUST, by law, provide copies of all applicable county schedules to each subcontractor and obtain from each subcontractor, an affidavit certifying such schedules were received. If the original schedule expired, the contractor may obtain a copy of the new annual determination from the NYSDOL website www.labor.state.ny.us.

The Commissioner of Labor makes an annual determination of the prevailing rates. This determination is in effect from July 1st through June 30th of the following year. The annual determination is available on the NYSDOL website www.labor.state.ny.us.

Payrolls and Payroll Records

Every contractor and subcontractor MUST keep original payrolls or transcripts subscribed and affirmed as true under penalty of perjury. Payrolls must be maintained for at least three (3) years from the project's date of completion. At a minimum, payrolls must show the following information for each person employed on a public work project: Name, Address, Last 4 Digits of Social Security Number, Classification(s) in which the worker was employed, Hourly wage rate(s) paid, Supplements paid or provided, and Daily and weekly number of hours worked in each classification.

Every contractor and subcontractor shall submit to the Department of Jurisdiction (Contracting Agency), within thirty (30) days after issuance of its first payroll and every thirty (30) days thereafter, a transcript of the original payrolls, subscribed and affirmed as true under penalty of perjury. The Department of Jurisdiction (Contracting Agency) shall collect, review for facial validity, and maintain such payrolls.

In addition, the Commissioner of Labor may require contractors to furnish, with ten (10) days of a request, payroll records sworn to as their validity and accuracy for public work and private work. Payroll records include, by are not limited to time cards, work description sheets, proof that supplements were provided, cancelled payroll checks and payrolls. Failure to provide the requested information within the allotted ten (10) days will result in the withholding of up to 25% of the contract, not to exceed $100,000.00. If the contractor or subcontractor does not maintain a place of business in New York State and the amount of the contract exceeds $25,000.00, payroll records and certifications must be kept on the project worksite.

The prime contractor is responsible for any underpayments of prevailing wages or supplements by any subcontractor.

All contractors or their subcontractors shall provide to their subcontractors a copy of the Prevailing Rate Schedule specified in the public work contract as well as any subsequently issued schedules. A failure to provide these schedules by a contractor or subcontractor is a violation of Article 8, Section 220-a of the Labor Law.

All subcontractors engaged by a public work project contractor or its subcontractor, upon receipt of the original schedule and any subsequently issued schedules, shall provide to such contractor a verified statement attesting that the subcontractor has received the Prevailing Rate Schedule and will pay or provide the applicable rates of wages and supplements specified therein. (See NYS Labor Laws, Article 8 . Section 220-a).

Determination of Prevailing Wage and Supplement Rate Updates Applicable to All Counties

The wages and supplements contained in the annual determination become effective July 1st whether or not the new determination has been received by a given contractor. Care should be taken to review the rates for obvious errors. Any corrections should be brought to the Department's attention immediately. It is the responsibility of the public work contractor to use the proper rates. If there is a question on the proper classification to be used, please call the district office located nearest the project. Any errors in the annual determination will be corrected and posted to the NYSDOL website on the first business day of each month. Contractors are responsible for paying these updated rates as well, retroactive to July 1st.

When you review the schedule for a particular occupation, your attention should be directed to the dates above the column of rates. These are the dates for which a given set of rates is effective. To the extent possible, the Department posts rates in its possession that cover periods of time beyond the July 1st to June 30th time frame covered by a particular annual determination. Rates that extend beyond that instant time period are informational ONLY and may be updated in future annual determinations that actually cover the then appropriate July 1st to June 30th time period.

Withholding of Payments

When a complaint is filed with the Commissioner of Labor alleging the failure of a contractor or subcontractor to pay or provide the prevailing wages or supplements, or when the Commissioner of Labor believes that unpaid wages or supplements may be due, payments on the public work contract shall be withheld from the prime contractor in a sufficient amount to satisfy the alleged unpaid wages and supplements, including interest and civil penalty, pending a final determination.

When the Bureau of Public Work finds that a contractor or subcontractor on a public work project failed to pay or provide the requisite prevailing wages or supplements, the Bureau is authorized by Sections 220-b and 235.2 of the Labor Law to so notify the financial officer of the Department of Jurisdiction (Contracting Agency) that awarded the public work contract. Such officer MUST then withhold or cause to be withheld from any payment due the prime contractor on account of such contract the amount indicated by the Bureau as sufficient to satisfy the unpaid wages and supplements, including interest and any civil penalty that may be assessed by the Commissioner of Labor. The withholding continues until there is a final determination of the underpayment by the Commissioner of Labor or by the court in the event a legal proceeding is instituted for review of the determination of the Commissioner of Labor.

The Department of Jurisdiction (Contracting Agency) shall comply with this order of the Commissioner of Labor or of the court with respect to the release of the funds so withheld.

Summary of Notice Posting Requirements

The current Prevailing Rate Schedule must be posted in a prominent and accessible place on the site of the public work project. The prevailing wage schedule must be encased in, or constructed of, materials capable of withstanding adverse weather conditions and be titled "PREVAILING RATE OF WAGES" in letters no smaller than two (2) inches by two (2) inches.

The "Public Work Project" notice must be posted at the beginning of the performance of every public work contract, on each job site.

Every employer providing workers. compensation insurance and disability benefits must post notices of such coverage in the format prescribed by the Workers. Compensation Board in a conspicuous place on the jobsite.

Every employer subject to the NYS Human Rights Law must conspicuously post at its offices, places of employment, or employment training centers, notices furnished by the State Division of Human Rights.

Employers liable for contributions under the Unemployment Insurance Law must conspicuously post on the jobsite notices furnished by the NYS Department of Labor.

Apprentices

Employees cannot be paid apprentice rates unless they are individually registered in a program registered with the NYS Commissioner of Labor. The allowable ratio of apprentices to journeyworkers in any craft classification can be no greater than the statewide building trade ratios promulgated by the Department of Labor and included with the Prevailing Rate Schedule. An employee listed on a payroll as an apprentice who is not registered as above or is performing work outside the classification of work for which the apprentice is indentured, must be paid the prevailing journeyworker's wage rate for the classification of work the employee is actually performing.

NYSDOL Labor Law, Article 8, Section 220-3, require that only apprentices individually registered with the NYS Department of Labor may be paid apprenticeship rates on a public work project. No other Federal or State Agency of office registers apprentices in New York State.

Persons wishing to verify the apprentice registration of any person must do so in writing by mail, to the NYSDOL Office of Employability Development / Apprenticeship Training, State Office Bldg. Campus, Bldg. 12, Albany, NY 12240 or by Fax to NYSDOL Apprenticeship Training (518) 457-7154. All requests for verification must include the name and social security number of the person for whom the information is requested.

The only conclusive proof of individual apprentice registration is written verification from the NYSDOL Apprenticeship Training Albany Central office. Neither Federal nor State Apprenticeship Training offices outside of Albany can provide conclusive registration information.

It should be noted that the existence of a registered apprenticeship program is not conclusive proof that any person is registered in that program. Furthermore, the existence or possession of wallet cards, identification cards, or copies of state forms is not conclusive proof of the registration of any person as an apprentice.

Interest and Penalties

In the event that an underpayment of wages and/or supplements is found:

- Interest shall be assessed at the rate then in effect as prescribed by the Superintendent of Banks pursuant to section 14-a of the Banking Law, per annum from the date of underpayment to the date restitution is made.
- A Civil Penalty may also be assessed, not to exceed 25% of the total of wages, supplements, and interest due.

Debarment

Any contractor or subcontractor and/or its successor shall be ineligible to submit a bid on or be awarded any public work contract or subcontract with any state, municipal corporation or public body for a period of five (5) years when:

- Two (2) willful determinations have been rendered against that contractor or subcontractor and/or its successor within any consecutive six (6) year period.
- There is any willful determination that involves the falsification of payroll records or the kickback of wages or supplements.

Criminal Sanctions

Willful violations of the Prevailing Wage Law (Article 8 of the Labor Law) may be a felony punishable by fine or imprisonment of up to 15 years, or both.

Discrimination

No employee or applicant for employment may be discriminated against on account of age, race, creed, color, national origin, sex, disability or marital status.

No contractor, subcontractor nor any person acting on its behalf, shall by reason of race, creed, color, disability, sex or national origin discriminate against any citizen of the State of New York who is qualified and available to perform the work to which the employment relates (NYS Labor Law, Article 8, Section 220-e(a)).

No contractor, subcontractor, nor any person acting on its behalf, shall in any manner, discriminate against or intimidate any employee on account of race, creed, color, disability, sex, or national origin (NYS Labor Law, Article 8, Section 220-e(b)).

The Human Rights Law also prohibits discrimination in employment because of age, marital status, or religion.

There may be deducted from the amount payable to the contractor under the contract a penalty of $50.00 for each calendar day during which such person was discriminated against or intimidated in violation of the provision of the contract (NYS Labor Law, Article 8, Section 220-e(c)).

The contract may be cancelled or terminated by the State or municipality. All monies due or to become due thereunder may be forfeited for a second or any subsequent violation of the terms or conditions of the anti-discrimination sections of the contract (NYS Labor Law, Article 8, Section 220-e(d)).

Every employer subject to the New York State Human Rights Law must conspicuously post at its offices, places of employment, or employment training centers notices furnished by the State Division of Human Rights.

Workers' Compensation

In accordance with Section 142 of the State Finance Law, the contractor shall maintain coverage during the life of the contract for the benefit of such employees as required by the provisions of the New York State Workers' Compensation Law.

A contractor who is awarded a public work contract must provide proof of workers' compensation coverage prior to being allowed to begin work.

The insurance policy must be issued by a company authorized to provide workers' compensation coverage in New York State. Proof of coverage must be on form C-105.2 (Certificate of Workers' Compensation Insurance) and must name this agency as a certificate holder.

If New York State coverage is added to an existing out-of-state policy, it can only be added to a policy from a company authorized to write workers' compensation coverage in this state. The coverage must be listed under item 3A of the information page.

The contractor must maintain proof that subcontractors doing work covered under this contract secured and maintained a workers' compensation policy for all employees working in New York State.

Every employer providing worker's compensation insurance and disability benefits must post notices of such coverage in the format prescribed by the Workers' Compensation Board in a conspicuous place on the jobsite.

Unemployment Insurance

Employers liable for contributions under the Unemployment Insurance Law must conspicuously post on the jobsite notices furnished by the New York State Department of Labor.

Andrew M. Cuomo, Governor

Roberta Reardon, Commissioner

Riverhead Water District

Waqas Saeed, Project Engineer
538 Broadhollow Road
Melville NY 11747

Schedule Year	2016 through 2017
Date Requested	01/23/2017
PRC#	2017000727

Location	Riverhead, NY
Project ID#	RDWD 16-51
Project Type	Installation of approximately 2,900 linear feet of new 8-inch water main for the proposed Old Orchard Subdivision.

Notice of Contract Award

New York State Labor Law, Article 8, Section 220.3a requires that certain information regarding the awarding of public work contracts, be furnished to the Commissioner of Labor. One "Notice of Contract Award" (PW 16, which may be photocopied), **MUST** be completed for **EACH** prime contractor on the above referenced project.

Upon notifying the successful bidder(s) of this contract, enter the required information and mail **OR** fax this form to the office shown at the bottom of this notice, **OR** fill out the electronic version via the NYSDOL website.

Contractor Information

All information must be supplied

Federal Employer Identification Number: _____

Name: _____

Address: _____

_____

City: _____ State: _____ Zip: _____

Amount of Contract: $_____

Approximate Starting Date: ____/____/____

Approximate Completion Date: ____/____/____

Contract Type:

[ ] (01) General Construction
[ ] (02) Heating/Ventilation
[ ] (03) Electrical
[ ] (04) Plumbing
[ ] (05) Other : _____

Phone: (518) 457-5589 Fax: (518) 485-1870
W. Averell Harriman State Office Campus, Bldg. 12, Room 130, Albany, NY 12240

IMPORTANT NOTICE

FOR

CONTRACTORS & CONTRACTING AGENCIES

Social Security Numbers on Certified Payrolls

The Department of Labor is cognizant of the concerns of the potential for misuse or inadvertent disclosure of social security numbers. Identity theft is a growing problem and we are sympathetic to contractors' concerns with regard to inclusion of this information on payrolls if another identifier will suffice.

For these reasons, ***the substitution of the use of the last four digits of the social security number on certified payrolls submitted to contracting agencies on public work projects is now acceptable to the Department of Labor.***

NOTE: This change does not affect the Department's ability to request and receive the entire social security number from employers during the course of its public work / prevailing wage investigations.

To all State Departments, Agency Heads and Public Benefit Corporations
IMPORTANT NOTICE REGARDING PUBLIC WORK ENFORCEMENT FUND

Budget Policy & Reporting Manual

B-610

Public Work Enforcement Fund

effective date December 7, 2005

---

1. Purpose and Scope:

This Item describes the Public Work Enforcement Fund (the Fund, PWEF) and its relevance to State agencies and public benefit corporations engaged in construction or reconstruction contracts, maintenance and repair, and announces the recently-enacted increase to the percentage of the dollar value of such contracts that must be deposited into the Fund. This item also describes the roles of the following entities with respect to the Fund:

- New York State Department of Labor (DOL),
- The Office of the State of Comptroller (OSC), and
- State agencies and public benefit corporations.

2. Background and Statutory References:

DOL uses the Fund to enforce the State's Labor Law as it relates to contracts for construction or reconstruction, maintenance and repair, as defined in subdivision two of Section 220 of the Labor Law. State agencies and public benefit corporations participating in such contracts are required to make payments to the Fund.

Chapter 511 of the Laws of 1995 (as amended by Chapter 513 of the Laws of 1997, Chapter 655 of the Laws of 1999, Chapter 376 of the Laws of 2003 and Chapter 407 of the Laws of 2005) established the Fund.

3. Procedures and Agency Responsibilities:

The Fund is supported by transfers and deposits based on the value of contracts for construction and reconstruction, maintenance and repair, as defined in subdivision two of Section 220 of the Labor Law, into which all State agencies and public benefit corporations enter.

Chapter 407 of the Laws of 2005 increased the amount required to be provided to this fund to .10 of one-percent of the total cost of each such contract, to be calculated at the time agencies or public benefit corporations enter into a new contract or if a contract is amended. The provisions of this bill became effective August 2, 2005.

To all State Departments, Agency Heads and Public Benefit Corporations
IMPORTANT NOTICE REGARDING PUBLIC WORK ENFORCEMENT FUND

OSC will report to DOL on all construction-related ("D") contracts approved during the month, including contract amendments, and then DOL will bill agencies the appropriate assessment monthly. An agency may then make a determination if any of the billed contracts are exempt and so note on the bill submitted back to DOL. For any instance where an agency is unsure if a contract is or is not exempt, they can call the Bureau of Public Work at the number noted below for a determination. Payment by check or journal voucher is due to DOL within thirty days from the date of the billing. DOL will verify the amounts and forward them to OSC for processing.

For those contracts which are not approved or administered by the Comptroller, monthly reports and payments for deposit into the Public Work Enforcement Fund must be provided to the Administrative Finance Bureau at the DOL within 30 days of the end of each month or on a payment schedule mutually agreed upon with DOL.

Reports should contain the following information:

- Name and billing address of State agency or public benefit corporation;
- State agency or public benefit corporation contact and phone number;
- Name and address of contractor receiving the award;
- Contract number and effective dates;
- Contract amount and PWEF assessment charge (if contract amount has been amended, reflect increase or decrease to original contract and the adjustment in the PWEF charge); and
- Brief description of the work to be performed under each contract.

Checks and Journal Vouchers, payable to the "New York State Department of Labor" should be sent to:

Department of Labor
Administrative Finance Bureau-PWEF Unit
Building 12, Room 464
State Office Campus
Albany, NY 12240

Any questions regarding billing should be directed to NYSDOL's Administrative Finance Bureau-PWEF Unit at (518) 457-3624 and any questions regarding Public Work Contracts should be directed to the Bureau of Public Work at (518) 457-5589.

Construction Industry
Fair Play Act

Required Posting For Labor Law
Article 25-B § 861-d

Construction industry employers must post the "Construction Industry Fair Play Act" notice in a prominent and accessible place on the job site.

Failure to post the notice can result in penalties of up to $1,500 for a first offense and up to $5,000 for a second offense.

The posting is included as part of this wage schedule. Additional copies may be obtained from the NYS DOL website, www.labor.ny.gov.

If you have any questions concerning the Fair Play Act, please call the State Labor Department toll-free at 1-866-435-1499 or email us at: dol.misclassified@labor.state.ny.us .

New York State Department of Labor
Required Notice under Article 25-B of the Labor Law

ATTENTION ALL EMPLOYEES, CONTRACTORS AND SUBCONTRACTORS:
YOU ARE COVERED BY THE
CONSTRUCTION INDUSTRY FAIR PLAY ACT

The law says that you are an employee unless:

- You are free from direction and control in performing your job AND
- You perform work that is not part of the usual work done by the business that hired you AND
- You have an independently established business

Your employer cannot consider you to be an independent contractor unless all three of these facts apply to your work.

IT IS AGAINST THE LAW FOR AN EMPLOYER TO MISCLASSIFY EMPLOYEES AS INDEPENDENT CONTRACTORS OR PAY EMPLOYEES OFF-THE-BOOKS.

Employee rights. If you are an employee:

- You are entitled to state and federal worker protections such as
  - unemployment benefits, if unemployed through no fault of your own, able to work, and otherwise qualified
  - workers' compensation benefits for on-the-job injuries
  - payment for wages earned, minimum wage, and overtime (under certain conditions)
  - prevailing wages on public work projects
  - the provisions of the National Labor Relations Act and
  - a safe work environment
- It is a violation of this law for employers to retaliate against anyone who asserts their rights under the law. Retaliation subjects an employer to civil penalties, a private lawsuit or both.

Independent Contractors: If you are an independent contractor*:*

- You must pay all taxes required by New York State and Federal Law.

Penalties for paying off-the-books or improperly treating employees as independent contractors:

- **Civil Penalty** — First Offense: up to $2,500 per employee.
  Subsequent Offense(s): up to $5,000 per employee.

- **Criminal Penalty** — First Offense: Misdemeanor - up to 30 days in jail, up to a $25,000 fine and debarment from performing Public Work for up to one year.
  Subsequent Offense(s): Misdemeanor - up to 60 days in jail, up to a $50,000 fine and debarment from performing Public Work for up to 5 years.

If you have questions about your employment status or believe that your employer may have violated your rights and you want to file a complaint, call the Department of Labor at 1(866)435-1499 or send an email to dol.misclassified@labor.state.ny.us. All complaints of fraud and violations are taken seriously and you can remain anonymous.

Employer Name:

IA 999 (09/10)

WORKER NOTIFICATION

(Labor Law §220, paragraph a of subdivision 3-a)

Effective February 24, 2008

This provision is an addition to the existing prevailing wage rate law, Labor Law §220, paragraph a of subdivision 3-a. It requires contractors and subcontractors to provide written notice to all laborers, workers or mechanics of the *prevailing wage rate* for their particular job classification *on each pay stub**. It also requires contractors and subcontractors to *post a notice* at the beginning of the performance of every public work contract *on each job site* that includes the telephone number and address for the Department of Labor and a statement informing laborers, workers or mechanics of their right to contact the Department of Labor if he/she is not receiving the proper prevailing rate of wages and/or supplements for his/her particular job classification. The required notification will be provided with each wage schedule, may be downloaded from our website *www.labor.state.ny.us* or made available upon request by contacting the Bureau of Public Work at 518-457-5589.

* In the event that the required information will not fit on the pay stub, an accompanying sheet or attachment of the information will suffice.

(11.11)

New York State Department of Labor
Bureau of Public Work

Attention Employees

THIS IS A:

PUBLIC WORK PROJECT

If you are employed on this project as a **worker, laborer, or mechanic** you are entitled to receive the **prevailing wage and supplements rate** for the classification at which you are working.

Chapter 629 of the Labor Laws of 2007:

These wages are set by law and must be posted at the work site. They can also be found at: www.labor.ny.gov

If you feel that you have not received proper wages or benefits, please call our nearest office.*

Albany	(518) 457-2744	Patchogue	(631) 687-4882
Binghamton	(607) 721-8005	Rochester	(585) 258-4505
Buffalo	(716) 847-7159	Syracuse	(315) 428-4056
Garden City	(516) 228-3915	Utica	(315) 793-2314
New York City	(212) 932-2419	White Plains	(914) 997-9507
Newburgh	(845) 568-5156		

* For New York City government agency construction projects, please contact the Office of the NYC Comptroller at (212) 669-4443, or www.comptroller.nyc.gov – click on Bureau of Labor Law.

Contractor Name: _____

Project Location: _____

OSHA 10-hour Construction

Safety and Health Course – S1537-A

Effective July 18, 2008

This provision is an addition to the existing prevailing wage rate law, Labor Law §220, section 220-h. It requires that on all public work projects of at least $250,000.00, all laborers, workers and mechanics working on the site, be certified as having successfully completed the OSHA 10-hour construction safety and health course. It further requires that the advertised bids and contracts for every public work contract of at least $250,000.00, contain a provision of this requirement.

NOTE: ***The OSHA 10 Legislation only applies to workers on a public work project that are required, under Article 8, to receive the prevailing wage.***

Where to find OSHA 10-hour Construction Course

1. NYS Department of Labor website for scheduled outreach training at:

   www.labor.state.ny.us/workerprotection/safetyhealth/DOSH_ONSITE_CONSULTATION.shtm

2. OSHA Training Institute Education Centers:

   Rochester Institute of Technology OSHA Education Center
   Rochester, NY
   Donna Winter
   Fax (585) 475-6292
   e-mail: dlwtpo@rit.edu
   (866) 385-7470 Ext. 2919
   www.rit.edu/~outreach/course.php3?CourseID=54

   Atlantic OSHA Training Center
   UMDNJ – School of Public Health
   Piscataway, NJ
   Janet Crooks
   Fax (732) 235-9460
   e-mail: crooksje@umdnj.edu
   (732) 235-9455
   https://ophp.umdnj.edu/wconnect/ShowSchedule.awp?~~GROUP~AOTCON~10~

   Atlantic OSHA Training Center
   University at Buffalo
   Buffalo, New York
   Joe Syracuse
   Fax (716) 829-2806
   e-mail:mailto:japs@buffalo.edu
   (716) 829-2125
   http://www.smbs.buffalo.edu/CENTERS/trc/schedule_OSHA.php

   Keene State College
   Manchester, NH
   Leslie Singleton
   e-mail: lsingletin@keene.edu
   (800) 449-6742
   www.keene.edu/courses/print/courses_osha.cfm

3. List of trainers and training schedules for OSHA outreach training at:

   www.OutreachTrainers.org

Requirements for OSHA 10 Compliance

Chapter 282 of the Laws of 2007, codified as Labor Law 220-h took effect on July 18, 2008. The statute provides as follows:

The advertised specifications for every contract for public work of $250,000.00 or more must contain a provision requiring that every worker employed in the performance of a public work contract shall be certified as having completed an OSHA 10 safety training course. The clear intent of this provision is to require that all employees of public work contractors, required to be paid prevailing rates, receive such training "prior to the performing any work on the project."

The Bureau will enforce the statute as follows:

All contractors and sub contractors must attach a copy of proof of completion of the OSHA 10 course to the first certified payroll submitted to the contracting agency and on each succeeding payroll where any new or additional employee is first listed.

Proof of completion may include but is not limited to:

- Copies of bona fide course completion card (*Note: Completion cards do not have an expiration date.*)
- Training roster, attendance record of other documentation from the certified trainer pending the issuance of the card.
- Other valid proof

**A certification by the employer attesting that all employees have completed such a course is not sufficient proof that the course has been completed.

Any questions regarding this statute may be directed to the New York State Department of Labor, Bureau of Public Work at 518-485-5696.

WICKS Reform 2008

(For all contracts advertised or solicited for bid on or after 7/1/08)

- Raises the threshold for public work projects subject to the Wicks Law requiring separate specifications and bidding for the plumbing, heating and electrical work. The total project's threshold would increase from $50,000 to: $3 million in Bronx, Kings, New York, Queens and Richmond counties; $1.5 million in Nassau, Suffolk and Westchester counties; and $500,000 in all other counties.

- For projects below the monetary threshold, bidders must submit a sealed list naming each subcontractor for the plumbing, HVAC and electrical work and the amount to be paid to each. The list may not be changed unless the public owner finds a legitimate construction need, including a change in specifications or costs or use of a Project Labor Agreement (PLA), and must be open to public inspection.

- Allows the state and local agencies and authorities to waive the Wicks Law and use a PLA if it will provide the best work at the lowest possible price. If a PLA is used, all contractors shall participate in apprentice training programs in the trades of work it employs that have been approved by the Department of Labor (DOL) for not less than three years. They shall also have at least one graduate in the last three years and use affirmative efforts to retain minority apprentices. PLA's would be exempt from Wicks, but deemed to be public work subject to prevailing wage enforcement.

- The Commissioner of Labor shall have the power to enforce separate specification requirements on projects, and may issue stop-bid orders against public owners for non-compliance.

- Other new monetary thresholds, and similar sealed bidding for non-Wicks projects, would apply to certain public authorities including municipal housing authorities, NYC Construction Fund, Yonkers Educational Construction Fund, NYC Municipal Water Finance Authority, Buffalo Municipal Water Finance Authority, Westchester County Health Care Association, Nassau County Health Care Corp., Clifton-Fine Health Care Corp., Erie County Medical Center Corp., NYC Solid Waste Management Facilities, and the Dormitory Authority.

- Reduces from 15 to 7 days the period in which contractors must pay subcontractors.

IMPORTANT INFORMATION

Regarding Use of Form PW30R

"Employer Registration for Use of 4 Day / 10 Hour Work Schedule"

To use the '4 Day / 10 Hour Work Schedule':

There MUST be a *Dispensation of Hours (PW30)* in place on the project

AND

You MUST register your intent to work 4 / 10 hour days, by completing the PW30R Form.

REMEMBER…

The '4 Day / 10 Hour Work Schedule' applies ONLY to Job Classifications and Counties listed on the PW30R Form.

Do not write in any additional Classifications or Counties.

(**Please note** : For each Job Classification check the individual wage schedule for specific details regarding their 4/10 hour day posting.)

Instructions for Completing Form PW30R

"Employer Registration for Use of 4 Day / 10 Hour Work Schedule"

Before completing Form PW30R check to be sure …

- There is a *Dispensation of Hours* in place on the project.
- The 4 Day / 10 Hour Work Schedule applies to the Job Classifications you will be using.
- The 4 Day / 10 Hour Work Schedule applies to the County / Counties where the work will take place.

Instructions (Type or Print legibly):

Contractor Information:

- Enter the Legal Name of the business, FEIN, Street Address, City, State, Zip Code; the Company's Phone and Fax numbers; and the Company's email address (if applicable)
- Enter the Name of a Contact Person for the Company along with their Phone and Fax numbers, and the personal email address (if applicable)

Project Information:

- Enter the Prevailing Rate Case number (PRC#) assigned to this project
- Enter the Project Name / Type (i.e. Smithtown CSD – Replacement of HS Roof)
- Enter the Exact Location of Project (i.e. Smithtown HS, 143 County Route #2, Smithtown,NY; Bldgs. 1 & 2)
- If you are a Subcontractor, enter the name of the Prime Contractor for which you work
- On the Checklist of Job Classifications -
  - Go to pages 2 and 3 of the form
  - Place a checkmark in the box to the right of the Job Classification you are choosing
  - Mark all Job Classifications that apply

    ****Do not write in any additional Classifications or Counties.****

Requestor Information:

- Enter the name of the person submitting the registration, their title with the company , and the date the registration is filled out

Return Completed Form:

- **Mail** the completed PW30R form (3 pages) to: NYSDOL Bureau of Public Work, SOBC – Bldg.12 – Rm.130, Albany, NY 12240 -***OR -***
- **Fax** the completed PW30R form (3 pages) to: NYSDOL Bureau of Public Work at (518)485-1870

Bureau of Public Work
Harriman State Office Campus
Building 12 - Room 130
Albany, New York 12240
Phone - (518) 457-5589 Fax - (518) 485-1870

Employer Registration for Use of 4 Day / 10 Hour Work Schedule

Before completing Form PW30R check to be sure …
There is a *Dispensation of Hours* in place on the project.
The 4 Day / 10 Hour Work Schedule applies to the Job Classifications you will be using.
The 4 Day / 10 Hour Work Schedule applies to the County / Counties where the work will take place.

Please Type or Print the Requested Information

When completed …
Mail to NYSDOL Bureau of Public Work, SOBC, Bldg. 12, Rm.130, Albany, NY 12240
-or-
Fax to NYSDOL Bureau of Public Work at (518) 485-1870

Contractor Information

Company Name: _____ FEIN: _____

Address: _____

City: _____ State: _____ Zip Code: _____

Phone Number _____ Fax Number: _____ Email Address: _____

Contact Person: _____

Phone No: _____ Fax No: _____ Email: _____

Project Information

Project PRC#: _____ Project Name/Type: _____

Exact Location of Project: _____ County: _____

(If you are Subcontractor)
Prime Contractor Name: _____

Job Classification(s) to Work 4/10 Schedule: *(Choose all that apply on Job Classification Checklist - Pages 3 -7)*
**** Do not write in any additional Classifications or Counties****

Requestor Information

Name: _____

Title: _____ Date : _____

Please use the list below with the number assigned to each county as a reference to the corresponding numbers listed in the following pages under "Entire Counties" & "Partial Counties".

1. Albany County
2. Allegany County
3. Bronx County
4. Broome County
5. Cattaraugus County
6. Cayuga County
7. Chautauqua County
8. Chemung County
9. Chenango County
10. Clinton County
11. Columbia County
12. Cortland County
13. Delaware County
14. Dutchess County
15. Erie County
16. Essex County
17. Franklin County
18. Fulton county
19. Genesee County
20. Greene County
21. Hamilton County
22. Herkimer County
23. Jefferson County
24. Kings County (Brooklyn)
25. Lewis County
26. Livingston County
27. Madison County
28. Monroe County
29. Montgomery County
30. Nassau County
31. New York County (Manhattan)
32. Niagara County
33. Oneida County
34. Onondaga County
35. Ontario County
36. Orange County
37. Orleans County
38. Oswego County
39. Otsego County
40. Putnam County
41. Queens County
42. Rensselaer County
43. Richmond County (Staten Island)
44. Rockland County
45. Saint Lawrence County
46. Saratoga County
47. Schenectady County
48. Schoharie County
49. Schuyler County
50. Seneca County
51. Steuben County
52. Suffolk County
53. Sullivan County
54. Tioga County
55. Tompkins County
56. Ulster County
57. Warren county
58. Washington County
59. Wayne County
60. Westchester County
61. Wyoming County
62. Yates County

Job Classification Checklist

(Place a checkmark by all classifications that will be using the 4/10 schedule)

**** Do not write in any additional Classifications or Counties****

Job Classification	Tag #	Entire Counties	Partial Counties	Check Box
Carpenter-Building	276B-All	7	2 ,5	☐
Carpenter-Building	276B-Cat	15	5	☐
Carpenter - Building	276-B--LIV	26, 28, 35, 59	61	☐
Carpenter-Building	276B-Gen	19, 32, 37	61	☐
Carpenter-Floor Layers	276B-FL-Liv	26, 28, 35, 59	61	☐
Carpenter-Heavy&Highway	276HH-All	2, 5, 7		☐
Carpenter-Heavy&Highway	276HH-Erie	15		☐
Carpenter-Heavy&Highway	276HH- Gen	19, 32, 37, 61		☐
Carpenter-Heavy&Highway	276HH-Liv	26, 28, 35, 59		☐
Carpenter-Residential	276R-All	7	2, 5	☐
Carpenter - Building	277B-Bro	4, 54		☐
Carpenter - Building	277B-CAY	6, 50, 62		☐
Carpenter - Building	277B-CS	8, 12, 49, 51, 55	2	☐
Carpenter - Building	277 JLS	23, 25, 45		☐
Carpenter - Building	277 omh	22, 27, 33		☐
Carpenter - Building	277 On	34		☐
Carpenter - Building	277 Os	38		☐
Carpenter - Building	277CDO Bldg	9, 13, 39		☐
Carpenter - Heavy&Highway	277CDO HH	9, 13, 39		☐
Carpenter - Heavy&Highway	277HH-BRO	4, 6, 8, 12, ,22, 23, 25, 27, 33, 34, 38, 45, 49, 50, 51, 54, 55, 62		☐
Carpenter - Building	291B-Alb	1, 18, 20, 29, 42, 47, 48		☐
Carpenter - Building	291B-Cli	10, 16, 17		☐
Carpenter - Building	291B-Ham	21, 57, 58		☐
Carpenter - Building	291B-Sar	46		☐
Carpenter - Heavy&Highway	291HH-Alb	1, 10, 16, 17,18, 20, 21, 29, 42, 46, 47, 48, 57, 58		☐
Electrician	25m	30, 52		☐
Electrician-Teledata Cable Splicer	43	12, 22, 27, 33, 38	6, 9, 34, 39, 55, 59	☐

Job Classification Checklist

(Place a checkmark by all classifications that will be using the 4/10 schedule)

**** Do not write in any additional Classifications or Counties****

Job Classification	Tag #	Entire Counties	Partial Counties	Check Box
Electrician	86	26, 28	19, 35, 37, 59, 61	☐
Electrician	840Teledata and 840 Z1	62	6, 34, 35, 50, 59	☐
Electrician	910	10, 16, 17, 23, 25, 45		☐
Electrician Lineman	1049Line/Gas	30, 41, 52		☐
Electrician Lineman	1249a	1, 2, 4, 5, 6, 7, 8, 9, 10, 11, 12, 13, 14, 15, 16, 17, 18, 19, 20, 21, 22, 23, 25, 26, 27, 28, 29, 32, 33, 34, 35, 36, 37, 38, 39, 40, 42, 44, 46, 47, 48, 49, 50, 45, 51, 53, 54, 55, 56, 57, 58, 59, 61, 62		☐
Electrical Lineman	1249a West	60		☐
Electrical Lineman	1249a-LT	1, 2, 4, 5, 6, 7, 8, 9, 10, 12, 13, 15, 16, 17, 18, 19, 20, 21, 22, 23, 25, 26, 27, 28, 29, 32, 33, 34, 35, 37, 38, 39, 42, 46, 47, 48, 49, 50, 45, 51, 53, 54, 55, 57, 58, 59, 61, 62		☐
Electrical Lineman	1249aREG8LT	11, 14, 36, 40, 44, 56		☐
Electrical Lineman	1249aWestLT	60		☐
Elevator Constructor	138	11, 14, 20, 36, 40, 53, 56	13, 44, 60	☐
Elevator Constructor	14	2, 5, 7, 15, 19, 32, 37, 61		☐
Elevator Constructor	27	8, 26, 28, 35, 49, 50, 51, 59, 62		☐
Elevator Constructor	35	1, 10, 16, 18, 21, 22, 29, 39, 42, 46, 47, 48, 57, 58		☐
Elevator Constructor	62.1	4, 6, 9, 12, 23, 25, 27, 33, 34, 38, 45, 54, 55	13	☐
Glazier	201	1, 10, 11, 16, 17, 18, 20, 21, 29, 42, 46, 47, 48, 57, 58		☐
Glazier	660r	2, 5, 7, 15, 19, 32, 37, 61		☐
Glazier	660	2, 5, 7, 15, 19, 32, 37, 61		☐
Glazier	677.1	23, 25, 26, 28, 35, 45, 50, 59, 62		☐
Glazier	677Z-2	6, 12, 22, 27, 33, 34, 38		☐
Glazier	677z3	4, 8, 9, 13, 39, 49, 51, 54, 55		☐
Glazier	677r.2	6, 12, 22, 27, 33, 34, 38		☐
Insulator - Heat & Frost	30-Syracuse	4, 6, 8, 9, 12, 22, 23, 25, 27, 33, 34, 38, 39, 49, 50, 45, 54, 55		☐
Laborers- Tunnel	157	47	18, 29, 46	☐
Laborers- Heavy & Highway	157h/h	47	18, 29, 46	☐

Job Classification Checklist

(Place a checkmark by all classifications that will be using the 4/10 schedule)

**** Do not write in any additional Classifications or Counties****

Job Classification	Tag #	Entire Counties	Partial Counties	Check Box
Laborers- Heavy & Highway	1822/2h	10,16,57		☐
Laborers- Heavy & Highway	1822/2h(2)	17, 23, 25, 45		☐
Laborers- Tunnel	1822T	10, 16 57		☐
Laborers- Tunnel	1822T(2)	17, 23, 25, 45		☐
Laborers- Tunnel	35T	21, 22, 27, 33	18, 29	☐
Laborers- Tunnel	190	1, 42, 58	11, 20, 46	☐
Laborers- Heavy & Highway	190 h/h	1, 42, 58	11, 20, 46	☐
Laborers- Heavy & Highway	35/2h	21, 22, 27, 33	18, 29	☐
Laborers- Tunnel	35T	21, 22, 27, 33	18, 29	☐
Laborers- Heavy & Highway	633hON	34		☐
Laborers- Heavy & Highway	633hOS	38		☐
Laborers- Heavy & Highway	633h Cay	6		☐
Laborers- building	633 bON	34		☐
Laborers- building	633b Cay	6		☐
Laborers- building	633bOS	38		☐
Laborers- Tunnel	633T (Cay)	6		☐
Laborers- Tunnel	633T (ON)	34		☐
Laborers- Tunnel	633T (OS)	38		☐
Laborers- Heavy & Highway	785h	12, 55	49, 54	☐
Laborers-Tunnel	785T	12, 55		☐
Laborers - Building	785(7)	4	9, 13, 54	☐
Laborers - Building	785B-CS	8, 51	49	☐
Laborers- Heavy & Highway	7-785b	12, 55	49, 54	☐
Laborers Heavy & Highway	785(7)	4	9, 13, 54	☐
Laborer - Heavy & Highway	785HH-CS	8, 51	49	☐
Laborer - Building	621b	2, 7	5	☐
Laborer - Residential	621r	2, 7	5	☐

Job Classification Checklist

(Place a checkmark by all classifications that will be using the 4/10 schedule)

**** Do not write in any additional Classifications or Counties****

Job Classification	Tag #	Entire Counties	Partial Counties	Check Box
Mason-Building	2TS.1	1, 10,11, 16, 17, 18, 20, 21, 29, 42, 46, 47, 48, 57, 58		☐
Mason-Building	2TS.2	22, 23, 25, 33, 45	27	☐
Mason-Building	2TS.3	6, 34, 38	27	☐
Mason-Building	2b-on	34		☐
Mason-Building	2b.1	1, 11, 18, 20, 21, 29, 42, 46, 47, 48, 58	57	☐
Mason-Building	2b.2	22, 33	25	☐
Mason-Building	2b.3	6, 34	27	☐
Mason-Building	2b.4	38		☐
Mason-Building	2b.5	23	25	☐
Mason-Building	2b.6	45		☐
Mason-Building	2b.8	10, 16, 17	57	☐
Mason-Building	2b.5	23	25	☐
Mason-Building	2b.6	45		☐
Mason-Building	2b.8	10, 16, 17	57	☐
Mason-Building	3b-Co-Z2	8, 49, 51	2	☐
Mason-Building	3B-Z1	19, 26, 28, 35, 50, 59, 61, 62		☐
Mason-Building-Residential	3B-Z1R	19, 26, 28, 35, 50, 59, 61, 62		☐
Mason-Building	3B-Bing-Z2	4, 9, 13, 39, 54		☐
Mason-Building	3B-Ith-Z2	12, 55		☐
				☐
				☐
				☐
				☐
				☐
				☐

Job Classification Checklist

(Place a checkmark by all classifications that will be using the 4/10 schedule)

**** Do not write in any additional Classifications or Counties****

Job Classification	Tag #	Entire Counties	Partial Counties	Check Box
Mason-Building	3B-Jam-Z2	7	2, 5	☐
Mason-Building-Residential	3B-Jam-Z2R	2, 4, 8, 7, 9, 12, 39, 13, 49, 51, 54, 55	5	☐
Mason-Building	3B-Z3	15, 32	5	☐
Mason-Building	3B-Z3.Orleans	37		☐
Mason-Residential	3B-Z3R	15, 32	5	☐
Mason-Residential	3B-Z3R.Orleans	37		☐
Mason-Heavy Highway	3h	2, 4, 8, 7, 9, 12, 13, 19, 26, 28, 35, 37, 39, 49, 50, 51, 54, 55, 59, 61, 62	5, 15, 32	☐
Mason-Tile Finisher	3TF-Z1	19, 26, 28, 35, 50, 59, 61, 62		☐
Mason-Tile Finisher	3TF-Z2	2, 4, 8, 7, 9, 12, 13, 39, 49, 51, 54, 55	5	☐
Mason-Tile Finisher	3TF-Z3	15, 32, 37	5	☐
Mason-Tile Finisher	3TF-Z1R	19, 26, 28, 35, 50, 59, 61, 62		☐
Mason-Tile Finisher	3TF-Z2R	2, 4, 7, 9, 12, 13, 39, 49, 51, 54, 55	5	☐
Mason-Tile Finisher	3TF-Z3R	15, 32, 37	5	☐
Mason-Tile Setter	3TS-Z1	19, 26, 28, 35, 50, 59, 61, 62		☐
Mason-Tile Setter Residential	3TS-Z1R	19, 26, 28, 35, 50, 59, 61, 62		☐
Mason-Tile Setter	3TS-Z2	2, 4, 7, 8, 9, 12, 13, 39, 49, 51, 54, 55	5	☐
Mason-Tile Setter Residential	3TS-Z2R	2, 4, 7, 8, 9, 12, 13, 39, 49, 51, 54, 55	5	☐
Mason-Tile Setter Residential	3TS-Z3R	15, 32, 37	5	☐
Mason - Building/Heavy&Highway	780	3, 24, 30, 31, 41, 43, 52		☐
Operating Engineer - Heavy/Highway	137H/H	40, 60	14	☐
Operating Engineer - Heavy& Highway	158-832H	2, 8, 26, 28, 35, 49, 51, 59, 62	19	☐
Operating Engineer - Heavy& Highway	158-H/H	1, 4, 9, 10, 11, 14, 16, 17, 18, 20, 21, 22, 29, 39, 42, 46, 47, 48, 54, 57, 58		☐
Operating Engineer - Heavy& Highway	158-545h	6, 12, 23, 25, 27, 33, 38, 45, 50, 55		☐
Painter	1456-LS	1, 3, 10, 11, 14, 16, 17, 18, 20, 21, 24, 29, 30, 31, 36, 40, 41, 42, 43, 44, 46, 47, 48, 52, 53, 56, 57, 58, 60		☐
Painter	150	28, 59, 62	26, 35	☐

Job Classification Checklist

(Place a checkmark by all classifications that will be using the 4/10 schedule)

**** Do not write in any additional Classifications or Counties****

Job Classification	Tag #	Entire Counties	Partial Counties	Check Box
Painter	178 B	4, 9, 54		☐
Painter	178 E	8, 49	51	☐
Painter	178 I	12, 55		☐
Painter	178 O	13, 39		☐
Painter	31	6, 22, 27, 33, 34, 50	25, 35, 38	☐
Painter	38.O		38	☐
Painter	38.W	23, 45	25	☐
Painter	4-Buf,Nia,Olean	2, 15, 19, 32, 37, 61	5, 7, 26, 51	☐
Painter	4-Jamestown		5, 7	☐
Painter	38.O		38	☐
Painter	38.W	23, 45	25	☐
Painter	4-Buf,Nia,Olean	2, 15, 19, 32, 37, 61	5, 7, 26, 51	☐
Painter	4-Jamestown		5, 7	☐
Sheetmetal Worker	46	26, 28, 35, 50, 59, 62		☐
Sheetmetal Worker	46r	26, 28, 35, 50, 59, 62		☐
Teamsters-Heavy&Highway	294h/h	1, 11, 18, 20, 29, 42, 46, 47, 48, 58	57	☐
Teamsters-Heavy&Highway	317bhh	6, 12, 50, 51, 55, 62	2	☐
Teamsters-Building/Heavy&Highway	456	40, 60		☐

Introduction to the Prevailing Rate Schedule

Information About Prevailing Rate Schedule

This information is provided to assist you in the interpretation of particular requirements for each classification of worker contained in the attached Schedule of Prevailing Rates.

Classification

It is the duty of the Commissioner of Labor to make the proper classification of workers taking into account whether the work is heavy and highway, building, sewer and water, tunnel work, or residential, and to make a determination of wages and supplements to be paid or provided. It is the responsibility of the public work contractor to use the proper rate. If there is a question on the proper classification to be used, please call the district office located nearest the project. District office locations and phone numbers are listed below.

Prevailing Wage Schedules are issued separately for "General Construction Projects" and "Residential Construction Projects" on a county-by-county basis.

General Construction Rates apply to projects such as: Buildings, Heavy & Highway, and Tunnel and Water & Sewer rates.

Residential Construction Rates generally apply to construction, reconstruction, repair, alteration, or demolition of one family, two family, row housing, or rental type units intended for residential use.

Some rates listed in the Residential Construction Rate Schedule have a very limited applicability listed along with the rate. Rates for occupations or locations not shown on the residential schedule must be obtained from the General Construction Rate Schedule. Please contact the local Bureau of Public Work office before using Residential Rate Schedules, to ensure that the project meets the required criteria.

Paid Holidays

Paid Holidays are days for which an eligible employee receives a regular day's pay, but is not required to perform work. If an employee works on a day listed as a paid holiday, this remuneration is in addition to payment of the required prevailing rate for the work actually performed.

Overtime

At a minimum, all work performed on a public work project in excess of eight hours in any one day or more than five days in any workweek is overtime. However, the specific overtime requirements for each trade or occupation on a public work project may differ. Specific overtime requirements for each trade or occupation are contained in the prevailing rate schedules.

Overtime holiday pay is the premium pay that is required for work performed on specified holidays. It is only required where the employee actually performs work on such holidays.

The applicable holidays are listed under HOLIDAYS: OVERTIME. The required rate of pay for these covered holidays can be found in the OVERTIME PAY section listings for each classification.

Supplemental Benefits

Particular attention should be given to the supplemental benefit requirements. In most cases the payment or provision of supplements is for each hour worked (noted in the schedule as 'Per hour worked'). Some classifications require the payment or provision of supplements for each hour paid (noted in the schedule as 'Per hour paid'), which require supplements to be paid or provided at a premium rate for premium hours worked. Some classifications may also require the payment or provision of supplements for paid holidays on which no work is performed.

Effective Dates

When you review the schedule for a particular occupation, your attention should be directed to the dates above the column of rates. These are the dates for which a given set of rates is effective. The rate listed is valid until the next effective rate change or until the new annual determination which takes effect on July 1 of each year. All contractors and subcontractors are required to pay the current prevailing rates of wages and supplements. If you have any questions please contact the Bureau of Public Work or visit the New York State Department of Labor website (www.labor.state.ny.us) for current wage rate information.

Apprentice Training Ratios

The following are the allowable ratios of registered Apprentices to Journey-workers.

For example, the ratio 1:1,1:3 indicates the allowable initial ratio is one Apprentice to one Journeyworker. The Journeyworker must be in place on the project before an Apprentice is allowed. Then three additional Journeyworkers are needed before a second Apprentice is allowed. The last ratio repeats indefinitely. Therefore, three more Journeyworkers must be present before a third Apprentice can be hired, and so on.

Please call Apprentice Training Central Office at (518) 457-6820 if you have any questions.

Title (Trade)	Ratio
Boilermaker (Construction)	1:1,1:4
Boilermaker (Shop)	1:1,1:3
Carpenter (Bldg.,H&H, Pile Driver/Dockbuilder)	1:1,1:4
Carpenter (Residential)	1:1,1:3

Electrical (Outside) Lineman	1:1,1:2
Electrician (Inside)	1:1,1:3
Elevator/Escalator Construction & Modernizer	1:1,1:2
Glazier	1:1,1:3
Insulation & Asbestos Worker	1:1,1:3
Iron Worker	1:1,1:4
Laborer	1:1,1:3
Mason	1:1,1:4
Millwright	1:1,1:4
Op Engineer	1:1,1:5
Painter	1:1,1:3
Plumber & Steamfitter	1:1,1:3
Roofer	1:1,1:2
Sheet Metal Worker	1:1,1:3
Sprinkler Fitter	1:1,1:2

If you have any questions concerning the attached schedule or would like additional information, please contact the nearest BUREAU of PUBLIC WORK District Office or write to:

New York State Department of Labor
Bureau of Public Work
State Office Campus, Bldg. 12
Albany, NY 12240

District Office Locations:	Telephone #	FAX #
Bureau of Public Work - Albany	518-457-2744	518-485-0240
Bureau of Public Work - Binghamton	607-721-8005	607-721-8004
Bureau of Public Work - Buffalo	716-847-7159	716-847-7650
Bureau of Public Work - Garden City	516-228-3915	516-794-3518
Bureau of Public Work - Newburgh	845-568-5287	845-568-5332
Bureau of Public Work - New York City	212-932-2419	212-775-3579
Bureau of Public Work - Patchogue	631-687-4882	631-687-4902
Bureau of Public Work - Rochester	585-258-4505	585-258-4708
Bureau of Public Work - Syracuse	315-428-4056	315-428-4671
Bureau of Public Work - Utica	315-793-2314	315-793-2514
Bureau of Public Work - White Plains	914-997-9507	914-997-9523
Bureau of Public Work - Central Office	518-457-5589	518-485-1870

Suffolk County General Construction

Asbestos Worker 01/01/2017

JOB DESCRIPTION Asbestos Worker **DISTRICT** 4

ENTIRE COUNTIES
Bronx, Kings, Nassau, New York, Queens, Richmond, Suffolk

WAGES

Per Hour:	07/01/2016
Abestos Worker Removal & Abatement Only*	$ 44.00

NOTE: *On Mechanical Systems that are NOT to be SCRAPPED.

SUPPLEMENTAL BENEFITS

Per Hour:	
Abestos Worker Removal & Abatement Only	$ 8.70

OVERTIME PAY
See (B, B2, *E, J) on OVERTIME PAGE
Hours worked on Saturdays are paid at time and one half only if forty hours have been worked during the week.

HOLIDAY
Paid: See (1) on HOLIDAY PAGE
Overtime: See (5, 6, 8) on HOLIDAY PAGE

REGISTERED APPRENTICES
Apprentice Removal & Abatement Only:
1000 hour terms at the following percentage of Journeyman's rates.

1st	2nd	3rd	4th
78%	80%	83%	89%

SUPPLEMENTAL BENEFIT

Per Hour:	
Apprentice Removal & Abatement	$ 8.70

4-12a - Removal Only

Boilermaker 01/01/2017

JOB DESCRIPTION Boilermaker **DISTRICT** 4

ENTIRE COUNTIES
Bronx, Dutchess, Kings, Nassau, New York, Orange, Putnam, Queens, Richmond, Rockland, Suffolk, Sullivan, Ulster, Westchester

WAGES

Per Hour:	07/01/2016
Boilermaker	$ 51.56
Repairs & Renovations	$ 51.56

SUPPLEMENTAL BENEFITS

Per Hour:	07/01/2016
Boilermaker Repairs & Renovations	32% of hourly Wage Paid + $25.19

NOTE: "Hourly Wage Paid" shall include any and all premium(s) pay.

Repairs & Renovation Includes replacement of parts and repairs & renovation of existing unit.

OVERTIME PAY
OVERTIME PAY
See (D, O) on OVERTIME PAGE
HOLIDAY
Paid: See (8, 16, 23, 24) on HOLIDAY PAGE

Overtime: See (5, 6, 11, 12, 15, 25) on HOLIDAY PAGE
NOTE: *Employee must work in pay week to receive Holiday Pay.
**Boilermarker gets 4 times the hourly wage rate for working on Labor Day.
***Repairs & Renovation see (B,E,Q) on HOLIDAY PAGE

HOLIDAY

REGISTERED APPRENTICES
Wage per hour:
(1/2) Year Terms at the following pecentage of Boilermaker's Wage

1st	2nd	3rd	4th	5th	6th	7th	8th
65%	65%	70%	75%	80%	85%	90%	95%

Supplemental Benefits Per Hour:

Apprentice(s)	07/01/2016 32% of Hourly Wage Paid Plus Amount Below
1st Term	$ 19.27
2nd Term	20.11
3rd Term	20.95
4th Term	21.80
5th Term	22.65
6th Term	23.49
7th Term	24.33

NOTE: "Hourly Wage Paid" shall include any and all premium(s)

4-5

Carpenter 01/01/2017

JOB DESCRIPTION Carpenter **DISTRICT** 8

ENTIRE COUNTIES
Bronx, Kings, Nassau, New York, Putnam, Queens, Richmond, Rockland, Suffolk, Westchester

WAGES
Per hour: 07/01/2016

Piledriver	$ 51.63
Dockbuilder	$ 51.63

SUPPLEMENTAL BENEFITS
Per hour worked:

Journeyworker	$ 48.62

OVERTIME PAY
See (B, E2, O) on OVERTIME PAGE

HOLIDAY
Paid: See (1)on HOLIDAY PAGE.

Paid: for 1st & 2nd yr.
Apprentices See (5,6,11,13,25)

Overtime: See (5,6,11,13,25) on HOLIDAY PAGE.

REGISTERED APPRENTICES
Wages per hour
(1)year terms:

1st	2nd	3rd	4th
$20.65	$25.82	$33.56	$41.30

Supplemental benefits per hour:

Apprentices	$ 32.49

8-1556 Db

Carpenter **01/01/2017**

JOB DESCRIPTION Carpenter **DISTRICT** 8

ENTIRE COUNTIES
Bronx, Dutchess, Kings, Nassau, New York, Putnam, Queens, Richmond, Rockland, Suffolk, Westchester

PARTIAL COUNTIES
Orange: The area lying on Southern side of Orange County demarcated by a line drawn from the Bear Mountain Bridge continuing east to the Bear Mountain Circle, continue North on 9W to the town of Cornwall where County Road 107 (also known as Quaker Rd) crosses under 9W, then east on County Road 107 to Route 32, then north on Route 32 to Orrs Mills Rd, then west on Orrs Mills Rd to Route 94, continue west and south on Route 94 to the Town of Chester, to the intersection of Kings Highway, continue south on Kings Highway to Bellvale Rd, west on Bellvale Rd to Bellvale Lakes Rd, then south on Bellvale Lakes Rd to Kain Rd, southeast on Kain Rd to Route 17A, then north and southeast along Route 17A to Route 210, then follow Route 210 to NJ Border.

WAGES
Per hour: 07/01/2016

Carpet/Resilient
Floor Coverer $ 50.50

INCLUDES HANDLING & INSTALLATION OF ARTIFICIAL TURF AND SIMILAR TURF INDOORS/OUTDOORS.

SUPPLEMENTAL BENEFITS
Per hour worked:

Floor Coverer $ 45.85

OVERTIME PAY
See (B, E, Q) on OVERTIME PAGE

HOLIDAY
Paid: See (18, 19)on HOLIDAY PAGE.

Paid: for 1st & 2nd yr.
Apprentices See (5,6,11,13,16,18,19,25)

Overtime: See (5,6,11,13,16,18,19,25) on HOLIDAY PAGE.

REGISTERED APPRENTICES
Wage per hour is Pecentage of Journeyworkers Wage

(1) year terms:

1st.	2nd.	3rd.	4th.
$20.20	$25.25	$32.83	$40.40

Supplemental benefits per hour:

$ 31.11

8-2287

Carpenter **01/01/2017**

JOB DESCRIPTION Carpenter **DISTRICT** 8

ENTIRE COUNTIES
Bronx, Dutchess, Kings, Nassau, New York, Orange, Putnam, Queens, Richmond, Rockland, Suffolk, Westchester

WAGES
Per Hour: 07/01/2016

Marine Construction:

Marine Diver $ 65.38
Marine Tender 46.44

SUPPLEMENTAL BENEFITS
Per Hour Worked:

Journeyman $ 48.62

OVERTIME PAY
See (B, E, E2, Q) on OVERTIME PAGE

HOLIDAY
Paid: See (18, 19) on HOLIDAY PAGE
Overtime: See (5, 6, 10, 11, 13, 16, 18, 19) on HOLIDAY PAGE

8-1456MC

Carpenter **01/01/2017**

JOB DESCRIPTION Carpenter **DISTRICT** 8

ENTIRE COUNTIES
Bronx, Kings, Nassau, New York, Putnam, Queens, Richmond, Rockland, Suffolk, Westchester

WAGES
Per hour: 07/01/2016

Building
Millwright $ 51.50

SUPPLEMENTAL BENEFITS
Per hour worked:

Millwright $ 52.38

OVERTIME PAY
See (B, E, Q) on OVERTIME PAGE

HOLIDAY
Paid: See (18,19)* on HOLIDAY PAGE.

Overtime See (5,6,8,11,13,18,19,25) on HOLIDAY PAGE.

* must show up to work

REGISTERED APPRENTICES
Wages per hour is Percentage of Journeyworkers wage:

(1) year terms:

1st.	2nd.	3rd.	4th.
$28.33	$33.48	$38.63	$48.93

Supplemental benefits per hour paid:

(1) year terms:

1st.	2nd.	3rd.	4th.
$34.25	$37.85	$42.10	$48.66

8-740.1

Carpenter **01/01/2017**

JOB DESCRIPTION Carpenter **DISTRICT** 8

ENTIRE COUNTIES
Bronx, Kings, Nassau, New York, Queens, Richmond, Suffolk, Westchester

WAGES
Per Hour:
07/01/2016

Timberman $ 46.99

SUPPLEMENTAL BENEFITS
Per Hour Worked:
07/01/2016

$ 48.23

OVERTIME PAY
See (B, E, E2, Q) on OVERTIME PAGE

HOLIDAY
Paid: See (1) on HOLIDAY PAGE.

Paid: for 1st & 2nd yr.

Apprentices See (5,6,11,13,25)

Overtime: See (5,6,11,13,25) on HOLIDAY PAGE.

REGISTERED APPRENTICES

Wages per hour:
(1) year terms:

1st	2nd	3rd	4th
$18.80	$23.50	$30.54	$37.59

Supplemental benefits per hour:
$ 32.30

8-1556 Tm

Carpenter 01/01/2017

JOB DESCRIPTION Carpenter **DISTRICT** 8

ENTIRE COUNTIES
Bronx, Kings, Nassau, New York, Queens, Richmond, Rockland, Westchester

PARTIAL COUNTIES
Orange: South of but including the following, Waterloo Mills, Slate Hill, New Hampton, Goshen, Blooming Grove, Mountainville, east to the Hudson River.
Putnam: South of but including the following, Cold Spring, TompkinsCorner, Mahopac, Croton Falls, east to Connecticut border.
Suffolk: West of Port Jefferson and Patchogue Road to Route 112 to the Atlantic Ocean.

WAGES

Per hour:	07/01/2016	10/17/2016
Core Drilling:		
Driller	$ 37.82	$ 38.82
Driller Helper	30.17	30.96

Additional Helpers: One (1) year increments. This is not an apprenticeship for Driller:

Helper 1st year	$ 21.12
Helper 2nd year	24.14
Helper 3rd year	27.15
Helper 4th year	30.17

Note: Hazardous Waste Pay Differential:
For Level C, an additional 10% above wage rate per hour
For Level B, an additional 10% above wage rate per hour
For Level A, an additional 10% above wage rate per hour
Note: When required to work on water: an additional $ 0.50 per hour.

SUPPLEMENTAL BENEFITS

Per hour worked:	07/01/2016	10/17/2016
Driller and All Helpers	$ 24.00	$ 24.66

OVERTIME PAY
OVERTIME: See (B,E,K*,P,R**) on OVERTIME PAGE.

HOLIDAY
Paid: See (5,6) on HOLIDAY PAGE.
Overtime: * See (5,6) on HOLIDAY PAGE.
** See (8,10,11,13) on HOLIDAY PAGE.

8-1536-CoreDriller

Carpenter - Building / Heavy&Highway 01/01/2017

JOB DESCRIPTION Carpenter - Building / Heavy&Highway **DISTRICT** 4

ENTIRE COUNTIES
Suffolk

PARTIAL COUNTIES
Nassau: Work performed "North of Southern State Parkway and East of Seaford Creek"

WAGES
Per Hour: 07/01/2016

Carpenter (Building)	$ 48.28
Carpenter (Heavy Highway)	$ 48.28

"NOTE" ADD 15% to straight time hourly wage for NEW YORK STATE D.O.T. and other GOVERMENTAL MANDATED Off-Shift Work.

SUPPLEMENTAL BENEFITS
Per Hour:

Both Carpenter Categories	$ 31.21

OVERTIME PAY
See (B, E, Q) on OVERTIME PAGE

HOLIDAY
Paid: See (1) on HOLIDAY PAGE
Overtime: See (5, 6, 16, 25) on HOLIDAY PAGE

REGISTERED APPRENTICES
One(1) Year Terms at the following:
Per Hour:

1st	2nd	3rd	4th
$ 23.12	$ 25.16	$ 29.22	$ 33.29

Supplemental Benefits
Per Hour:

All Terms: $ 17.65

4-Reg.Council Nass/Suff

Electrician 01/01/2017

JOB DESCRIPTION Electrician **DISTRICT** 4

ENTIRE COUNTIES
Nassau, Suffolk

WAGES

Per Hour:	07/01/2016
Telephone and Intergrated Tele-Data System Electrician	$ 36.78

This rate classification applies to ALL Voice, Data & Video work.: Excluding Fire Alarm Systems and Energy Managment Systems (HVAC Controls), in those cases the regular Electrician rate applies. To ensure proper use of this rate please call Nassau Offices at (516)228-3915 or Suffolk Offices at (631)687-4882.

SUPPLEMENTAL BENEFITS
Per Hour:

Tele-Data Electrican	16% of Hourly Wage Paid + $17.33

NOTE: "Hourly Wage Paid" shall include any and all premium(s) pay

OVERTIME PAY
See (B, E, E2, Q) on OVERTIME PAGE

HOLIDAY
Paid: See (1) on HOLIDAY PAGE
Overtime: See (5, 6, 15, 16, 25) on HOLIDAY PAGE

4-25tela

Electrician 01/01/2017

JOB DESCRIPTION Electrician **DISTRICT** 4

ENTIRE COUNTIES
Nassau, Suffolk

WAGES
Per Hour: 07/01/2016

Electrician
Electrical Maintenance $ 42.20
"PLEASE NOTE"
Applicable to "EXISTING ELECTRICAL SYSTEMS" including, but not limited to TRAFFIC SIGNALS & STREET LIGHTING. Not used for addons.

Four (4), ten (10) hour days may be worked at straight time during a week, Monday thru Thursday, with one-half (1/2) hour allowed for a lunch period.

NOTE - In order to use the '4 Day/10 Hour Work schedule', as your normal schedule, you must submit an 'Employer Registration for Use of 4 Day/10 Hour Work Schedule,' form PW30R; and there must be a dispensation of hours in place on the project. If the PW30R is not submitted you may be liable for overtime payments for work over 8 hours per day.

SUPPLEMENTAL BENEFITS
Per Hour:

Electrician 12% of Hourly Wage Paid + $ 16.83
NOTE: "Hourly Wage Paid" shall include any and all premium(s) pay

OVERTIME PAY
See (B, E2, K, P) on OVERTIME PAGE

HOLIDAY
Paid: See (1) on HOLIDAY PAGE
Overtime: See (5, 6, 15, 16, 25) on HOLIDAY PAGE

REGISTERED APPRENTICES
One(1) Year Term(s) at the following Percentage of Journeyman(s) Wage:

1st	2nd	3rd	4th	5th	6th
40%	50%	60%	70%	80%	90%

Supplemental Benefits:

	Apprentices Hired Prior to 04/26/2014	Apprentices Hired After 04/26/2014
	07/01/2016	07/01/2016
1st	12% + $9.90	3% + $3.50
2nd	12% + $10.79	8% + $4.04
3rd	12% + $11.70	9% + $5.06
4th	12% + $12.59	10% + $6.81
5th	12% + $13.48	11% + $10.76
6th	12% + $13.66	DNA

NOTE: Percentages are on "Hourly Wage Paid"
NOTE: "Hourly Wage Paid" shall include any and all premium(s) pay

4-25m

Electrician 01/01/2017

JOB DESCRIPTION Electrician **DISTRICT** 4

ENTIRE COUNTIES
Nassau, Suffolk

WAGES

Per Hour:	07/01/2016	05/01/2017
Electrician		
Pump & Tank	$ 40.45	$ 41.05

SUPPLEMENTAL BENEFITS
Per Hour:

Electrician		
Pump & Tank	65.25% of *Wage	65.25% of *Wage

	Paid	Paid

*Wage Paid includes any and all Premiums

OVERTIME PAY
See (B, E, Q) on OVERTIME PAGE

HOLIDAY
Paid: See (1) on HOLIDAY PAGE
Overtime: See (5, 6, 16, 25) on HOLIDAY PAGE

REGISTERED APPRENTICES
1 Year Terms at the Following:

Per Hour:

1st Term	$ 12.02	$ 12.32
2nd Term	$ 16.02	$ 14.37
3rd Term	$ 20.02	$ 16.42
4th Term	$ 24.03	$ 18.47
5th Term	$ 28.04	$ 24.63
6th Term	$ 34.04	$ 28.74

SUPPLEMENTAL BENEFITS

Per Hour:

All Terms	65.25% of *Wage Paid	65.25% of Wage Paid

*Wage Paid includes any and all Premiums

4-25 Pump & Tank

Electrician 01/01/2017

JOB DESCRIPTION Electrician **DISTRICT** 4

ENTIRE COUNTIES
Nassau, Suffolk

WAGES

Per Hour:	07/01/2016	04/29/2017
Electrician/Wireman	$ 51.00	$ 51.50
HVAC Controls	51.00	51.50
Fire Alarms	51.00	51.50

SUPPLEMENTAL BENEFITS

Per Hour:	07/01/2016	04/29/2017
Electrcian/Wireman (all catagories)	16% of Hourly Wage Paid + $24.09	16% of Hourly Wage Paid + $24.96

NOTE: "Hourly Wage Paid" shall include any and all premium[s]

OVERTIME PAY
See (B, E, E2, Q) on OVERTIME PAGE

HOLIDAY
Paid: See (1) on HOLIDAY PAGE
Overtime: See (5, 6, 15, 16, 25) on HOLIDAY PAGE

REGISTERED APPRENTICES
One(1) Year Terms at the following Percetage of Journeyman(s) Wage:

1st	2nd	3rd	4th	5th	6th
35%	35%	40%	45%	60%	75%

Supplemental Benefits Per Hour:

07/01/2016	04/29/2017

1st	3% + $2.71	3% + $2.87
2nd	8% + $4.08	8% + $4.84
3rd	9% + $4.95	9% + $6.04
4th	10% + $ 6.99	10% + $8.19
5th	13% + $10.64	13% + $11.03
6th	14% + $17.05	14% + $17.29

NOTE: Percentages are on "Hourly Wage Paid"
NOTE: "Hourly Wage Paid" shall include any and all premium(s).

4-25

Electrician 01/01/2017

JOB DESCRIPTION Electrician **DISTRICT** 4

ENTIRE COUNTIES
Nassau, Suffolk

WAGES

Per Hour:	07/01/2016	04/02/2017
Tree Trimmer/Remover Line Clearance Specialist	$ 31.77	$32.72
Ground Mean (Not to Exceed 20% of Work Force)	$19.06	$19.63

These rates apply to all tree trimming/removal contracts including but not limited to "Electrical Line Clearance"/"Long Island Railroad Right of Ways".

All tree removal for heavy highway or building construction contracts MUST use Heavy Highway Laborer and Operating Engineer classifications.

SUPPLEMENTAL BENEFITS

Per Hour:	07/01/2016	04/04/2017
Tree Trimmer/Remover Line Clearance Specialist and Ground Man	19.50% of Hourly Wage Paid + $9.41	19.75% of Hourly Wage Paid + $9.82

NOTE: "Hourly Wage Paid" shall include any and all premium(s) paid

OVERTIME PAY
See (B, E, P, S) on OVERTIME PAGE

HOLIDAY
Paid: See (5, 6, 8, 16, 23, 24, 25, 26) on HOLIDAY PAGE
Overtime: See (5, 6, 8, 16, 23, 24, 25, 26) on HOLIDAY PAGE

4-1049/Tree

Electrician Lineman 01/01/2017

JOB DESCRIPTION Electrician Lineman **DISTRICT** 4

ENTIRE COUNTIES
Nassau, Queens, Suffolk

WAGES
For Utility Distribution & Transmission Line Construction:

Per Hour:	07/01/2016	04/02/2017
Lineman/Splicer	$ 52.28	$ 53.85
Material Man	45.48	46.85
Heavy Equip. Operator	41.82	43.08
Groundman	31.37	32.31
Flagman	23.53	24.23

For Natural Gasline Construction:

Per Hour:	07/01/2016
Journeyman U.G.Mech.	$ 44.08

Four (4), ten (10) hour days may be worked at straight time during a week, Monday thru Thursday.

NOTE - In order to use the '4 Day/10 Hour Work schedule', as your normal schedule, you must submit an 'Employer Registration for Use of 4 Day/10 Hour Work Schedule,' form PW30R; and there must be a dispensation of hours in place on the project. If the PW30R is not submitted you may be liable for overtime payments for work over 8 hours per day.

SUPPLEMENTAL BENEFITS
Per Hour:
Utility Distribution & Transmission Line Construction:

	07/01/2016	04/02/2017
All Classifications	31.5% of Hourly Wage Paid + $ 11.70	32.0% of Hourly Wage Paid + $ 11.93

NOTE: "Hourly Wage Paid" shall include any and all premium(s) pay

Natural Gasline Construction:

Per Hour:	07/01/2016
Journeyman U.G.Mech.	26% of Hourly Wage Paid + $11.96

OVERTIME PAY
See (B, E, Q) on OVERTIME PAGE
OVERTIME for Natural Gas Mechanic:(B,G,P)

HOLIDAY
Paid: See (1) on HOLIDAY PAGE
Overtime: See (5, 6, 8, 16, 23, 25, 26) on HOLIDAY PAGE
Same as Above for Natural Gas Mechanic.

REGISTERED APPRENTICES
1000 hour Terms at the following Percentage of Journeyman's Wage.
(Lineman Only)

1st	2nd	3rd	4th	5th	6th	7th
60%	65%	70%	75%	80%	85%	90%

SUPPLEMENTAL BENEFIT:	07/01/2016	04/02/2017
All Terms	31% of Hourly Wage Paid + $11.70	31% of Hourly Wage Paid + $11.93

4-1049 Line/Gas

Elevator Constructor 01/01/2017

JOB DESCRIPTION Elevator Constructor **DISTRICT** 4

ENTIRE COUNTIES
Bronx, Kings, Nassau, New York, Queens, Richmond, Suffolk

PARTIAL COUNTIES
Rockland: Entire County except for the Township of Stony Point
Westchester: Entire County except for the Townships of Bedford, Lewisboro, Cortland, Mt. Kisco, North Salem, Pound Ridge, Somers and Yorktown.

WAGES
Per hour:

	07/01/2016	03/17/2017
Elevator Constructor	$ 60.96	$ 62.64
Modernization & Service/Repair	47.91	49.14

SUPPLEMENTAL BENEFITS
Per Hour:

Elevator Constructor	$ 36.86	$ 38.57

Modernization & Service/Repair	35.87	37.55

OVERTIME PAY
Constructor. See (D, M, T) on OVERTIME PAGE.

Modern./Service See (B, F, S) on OVERTIME PAGE.

HOLIDAY
Paid: See (5, 6, 8, 11, 15, 16, 25) on HOLIDAY PAGE
Overtime: See (5, 6, 8, 11, 15, 16, 25) on HOLIDAY PAGE

REGISTERED APPRENTICES
WAGES PER HOUR:
*Note:1st Term is based on Average wage of Constructor & Modernization.
Terms 2 thru 4 Based on Journeyman's wage of classification Working in.

1 YEAR TERMS:

1st Term*	2nd Term	3rd Term	4th Term
50%	55%	65%	75%

SUPPLEMENTAL BENEFITS

Elevator Constructor		
1st Term	$ 30.44	$ 31.96
2nd Term	31.27	32.82
3rd Term	32.51	34.10
4th Term	33.75	35.37
Modernization & Service/Repair		
1st Term	$ 30.37	$ 31.89
2nd Term	30.73	32.26
3rd Term	31.87	33.43
4th Term	33.02	34.61

4-1

Glazier 01/01/2017

JOB DESCRIPTION Glazier **DISTRICT** 8

ENTIRE COUNTIES
Bronx, Dutchess, Kings, Nassau, New York, Orange, Putnam, Queens, Richmond, Rockland, Suffolk, Sullivan, Ulster, Westchester

WAGES

Per hour:	07/01/2016	11/01/2016 + additional $.85
Glazier	$ 53.55	
Scaffolding	$ 54.55	

Scafolding includes swing scaffold, mechanical equipment, scissor jacks, man lifts, booms & buckets 24' or more, but not pipe scaffolding.

Repair & Maintenance $ 26.88

Repair & Maintenance- All repair & maintenance work on a particular building,whenever performed, where the total cumulative contract value is under $121,550

SUPPLEMENTAL BENEFITS

Per hour paid:	07/01/2016	11/01/2016
Journeyworker	$ 28.94	$ 28.94
Repair & Maintenance	17.26	17.26

OVERTIME PAY
OVERTIME: Premium is applied to the respective base wage only.
See (C*,D* E2, O) on OVERTIME PAGE.

* If an optional 8th hour is required to complete the entire project, the same shall be paid at the regular rate of pay. If a 9th hour is worked, then both hours or more (8th & 9th or more) will be paid at double time rate of pay.

For Repair & Maintenance see (B,B2, F, P) on overtime page.

HOLIDAY
Paid: See (1) on HOLIDAY PAGE
Overtime: See (4, 6, 16, 25) on HOLIDAY PAGE
Paid for the Repair & Maintenance (5, 6, 16 & 25)

REGISTERED APPRENTICES
Wage per hour:
(1) year terms at the following wage rates:

	07/01/2016	11/01/2016
1st term	$ 18.20	$ 18.20
2nd term	26.44	26.44
3rd term	31.89	31.89
4th term	42.69	42.69

Supplemental Benefits:
(Per hour worked)

1st term	$ 14.24	$ 14.24
2nd term	19.67	19.67
3rd term	21.58	21.58
4th term	25.12	25.12

8-1281 (DC9 NYC)

Insulator - Heat & Frost 01/01/2017

JOB DESCRIPTION Insulator - Heat & Frost **DISTRICT** 4

ENTIRE COUNTIES
Bronx, Kings, Nassau, New York, Queens, Richmond, Suffolk

WAGES

Per Hour:	07/01/2016	12/26/2016 Additional
Insulators Heat & Frost	$ 64.76	$1.20/Hr.

SUPPLEMENTAL BENEFITS
Per Hour:

Insulators Heat & Frost	$ 32.46

OVERTIME PAY
See (A, D, O, V) on OVERTIME PAGE

HOLIDAY
Paid: See (1) on HOLIDAY PAGE
Overtime: See (5, 6, 11, 15, 16, 25, 26) on HOLIDAY PAGE

REGISTERED APPRENTICES
Wages:
1 year terms at the following percentage of Journymans Wage.

1st	2nd	3rd	4th
40%	60%	70%	80%

Supplemental Benefits per hour:

Apprentice Insulator(s)

1st	$ 12.98
2nd	19.48
3rd	22.72
4th	25.97

4-12

Ironworker 01/01/2017

JOB DESCRIPTION Ironworker **DISTRICT** 4

ENTIRE COUNTIES
Bronx, Kings, Nassau, New York, Queens, Richmond, Suffolk, Westchester

PARTIAL COUNTIES
Rockland: Southern section - south of Convent Road and east of Blue Hills Road.

WAGES

Per hour:	07/01/2016
Reinforcing & Metal Lathing	$ 54.53

SUPPLEMENTAL BENEFITS
Per hour paid:

Reinforcing & Metal Lathing	$ 33.05

OVERTIME PAY
See (B, B1, Q) on OVERTIME PAGE

HOLIDAY
Paid: See (1) on HOLIDAY PAGE
Overtime: See (5, 6, 8, 11, 13, 18, 19, 25) on HOLIDAY PAGE

REGISTERED APPRENTICES
(1) year terms at the following wage rates:
Wages Per Hour:

1st term	2nd term	3rd term	4th Term
$ 26.63	$ 30.63	$ 33.63	$ 36.63

SUPPLEMENTAL BENIFITS
Per Hour:

1st term	2nd term	3rd term	4th Term
$ 11.09	$ 13.09	$ 17.05	$ 18.05

4-46Reinf

Ironworker 01/01/2017

JOB DESCRIPTION Ironworker **DISTRICT** 9

ENTIRE COUNTIES
Bronx, Kings, Nassau, New York, Queens, Richmond, Suffolk, Westchester

WAGES

Per Hour:	07/01/2016	01/01/2017
IRONWORKER:		
Ironworker Rigger	$ 58.34	An Additional $ 1.36
Ironworker Stone Derrickman	$ 58.34	$ 1.36

SUPPLEMENTAL BENEFITS
Ironworker: $ 38.85

OVERTIME PAY
See (B, D1, *E, Q, **V) on OVERTIME PAGE
*Time and one-half shall be paid for all work on Saturday up to eight (8) hours and double time shall be paid for all work thereafter.
** Benefits same premium as wages on Holidays only

HOLIDAY
Paid: See (1) on HOLIDAY PAGE
Overtime: See (5, 6, 8, 25) on HOLIDAY PAGE
*Work stops at schedule lunch break with full day's pay.

REGISTERED APPRENTICES
Wage per hour:

1/2 year terms at the following hourly wage rate:

	1st	2nd	3rd	4th	5th	6th
07/01/2016	$29.17	$29.17	$41.44	$46.07	$50.71	$50.71

Supplemental benefits:

Per hour paid:	$19.43	$19.43	$29.15	$29.15	$29.15	$29.15

9-197D/R

Ironworker 01/01/2017

JOB DESCRIPTION Ironworker **DISTRICT** 4

ENTIRE COUNTIES
Bronx, Kings, Nassau, New York, Queens, Richmond, Suffolk, Westchester

WAGES

Per hour:	07/01/2016	01/01/2017	07/01/2017
Ornamental	$ 43.65	$ 43.90	Additional
Chain Link Fence	43.65	43.90	$ 1.20/Hr.
Guide Rail Installation	43.65	43.90	To be allocated

SUPPLEMENTAL BENEFITS

Per hour paid:		
Journeyworker:	$ 50.16	$ 51.16

OVERTIME PAY
OVERTIME: See (A*,D1,E**,Q,V) on OVERTIME PAGE.

*Time and one-half shall be paid for all work in excess of seven (7) hours at the end of a work day to a maximum of two (2) hours on any regular work day (8th & 9th hours of work) and double time shall be paid for all work thereafter.
**Time and one-half shall be paid for all work on Saturday up to seven (7) hours and double time shall be paid for all work thereafter.

HOLIDAY
Paid: See (1) on HOLIDAY PAGE
Overtime: See (5, 6, 25) on HOLIDAY PAGE

REGISTERED APPRENTICES
1st term represents first 1-10 months, thereafter (1/2) year terms at the following percentage of Journeyman's wage.

1st	2nd	3rd	4th	5th
50%	55%	60%	70%	80%

Supplemental Benefits per hour paid:

1st Term	$ 38.49	$ 38.74
2nd Term	39.65	39.93
3rd Term	40.82	41.12
4th Term	43.16	43.51
5th Term	45.49	45.89

4-580-Or

Ironworker 01/01/2017

JOB DESCRIPTION Ironworker **DISTRICT** 4

ENTIRE COUNTIES
Bronx, Kings, Nassau, New York, Queens, Richmond, Suffolk, Westchester

WAGES
PER HOUR:

	07/01/2016	01/01/2017	07/01/2017
Ironworker:			Additional
Structural	$ 49.50	$ 49.75	$ 1.73/hr.
Bridges			to be allocated
Machinery			

SUPPLEMENTAL BENEFITS
PER HOUR:

Journeyman	$ 70.23	$ 71.60

OVERTIME PAY
See (B, B1, Q) on OVERTIME PAGE

HOLIDAY

Paid: See (1) on HOLIDAY PAGE
Overtime: See (5, 6, 18, 19) on HOLIDAY PAGE

REGISTERED APPRENTICES
WAGES PER HOUR:

6 month terms at the following rate:

1st	$ 25.85	$ 25.97
2nd	26.45	26.57
3rd - 6th	27.05	27.17

Supplemental Benefits
PER HOUR:

All Terms	48.84	49.76

4-40/361-Str

Laborer - Building 01/01/2017

JOB DESCRIPTION Laborer - Building **DISTRICT** 4

ENTIRE COUNTIES
Nassau, Suffolk

WAGES
WAGES
Per Hour:

	07/01/2016	07/01/2017
Building Laborer	$ 38.65	Additional $ 1.40/Hr
Asbestos Abatement Workers (Re-Roofing Removal see Roofer)	36.00	

SUPPLEMENTAL BENEFITS
Per Hour:

Building Laborer	$ 28.91
Asbestoes Abatment Worker	16.45

OVERTIME PAY
See (B, E, Q) on OVERTIME PAGE
See also(H)for Fire Watch on OVERTIME PAGE
Asbestos Worker See (B, H)

HOLIDAY
Paid: See (1) on HOLIDAY PAGE
Overtime: See (5, 6, 25) on HOLIDAY PAGE
Asbestos Worker see (5,6,8 & 28)

REGISTERED APPRENTICES
Regular Hours Work Terms

Term #1	1 hr to 1000hrs
Term #2	1001hrs to 2000hrs
Term #3	2001hrs to 3000hrs
Term #4	3001hrs to 4000hrs

Wages per hour:

1st Term	$ 17.40
2nd Term	20.35
3rd Term	24.83
4th Term	29.66

Benifits per hour

1st Term	$ 19.15
2nd Term	21.69
3rd Term	21.94
4th Term	21.94

4-66

Laborer - Heavy&Highway 01/01/2017

JOB DESCRIPTION Laborer - Heavy&Highway **DISTRICT** 4

ENTIRE COUNTIES
Nassau, Suffolk

WAGES
Laborer (Heavy/Highway):
GROUP # 1: Asphalt Rakers, Concrete Curb Formsetters.
GROUP # 2: Asphalt Shovelers, Roller Boys and Tampers.
GROUP # 3: Basic Laborer, Power Tool(Jackhammer), Landscape Construction, Traffic Control Personnel(flaggers)

WAGES PER HOUR:

	07/01/2016	06/01/2017
GROUP # 1		
Total Wage Paid	$ 48.32	Additional
"Base Wage"	42.37	$ 2.31
GROUP # 2		
Total Wage Paid	$ 47.08	Additional
"Base Wage"	41.13	$ 2.27
GROUP # 3		
Total Wage Paid	$ 43.30	Additional
"Base Wage"	37.35	$ 2.16

NOTE: "Base Wage" for Premium/Overtime calculation Only. $5.95 is differance between "Base" and "Total"

SUPPLEMENTAL BENEFITS
Per Hour:
ALL GROUPS $ 28.29

After Forty (40)paid hours in a work week
OVERTIME PAY $ 17.66

OVERTIME PAY
OVERTIME PAY
See (B, E2, F) on OVERTIME PAGE
NOTES: Premium/Overtime Pay to be calculated on "Base Wage" only"
Example Group# 3: $37.35 X Time and One Half = $56.02 + $5.95 = $61.97
Premium Pay of 30% of base wage for all Straight time hours on all New York State, D.O.T. and other Goverment Mandated Off-Shift Work.
Hazardous Material Work add an Additional 10% of base wage

HOLIDAY
HOLIDAY
Paid: See (1) on HOLIDAY PAGE
Overtime: See (1) on HOLIDAY PAGE

REGISTERED APPRENTICES
1000 hour(s) Terms at the following Pecentage of the Basic Wage except
4th Term calculate at Total Wage Paid.

1st 0-1000/Hrs.	60%
2nd 1001-2000/Hrs.	70%
3rd 2001-3000/Hrs.	80%
4th 3001-4000/Hrs.	90%

Supplemental Benefits per hour:

All APPRENTICES $ 28.29
After Forty(40) paid hours in a work Week
$ 17.66

4-1298

Mason **01/01/2017**

JOB DESCRIPTION Mason **DISTRICT** 4

ENTIRE COUNTIES
Bronx, Kings, Nassau, New York, Queens, Richmond, Suffolk

WAGES
Per Hour: 07/01/2016

Brick/Blocklayer $ 57.98

SUPPLEMENTAL BENEFITS
Per Hour:

Brick/Block Layer $ 26.80

OVERTIME PAY
See (A, E, E2, Q) on OVERTIME PAGE

HOLIDAY
Paid: See (1) on HOLIDAY PAGE
Overtime: See (5, 6, 25) on HOLIDAY PAGE

REGISTERED APPRENTICES
(800 hour) Terms at the following Percentage of Journeyworkers Wage:

1st	2nd	3rd	4th	5th
50%	60%	70%	80%	90%

Supplemental Benefits per hour:

All Apprentices $ 16.53

4-1Brk

Mason - Building 01/01/2017

JOB DESCRIPTION Mason - Building **DISTRICT** 9

ENTIRE COUNTIES
Nassau, Rockland, Suffolk, Westchester

WAGES
Per hour: 07/01/2016 12/05/2016

Building:		An Additional
Tile Finisher	$ 42.89	$ 0.82

SUPPLEMENTAL BENEFITS
Per Hour:

Journey worker $ 20.22* per hour paid
plus $ 8.42 per hour worked

OVERTIME PAY
See (B, E, Q, *V) on OVERTIME PAGE
* This portion of Supplemental benefits subject to same premium rate as shown for overtime wages.
Work beyond 10 hours on a Saturday shall be paid at double the hourly wage rate.

HOLIDAY
Paid: See (1) on HOLIDAY PAGE
Overtime: See (5, 6, 11, 15, 16, 25) on HOLIDAY PAGE

9-7/88A-tf

Mason - Building 01/01/2017

JOB DESCRIPTION Mason - Building **DISTRICT** 9

ENTIRE COUNTIES
Bronx, Kings, Nassau, New York, Queens, Richmond, Suffolk, Westchester

WAGES
Building:

Wages per hour:	07/01/2016	01/01/2017
Mosaic & Terrazzo Mechanic	$ 51.82	An additional $1.15
Mosaic & Terrazzo Finisher	50.21	An additional $1.15

SUPPLEMENTAL BENEFITS
Journeyworker:
Per hour:

Mosaic & Terrazzo Mechanic	$ 23.35* per hour paid plus $ 10.20 per hour worked
Mosaic & Terrazzo Finisher	$23.35* per hour paid plus $10.19 per hour worked

OVERTIME PAY
See (A, *E, Q) on OVERTIME PAGE

HOLIDAY
Paid: See (1) on HOLIDAY PAGE
Overtime: See (5, 6, 8, 11, 15, 16, 25) on HOLIDAY PAGE
Easter Sunday is an observed holiday.Holidays falling on a Saturday will be observed on that Saturday. Holidays falling on a Sunday will be celebrated on the Monday.

REGISTERED APPRENTICES
Wages per hour:
(750 Hour) terms at the following wage rate.

	1st	2nd	3rd	4th	5th	6th	7th	8th
07/01/2016	$ 25.91	$ 28.50	$ 31.09	$ 33.68	$ 36.27	$ 38.87	$ 44.05	$ 49.23

* 01/01/2017 Apprentices will receive an increase per the Journeyman's increase.

Supplemental benefits per hour:

07/01/2016	$ 11.68* plus $ 5.11**
	$ 12.84* plus $ 5.62**
	$ 14.01* plus $ 6.12**
	$ 15.18* plus $ 6.64**
	$ 16.35* plus $ 7.15**
	$ 17.51* plus $ 7.66**
	$ 19.85* plus $ 8.68**
	$ 22.18* plus $ 9.70**

* Per Hour paid and subject to same premium as overtime wages.
** Per hour worked

9-7/3

Mason - Building 01/01/2017

JOB DESCRIPTION Mason - Building **DISTRICT** 9

ENTIRE COUNTIES
Bronx, Kings, Nassau, New York, Queens, Richmond, Suffolk, Westchester

WAGES

Per hour:	07/01/2016	01/01/2017
Building-Marble Restoration:		
Marble, Stone & Terrazzo Polisher, etc	$ 40.04	$ 40.33

SUPPLEMENTAL BENEFITS
Per Hour Paid:
Journeyworker:

Building-Marble Restoration:		
Marble, Stone & Polisher	$ 24.92	$ 25.45

OVERTIME PAY
See (B, *E, Q, V) on OVERTIME PAGE
*ON SATURDAYS, 8TH HOUR AND SUCCESSIVE HOURS PAID AT DOUBLE HOURLY RATE.

HOLIDAY
Paid: See (1) on HOLIDAY PAGE
Overtime: See (5, 6, 8, 11, 15, 25) on HOLIDAY PAGE
1ST TERM APPRENTICE GETS PAID FOR ALL OBSERVED HOLIDAYS.

REGISTERED APPRENTICES
WAGES per hour:
(900 hour)terms at the following per cent of journeyman's wages:

	1st 0-900	2nd 901-1800	3rd 1801-2700	4th over 2700
07/01/2016	70%	80%	90%	100%

Supplemental Benefits Per Hour:

07/01/2016	$ 22.78	$ 23.50	$ 24.21	$ 24.92

9-7/24-MP

Mason - Building 01/01/2017

JOB DESCRIPTION Mason - Building **DISTRICT** 9

ENTIRE COUNTIES
Bronx, Dutchess, Kings, Nassau, New York, Orange, Putnam, Queens, Richmond, Rockland, Suffolk, Sullivan, Ulster, Westchester

WAGES

Wages:	07/01/2016	01/01/2017
Marble Cutters& Setters	$ 57.32	$ 57.74

SUPPLEMENTAL BENEFITS
Per Hour:

Journeyworker	$ 33.08	$ 34.11

OVERTIME PAY
See (B, E, Q, V) on OVERTIME PAGE

HOLIDAY
Paid: See (1) on HOLIDAY PAGE
Overtime: See (5, 6, 8, 11, 15, 16, 25) on HOLIDAY PAGE

REGISTERED APPRENTICES
Wage Per Hour:

750 hour terms at the following wage.

	1st 1-750	2nd 751-1500	3rd 1501-2250	4th 2251-3000	5th 3001-3750	6th 3751-4500	7th 4501-5250	8th 5251-6000	9th 6001-6751	10th 6751-7500
07/01/2016	$22.93	$25.79	$28.66	$31.53	$34.39	$37.26	$40.12	$42.99	$48.72	$54.45

01/01/2017: Apprentices will receive an increase per the journeyman's wage increase.

Supplemental Benefits per hour paid at the following term:

	1st	2nd	3rd	4th	5th	6th	7th	8th	9th	10th
07/01/2016	$23.52	$24.27	$25.08	$25.84	$26.60	$27.37	$28.13	$28.91	$30.43	$31.96

9-7/4

Mason - Building 01/01/2017

JOB DESCRIPTION Mason - Building **DISTRICT** 9

ENTIRE COUNTIES
Bronx, Kings, Nassau, New York, Queens, Richmond, Suffolk, Westchester

WAGES

Per hour:	07/01/2016	01/01/2017
Marble, Stone,etc.		
Maintenance Finishers:	$ 21.96	$ 22.18

Note 1: An additional $2.00 per hour for time spent grinding floor using "60 grit" and below.
Note 2: Flaming equipment operator shall be paid an additional $25.00 per day.

SUPPLEMENTAL BENEFITS
Per Hour:

Marble, Stone, etc		
Maintenance Finishers:	$ 12.65	$ 12.87

OVERTIME PAY
See (B, *E, Q, V) on OVERTIME PAGE
*Double hourly rate after 8 hours on Saturday

HOLIDAY
Paid: See (5, 6, 8, 11, 15, 25) on HOLIDAY PAGE
Overtime: See (5, 6, 8, 11, 15, 25) on HOLIDAY PAGE
1st term apprentice gets paid for all observed holidays.

REGISTERED APPRENTICES

WAGES per hour: (750 hour)terms at the following percentage of journeyman's wage rate:		07/01/2016
1st term	0-750	70%
2nd term	750-1500	74%
3rd trem	1501-2250	78%
4th term	2251-3000	82%
5th term	3001-3750	88%
6th term	3751-4500	96%

Supplemental Benefits:
Per hour paid

1st term	$ 12.55
2nd term	13.85
3rd term	13.93
4th term	13.98
5th term	14.07
6th term	14.19

9-7/24M-MF

Mason - Building 01/01/2017

JOB DESCRIPTION Mason - Building **DISTRICT** 9

ENTIRE COUNTIES
Nassau, Rockland, Suffolk, Westchester

WAGES

Per hour:	07/01/2016	12/05/2016 Additional
Building:		
Tile Setters	$ 55.38	$ 1.13

SUPPLEMENTAL BENEFITS
Per Hour:

Journey Worker	$23.34* per hour paid Plus $8.57 per hour worked

OVERTIME PAY
See (B, E, Q, V) on OVERTIME PAGE
* This portion of benefits subject to same premium rate as shown for overtime wages.
Work beyond 10 hours on Saturday shall be paid at double the hourly wage rate.

HOLIDAY
Paid: See (1) on HOLIDAY PAGE
Overtime: See (5, 6, 11, 15, 16, 25) on HOLIDAY PAGE

REGISTERED APPRENTICES
Wage per hour:

Tile Setters:
(750 hour) term at the following wage rate:

Term: 1st 1-750	2nd 751-1500	3rd 1501-2250	4th 2251-3000	5th 3001-3750	6th 3751-4500	7th 4501-5250	8th 5251 6000
$28.49	$31.86	$35.62	$39.40	$42.97	$46.35	$49.46	$53.11

Supplemental Benefits per hour:

1st term	$14.95* plus $0.74	6th term	$18.35* plus $1.56
2nd term	$15.95* plus $0.79	7th term	$15.60* plus $5.61
3rd term	$16.25* plus $1.14	8th term	$20.35* plus $6.05
4th term	$16.85* plus $1.18		
5th term	$17.35* plus $1.52		

9-7/52A

Mason - Building / Heavy&Highway 01/01/2017

JOB DESCRIPTION Mason - Building / Heavy&Highway **DISTRICT** 4

ENTIRE COUNTIES
Bronx, Kings, Nassau, New York, Queens, Richmond, Suffolk

WAGES
WAGES

NOTE: Shall include but not limited to Precast concrete slabs (London Walks)Marble and Granite pavers 2'x 2' or larger.
Per Hour:

	07/01/2016
Stone Setter	$ 63.38
Stone Tender	$ 41.11

SUPPLEMENTAL BENEFITS
Per Hour:

Stone Setter	$ 29.10
Stone Tender	$ 18.37

OVERTIME PAY
See (*C, **E, Q) on OVERTIME PAGE
* On weekdays the eighth (8th) and ninth (9th) hours are time and one-half all work thereafter is paid at double the hourly rate.
** The first nine (9) hours on Saturday is paid at time and one-half all work thereafter is paid at double the hourly rate.

HOLIDAY
Paid: See (*18) on HOLIDAY PAGE
Overtime: See (5, 6, 10) on HOLIDAY PAGE
Paid: *Must work first 1/2.

REGISTERED APPRENTICES
Per Hour:

Stone Setter(800 hour) terms at the following Percentage of Stone Setters wage rate per hour:

1st	2nd	3rd	4th	5th	6th

50%	60%	70%	80%	90%	100%

Supplemental Benefits:
All Apprentices $ 18.81

4-1Stn

Mason - Building / Heavy&Highway 01/01/2017

JOB DESCRIPTION Mason - Building / Heavy&Highway **DISTRICT** 9

ENTIRE COUNTIES
Bronx, Kings, Nassau, New York, Queens, Richmond, Suffolk, Westchester

WAGES

Per hour:	07/01/2016	01/01/2017
Marble-Finisher	$ 45.66	$ 1.08

SUPPLEMENTAL BENEFITS
Journeyworker:
per hour paid

Marble- Finisher	$ 31.80

OVERTIME PAY
See (B, E, Q, V) on OVERTIME PAGE

HOLIDAY
Overtime: See (5, 6, 8, 11, 15, 16, 25) on HOLIDAY PAGE
* Work beyond 8 hours on a Saturday shall be paid at double the rate.
** When an observed holiday falls on a Sunday, it will be observed the next day.

9-7/20-MF

Mason - Building / Heavy&Highway 01/01/2017

JOB DESCRIPTION Mason - Building / Heavy&Highway **DISTRICT** 4

ENTIRE COUNTIES
Bronx, Kings, Nassau, New York, Queens, Richmond, Suffolk

WAGES

Per Hour:	07/01/2016
Cement Mason	$ 47.72

Four (4), ten (10) hour days may be worked at straight time during a week, Monday thru Friday. Any make-up day must be paid at the premium rate.

NOTE - In order to use the '4 Day/10 Hour Work schedule', as your normal schedule, you must submit an 'Employer Registration for Use of 4 Day/10 Hour Work Schedule,' form PW30R; and there must be a dispensation of hours in place on the project. If the PW30R is not submitted you may be liable for overtime payments for work over 8 hours per day.

SUPPLEMENTAL BENEFITS
Per Hour:

Cement Mason	$ 31.96
Overtime Rate	$ 39.70

OVERTIME PAY
See (*B1, E2, **Q, ***V) on OVERTIME PAGE
* Applies to 9th and 10th hours on Saturday
** "Holidays" only for Building Construction
*** Overtime Rate as Indicated

HOLIDAY
Paid: See (1) on HOLIDAY PAGE
Overtime: See (5, 6, 8, 11, 13, 25) on HOLIDAY PAGE

REGISTERED APPRENTICES
(1) year terms at the following Percentage of Journeyworkers Wage.

1st Term	50%
2nd Term	60%
3rd Term	70%

Supplement Benefits per hour paid:

1st Term	$ 15.98/OT Rate $ 19.85
2nd Term	$ 19.18/OT Rate $ 23.82
3rd Term	$ 22.37/OT Rate $ 27.79

4-780

Mason - Heavy&Highway 01/01/2017

JOB DESCRIPTION Mason - Heavy&Highway **DISTRICT** 4

ENTIRE COUNTIES
Bronx, Kings, Nassau, New York, Queens, Richmond, Suffolk

WAGES
Per Hour: 07/01/2016

Pointer, Caulkers & Cleaners $ 50.04

SUPPLEMENTAL BENEFITS
Per Hour:

Pointer, Cleaners & Caulkers $ 26.35

OVERTIME PAY
See (B, E2, H) on OVERTIME PAGE

HOLIDAY
Paid: See (1) on HOLIDAY PAGE
Overtime: See (5, 6, 25, 26) on HOLIDAY PAGE

REGISTERED APPRENTICES
Wages per hour:

One (1) year terms at the following wage rates.

1st	2nd	3rd	4th
$ 26.52	$ 27.89	$ 33.98	$ 40.80

Apprentices Supplemental Benefits:
(per hour paid)

$ 12.10	$ 16.00	$ 18.75	$ 19.60

4-1PCC

Operating Engineer - Building 01/01/2017

JOB DESCRIPTION Operating Engineer - Building **DISTRICT** 4

ENTIRE COUNTIES
Nassau, Suffolk

WAGES
BUILDING CATEGORIES:

CLASS " AA "CRANES:
Crane, Truck Crane, Derrick, Dragline, Dredge, Crawler Crane, Tower Crane & Pile Driver.

CLASS "A":
Asphalt Spreader, Backhoe Crawler/Hydraulic Excavator (360 upto & over 150,000lbs), Boiler, Boring Machine, Cherry Picker (over 70 tons), Concrete Pump, Gradall, Grader, Hoist, Loading Machine (10 yds. or more), Milling Machine, Power Winch-Stone Setting/Structural Steel & Truck Mounted, Powerhouse, Road Paver, Scoop-Carryall-Scraper in Tandem, Steam Shovel, Sideboom Tractor, Stone Spreader (selfpropelled), Tank Work, Tower Crane Engineer.

CLASS "B":
Backhoe (other than 360), Belt Screte, Boom Truck, Bulldozer, Boring Machine/Auger, Cherry Picker(under 70 Tons), Conveyor-Multi, Dinkey Locomotive, Fork Lift, Hoist (2 Drum), Loading Machine & Front Loader, Mulch Machine(Machine Fed), Power Wincher (Not Included in Class "A"), Asphalt Roller, Hydraulic Pump with Boring Machine, Scoop, Carryall/Scaper, Skid Loader/Skid Steer, Maintenance Man on Tower Crane,Trenching Machine, Vermeer Cutter, Work Boat, Inspection/Safety Boat.

CLASS "C":

Concrete Saw/Cutter/Breaker, Curb Machine(asphalt & Concrete), Maintenance Engineer (Small Equip. & Well Point), Field Mechanic, Milling Machine (Small), Pulvi Mixer, Pumps(all), Roller(dirt), Vac-All(Truck), Jet Pump(Truck), Interior Hoist, Concrete Finish Machine, Concrete Spreader, Hoist (one drum).

CLASS "D":
Breaker, Conveyer, Curing Machine, Fork Lift or Walk Behind (power operated), Generator, Hydra Hammer, Compactors (mechanical or hand operated), Pin Puller, Portable Heaters, Power Booms, Power Buggies, Pump (double action diaphragm), Ridge Cutter, Robotic Unit Operator, Shot Blaster.

CLASS "E":
Batching Plant, Generator, Grinder, Mixer, Mulching Machine, Oiler, Pump(gypsum), Pump (single action diaphragm), Stump Chipper, Track Tamper, Tractor(caterpiller or wheel), Vibrator, Deckhand on Work Boat, Inspection/Safety Boat, Trenching Machine (Hand).

	07/01/2016	06/01/2017
		Additional
Class "AA"	$ 72.62	$ 3.03/Hr
Cranes: Boom length over 100 feet add $ 1.00 per hour		
" " " 150 " " $ 1.50 " "		
" " " 250 " " $ 2.00 " "		
" " " 350 " " $ 3.00 " "		
		Additional
Class "A"	$ 60.43	$ 2.80/Hr
Add $3.50 for Hazardous Waste Work		
Class "B"	$ 57.35	$ 2.68/Hr
Add $2.50 for Hazardous Waste Work		
Class "C"	$ 55.29	$ 2.62/Hr
Add $1.50 for Hazardous Waste Work		
Class "D"	$ 46.28	$ 0.00
Add $1.00 for Hazardous Waste Work		
Class "E"	$ 44.33	$ 0.00

SUPPLEMENTAL BENEFITS
Per Hour:

All Classes	$ 34.65
Overtime Rate	26.35

OVERTIME PAY
See (D, O) on OVERTIME PAGE

HOLIDAY
Paid: See (5, 6, 15, 16, 25) on HOLIDAY PAGE
Overtime: See (5, 6, 15, 16, 25) on HOLIDAY PAGE
"NOTE" Employee must be Employed day before
and day after Holiday to recieve Holiday Pay.

REGISTERED APPRENTICES
One(1) Year Terms at the following Rate:

1st Term	$ 20.84
2nd Term	21.67
3rd Term	22.33

Supplemental Benefits per hour:

All Apprentices	$ 15.64
Overtime Rate	5.60

4-138

Operating Engineer - Building / Heavy&Highway 01/01/2017

JOB DESCRIPTION Operating Engineer - Building / Heavy&Highway **DISTRICT** 4

ENTIRE COUNTIES
Nassau, Suffolk

WAGES
Per Hour: 07/01/2016 08/01/2016

Well Driller	$ 35.19	$ 35.75
Well Driller Helper	$ 30.80	$ 31.22

Hazardous Waste Differential
Added to Hourly Wage:

Level A	$ 3.00
Level B	2.00
Level C	1.00

Monitoring Well Work
Add to Hourly Wage:

Level A	$ 3.00
Level B	2.00

SUPPLEMENTAL BENEFITS

Per Hour:	07/01/2016
Well Driller & Helper	$ 10% of straight time rate plus $ 10.90

Additional $ 3.50 for Premium Time

OVERTIME PAY
See (B, E, G, P) on OVERTIME PAGE

HOLIDAY

Paid:	See (5, 6, 16, 23) on HOLIDAY PAGE
Overtime:	See (5, 6, 16, 23) on HOLIDAY PAGE

REGISTERED APPRENTICES
Apprentices at 12 Month Terms

Wages Per Hour:	07/01/2015
1st Term	$ 20.84
2nd Term	$ 21.67
3rd Term	$ 22.33

SUPPLEMENTAL BENIFITS
Per Hour:

1st Term	10% of Wage + $ 5.10
2nd Term	10% of Wage + $ 5.60
3rd Term	10% of Wage + $ 6.60

BENEFITS AT PREMIUM TIME
Per Hour:

1st Term	10% of Wage + $ 5.85
2nd Term	10% of Wage + $ 6.60
3rd Term	10% of Wage + $ 8.10

4-138well

Operating Engineer - Heavy&Highway 01/01/2017

JOB DESCRIPTION Operating Engineer - Heavy&Highway **DISTRICT** 4

ENTIRE COUNTIES
Nassau, Suffolk

WAGES
Party Chief - One who directs a survey party
Instrument Man - One who runs the instrument and assists Party Chief
Rodman - One who holds the rod and in general, assists the survey party
Categories cover GPS & Under Ground Surveying

Per Hour: Heavy Highway/Building	07/01/2016	07/01/2017 Additional
Party Chief	$ 65.67	$ 2.73

Instrument Man	50.00	2.30
Rodman	42.84	2.10

SUPPLEMENTAL BENEFITS
Per Hour:

Heavy Highway/Building	$ 33.59

Premium*:

Heavy Highway/Building	$ 50.38

Premium**:

Heavy Highway/Building	$ 67.18

* Applies to instances where 1-1/2 regular rate are paid
**Applies to instances where 2 times the rate are paid.

OVERTIME PAY
See (B, *E, Q) on OVERTIME PAGE
* Doubletime paid on the 9th hour on Saturday.

HOLIDAY
Paid: See (5, 6, 8, 11, 12, 15, 25) on HOLIDAY PAGE
Overtime: See (5, 6, 8, 11, 12, 15, 25) on HOLIDAY PAGE

4-15D-N/S co.

Operating Engineer - Heavy&Highway 01/01/2017

JOB DESCRIPTION Operating Engineer - Heavy&Highway **DISTRICT** 4

ENTIRE COUNTIES
Nassau, Suffolk

WAGES
HEAVY/HIGHWAY CATEGORIES:

CLASS "AA" CRANES:
Crane, Truck Crane, Derrick, Dragline, Dredge, Crawler Crane, Tower Crane, Pile Driver.

CLASS "A":
Asphalt Spreader, Backhoe Crawler/Hydraulic Excavator (360 up to & over 150,000lbs), Barrier Machine, Cherrypicker (over 70 tons), Concrete Pump, Grader, Gradall, Hoist, Loading Machine (bucket 10 yds. or more), Laser Screed, Milling Machine (Large), Power Winch-Stone Setting/Structural Steel or Truck Mounted, Powerhouse, Road Paver, Scoop-Carryall-Scaper in Tandem, Side Boom Tractor, Stone Spreader(self propelled), Striping Machine (long line/truck mounted), Tree Graple, Tank Work, Track Alignment Machine.

CLASS "B":
Backhoe (other than 360), Boom Truck, Bulldozer, Boring Machine/Auger, Cherry Picker (under 70 tons), Conveyor-Multi, Post Hole-Auger, Fork Lift, Hoist (2 drum), Loading Machine & Front Loader, Mulch Machine (machine fed), Power Wincher (all others not included in class A), Asphalt Roller, Hydraulic Pump with Boring Machine, Scoop, Carryall/Scraper, Skid Loader/Skid Steer, Maintenance Man on Tower Crane, Trenching Machine, Vermeer Cutter, Work Boat, Inspection/Safety Boat.

CLASS "C":
Concrete Saw/Cutter/Breaker, Curb Machine (Asphalt & Concrete), Maintenance Engineer (Small Equip. & Well Point), Field Mechanic, Milling Machine (Small), Pulvi Mixer, Pumps (Hydralic & 4in or over), Roller (Dirt), Vac-All (Truck), Jet Pump (Truck),Power Winch (Truck Mounted), Compressor (Structural Steel & 2 or more Batteries), Concrete Finish Machine, Concrete Spreader, Fireman, Hoist (One Drum), Welding Machine (Structural Steel & Pile Work).

CLASS "D":
Compressor (Pile,Crane,Stone Setting), Concrete Saw Cutter/ Breaker, Work Lift (Walk Behind,Power Operated), Generator (Pile Work), Hydra Hammer, Hand Operated Compactor, Pin Puller, Portable Heater, Powered Broom/Buggy/Grinder, Pump (Single) Action (1 to 3 Inches/Gypsum/Double Action Diaphragm), Welding Machine, Robotic Units, Hand Line Striper, Boiler (Thermoplastic), Ridge Cutter, Shot Blaster, Conveyor, Curing Machine.

CLASS "E":
Batching Plant (On Job Site), Compressor, Generator, Grinder, Mixer, Mulching Machine (Hand Feed), Oiler, Pumps (Single action up to 3 In.), Root Cutter, Stump Chipper, Oiler on Tower Crane, Trenching Machine (Hand,walk behind), Track Tamper, Tractor, Vibrator, Deckhand on Work Boat, Inspection/Safety Boat.

07/01/2016	06/01/2017
	Additional

Class "AA"	$ 71.93	$3.03

Cranes: Boom Length over 100 feet add $ 1.00 per hour
" " " 150 " " $ 1.50 " "
" " " 250 " " $ 2.00 " "
" " " 350 " " $ 3.00 " "

		Additional
Class "A"	$ 63.70*	$ 2.80
*Add $3.50 for Hazardous Waste Work.		
Class "B"	$ 59.54*	$ 2.68
*Add $2.50 for Hazardous Waste Work.		
Class "C"	$ 57.43*	$ 2.62
*Add $1.50 for Hazardous Waste Work		
Class "D"	$ 48.18	$ 0.00
*Add $1.00 for Hazardous Waste Work		
Class "E"	$ 46.22	$ 0.00

"NOTE": ADD 30% to straight time hourly wage for NEW YORK STATE D.O.T. and other GOVERNMENTAL MANDATED off-shift work.

SUPPLEMENTAL BENEFITS
Per Hour:

ALL CLASSES	$ 34.90
Note: OVERTIME AMOUNT	$ 26.35

OVERTIME PAY
See (D, O) on OVERTIME PAGE

HOLIDAY
Paid: See (5, 6, 7, 8) on HOLIDAY PAGE
Overtime: See (5, 6, 7, 8) on HOLIDAY PAGE
"Note" Employee must be employed day before and day after a holiday to receive holiday pay.

REGISTERED APPRENTICES
Wage per hour:
REGISTERED APPRENTICES
One(1) Year Terms at the following Rate:

1st Term	$ 20.84
2nd Term	21.67
3rd Term	22.33

SUPPLEMENTAL BENEFITS:

APPRENTICES	$ 15.64
Note: Overtime Amount	$ 5.60

4-138

Operating Engineer - Marine Dredging 01/01/2017

JOB DESCRIPTION Operating Engineer - Marine Dredging **DISTRICT** 4

ENTIRE COUNTIES
Albany, Bronx, Cayuga, Chautauqua, Clinton, Columbia, Dutchess, Erie, Essex, Franklin, Greene, Jefferson, Kings, Monroe, Nassau, New York, Niagara, Orange, Orleans, Oswego, Putnam, Queens, Rensselaer, Richmond, Rockland, St. Lawrence, Suffolk, Ulster, Washington, Wayne, Westchester

WAGES
These wages do not apply to Operating Engineers on land based construction projects. For those projects, please see the Operating Engineer Heavy/Highway Rates. The wage rates below for barge mounted cranes and other equipment are only for marine dredging work in navigable waters found in the counties listed above.

Per Hour:

DREDGING OPERATIONS	07/01/2016
CLASS A	
Operator, Leverman,	$ 35.63

Lead Dredgeman

CLASS A1 Dozer,Front Loader Operator	To conform to Operating Engineer Prevailing Wage in locality where work is being performed including benefits.
CLASS B Spider/Spill Barge Operator, Tug Operator(over1000hp), OperatorII, Fill Placer, Derrick Operator, Engineer, Chief Mate, Electrician, Chief Welder, Maintenance Engineer	$ 30.81
Certified Welder, Boat Operator(licensed)	$ 29.01
CLASS C Drag Barge Operator, Steward, Mate, Assistant Fill Placer,	$ 28.22
Welder (please add)$ 0.06	
Boat Operator	$ 27.30
CLASS D Shoreman, Deckhand, Rodman, Scowman, Cook, Messman, Porter/Janitor	$ 22.68
Oiler(please add)$ 0.09	

SUPPLEMENTAL BENEFITS
Per Hour:
THE FOLLOWING SUPPLEMENTAL BENEFITS APPLY TO ALL CATEGORIES

	07/01/2016
All Classes A & B	$ 9.99 plus 8% of straight time wage, Overtime hours add $ 0.63
All Class C	$ 9.69 plus 8% of straight time wage, Overtime hours add $ 0.48
All Class D	$ 9.39 plus 8% of straight time wage, Overtime hours add $ 0.33

OVERTIME PAY
See (B, F, R) on OVERTIME PAGE

HOLIDAY
Paid: See (1) on HOLIDAY PAGE
Overtime: See (5, 6, 8, 15, 26) on HOLIDAY PAGE

4-25a-MarDredge

Operating Engineer - Survey Crew - Consulting Engineer 01/01/2017

JOB DESCRIPTION Operating Engineer - Survey Crew - Consulting Engineer **DISTRICT** 9

ENTIRE COUNTIES
Bronx, Kings, Nassau, New York, Putnam, Queens, Richmond, Suffolk, Westchester

PARTIAL COUNTIES
Dutchess: That part in Duchess County lying South of the North City line of Poughkeepsie.

WAGES
Feasibility and preliminary design surveying, any line and grade surveying for inspection or supervision of construction.

Per hour:	07/01/2016
Survey Classifications	
Party Chief	$ 38.18
Instrument Man	31.47
Rodman	27.24

SUPPLEMENTAL BENEFITS
Per Hour:

All Crew Members:	$ 20.20

OVERTIME PAY
OVERTIME:.... See (B, E*, Q, V) ON OVERTIME PAGE.
*Doubletime paid on the 9th hour on Saturday.

HOLIDAY
Paid: See (5, 6, 7, 11, 16) on HOLIDAY PAGE
Overtime: See (5, 6, 7, 11, 16) on HOLIDAY PAGE

9-15dconsult

Operating Engineer - Trenchless Pipe Rehab 01/01/2017

JOB DESCRIPTION Operating Engineer - Trenchless Pipe Rehab **DISTRICT** 4

ENTIRE COUNTIES
Nassau, Suffolk

WAGES

IMPORTANT NOTE: This Category & Classifications are now located in Operating Engineers/Heavy Highway & Laborers/ Heavy Highway.

Per Hour:

	07/01/2016 (SEE)
Robotic Unit Operator	Operator(class D)
Technician/Boiler, Generator	Operator(classes C&D)
AM Liner/Hydra Seal	Laborer(Grp#3)
Hobas Pipe, Polyethyene Pipe or Pull and Inflate Liner	Laborer(Grp#3)

OVERTIME PAY

HOLIDAY

4-138TrchPReh

Painter 01/01/2017

JOB DESCRIPTION Painter **DISTRICT** 8

ENTIRE COUNTIES
Bronx, Kings, Nassau, New York, Putnam, Queens, Richmond, Suffolk, Westchester

WAGES

Per hour:	07/01/2016
Brush	$ 46.85
Abatement/Removal of lead based or lead containing paint on materials to be repainted.	46.85

Spray & Scaffold	49.85
Fire Escape	49.85
Decorator	49.85
Paperhanger/Wall Coverer	48.72

SUPPLEMENTAL BENEFITS

Per hour worked:	07/01/2016
Paperhanger	$ 25.79
All others	22.47
Premium*	24.97*

*Applies only to "All others" catergory,not paperhanger journeyman.

OVERTIME PAY
See (A, H) on OVERTIME PAGE

HOLIDAY
Paid: See (1) on HOLIDAY PAGE
Overtime: See (5, 6, 16, 25) on HOLIDAY PAGE

REGISTERED APPRENTICES
Indentured after 5/31/93 (1) year terms at the following wage rate.
(per hour)

	07/01/2016
Appr 1st term...	$ 17.85
Appr 2nd term...	23.26
Appr 3rd term...	28.14
Appr 4th term...	37.52

Supplemental benefits:
(per Hour worked)

Appr 1st term...	$ 11.73
Appr 2nd term...	14.42
Appr 3rd term...	16.70
Appr 4th term...	21.20

8-NYDC9-B/S

Painter 01/01/2017

JOB DESCRIPTION Painter **DISTRICT** 8

ENTIRE COUNTIES
Putnam, Suffolk, Westchester

PARTIAL COUNTIES
Nassau: All of Nassau except the areas described below: Atlantic Beach, Ceaderhurst, East Rockaway, Gibson, Hewlett, Hewlett Bay, Hewlett Neck, Hewlett Park, Inwood, Lawrence, Lido Beach, Long Beach, parts of Lynbrook, parts of Oceanside, parts of Valley Stream, and Woodmere. Starting on the South side of Sunrise Hwy in Valley Stream running east to Windsor and Rockaway Ave., Rockville Centre is the boundary line up to Lawson Blvd. turn right going west all the above territory. Starting at Union Turnpike and Lakeville Rd. going north to Northern Blvd. the west side of Lakeville road to Northern blvd. At Northern blvd. going east the district north of Northern blvd. to Port Washington Blvd. West of Port Washington blvd.to St.Francis Hospital then north of first traffic light to Port Washington and Sands Point, Manor HAven, Harbour Acres.

WAGES

Per hour:	07/01/2016
Drywall Taper	$ 46.85

SUPPLEMENTAL BENEFITS

Per hour worked:	07/01/2016
Journeyman	$ 22.47

OVERTIME PAY
See (A, H) on OVERTIME PAGE

HOLIDAY
Paid: See (1) on HOLIDAY PAGE
Overtime: See (5, 6, 16, 25) on HOLIDAY PAGE

REGISTERED APPRENTICES

Wages(per Hour)	07/01/2016

1500 hour terms at the following wage rate:

1st term	$ 17.85
2nd term	$ 23.26
3rd term	$ 28.14
4th term	$ 37.52

Suppemental Benefits per hour:
One year term (1500 hours)at the following dollar amount.

1st year	$ 11.73
2nd year	$ 14.42
3rd year	$ 16.70
4th year	$ 21.20

8-NYDCT9-DWT

Painter - Bridge & Structural Steel 01/01/2017

JOB DESCRIPTION Painter - Bridge & Structural Steel **DISTRICT** 8

ENTIRE COUNTIES
Albany, Bronx, Clinton, Columbia, Dutchess, Essex, Franklin, Fulton, Greene, Hamilton, Kings, Montgomery, Nassau, New York, Orange, Putnam, Queens, Rensselaer, Richmond, Rockland, Saratoga, Schenectady, Schoharie, Suffolk, Sullivan, Ulster, Warren, Washington, Westchester

WAGES
Per Hour Worked:
STEEL:

Bridge Painting:	07/01/2016
From May 1st to Nov. 15th -	
	$ 49.00
	+ 6.13*
From Nov. 16th to April 30th -	
	$ 49.00
	+ 6.13*

*Not subject to overtime and limited to first 40 hours
NOTE: All premium wages are to be calculated on $48.00 or $49.00 per hour only.

EXCEPTION: During the period of May 1st to November 15th, for the first and last week of employment on the project, and for the weeks of Memorial Day, Independence Day and Labor Day, this rate shall be paid for the actual number of hours worked.

Power Tool/Spray is an additional $6.00 per hour above hourly rate, whether straight time or overtime

NOTE: Generally, for Bridge Painting Contracts, ALL WORKERS on and off the bridge (including Flagmen) are to be paid Painter's Rate; the contract must be ONLY for Bridge Painting.

SUPPLEMENTAL BENEFITS
Per Hour Worked:

Journeyworker:	07/01/2016
From May 1st to Nov. 15th -	
Hourly Rate up to 40 hours	$ 29.95
Hourly Rate after 40 hours	7.50
From Nov. 16th to April 30th -	
Hourly Rate up to 50 hours	29.70
Hourly Rate after 50 hours	7.50

EXCEPTION: During the period of May 1st to November 15th, for the first and last week of employment on the project, and for the weeks of Memorial Day, Independence Day and Labor Day, this rate shall be paid for the actual number of hours worked.

OVERTIME PAY
See (A, F, R) on OVERTIME PAGE

HOLIDAY
Paid: See (1) on HOLIDAY PAGE
Overtime: See (4, 6) on HOLIDAY PAGE

REGISTERED APPRENTICES
(Wage per hour Worked):

Apprentices: (1) year terms

	07/01/2016
1st 90 days	$ 22.05
1st year after 90 days	22.05
2nd year	33.08
3rd year	44.10

Supplemental Benefits per hour worked:

	07/01/2016
1st 90 days	$ 9.23
1st year after 90 days	11.98
2nd year	17.97
3rd year	23.96

8-DC-9/806/155-BrSS

Painter - Line Striping 01/01/2017

JOB DESCRIPTION Painter - Line Striping **DISTRICT** 8

ENTIRE COUNTIES
Albany, Bronx, Clinton, Columbia, Dutchess, Essex, Franklin, Fulton, Greene, Hamilton, Kings, Montgomery, Nassau, New York, Orange, Putnam, Queens, Rensselaer, Richmond, Rockland, Saratoga, Schenectady, Schoharie, Suffolk, Sullivan, Ulster, Warren, Washington, Westchester

WAGES
Per hour:

Painter (Striping-Highway):	07/01/2016
Striping-Machine Operator*	$ 27.11
Linerman Thermoplastic	$ 32.37

Note: * Includes but is not limited to: Positioning of cones and directing of traffic using hand held devices. Excludes the Driver/Operator of equipment used in the maintenance and protection of traffic safety

Four (4), ten (10) hour days may be worked at straight time during a week, Monday thru Thursday. Friday may be used as a make-up day.

NOTE - In order to use the '4 Day/10 Hour Work Schedule,' as your normal schedule, you must submit an 'Employer Registration for Use of 4 Day/10 Hour Work Schedule,' form PW30R; and there must be a dispensation of hours in place on the project. If the PW30R is not submitted you may be liable for overtime payments for work over 8 hours per day.

SUPPLEMENTAL BENEFITS
Per hour paid: 07/01/2016
Journeyworker:

Striping-Machine operator	$ 14.18
Linerman Thermoplastic	$ 14.55

OVERTIME PAY
See (B, E, E2, F, S) on OVERTIME PAGE

HOLIDAY
Paid: See (5, 20) on HOLIDAY PAGE
Overtime: See (5, 8, 11, 12, 15, 16, 17, 20, 21, 22) on HOLIDAY PAGE

8-1456-LS

Painter - Metal Polisher 01/01/2017

JOB DESCRIPTION Painter - Metal Polisher **DISTRICT** 8

ENTIRE COUNTIES
Albany, Allegany, Bronx, Broome, Cattaraugus, Cayuga, Chautauqua, Chemung, Chenango, Clinton, Columbia, Cortland, Delaware, Dutchess, Erie, Essex, Franklin, Fulton, Genesee, Greene, Hamilton, Herkimer, Jefferson, Kings, Lewis, Livingston, Madison, Monroe, Montgomery, Nassau, New York, Niagara, Oneida, Onondaga, Ontario, Orange, Orleans, Oswego, Otsego, Putnam, Queens, Rensselaer, Richmond, Rockland, Saratoga, Schenectady, Schoharie, Schuyler, Seneca, St. Lawrence, Steuben, Suffolk, Sullivan, Tioga, Tompkins, Ulster, Warren, Washington, Wayne, Westchester, Wyoming, Yates

WAGES

	07/01/2016	06/01/2017

Metal Polisher	$ 28.88	$ 29.73
Metal Polisher**	29.83	30.68
Metal Poilsher***	32.38	33.23

**Note: Applies on New Construction & complete renovation
*** Note: Applies when working on scaffolds over 34 feet.

SUPPLEMENTAL BENEFITS

Per Hour:	07/01/2016	06/01/2017
Journeyworker:		
All classification	$ 9.26	$ 9.41

OVERTIME PAY
See (B, E, E2, P, T) on OVERTIME PAGE

HOLIDAY
Paid: See (5, 6, 11, 15, 16, 25, 26) on HOLIDAY PAGE
Overtime: See (5, 6, 9, 11, 15, 16, 25, 26) on HOLIDAY PAGE

REGISTERED APPRENTICES
Wages per hour:
One (1) year term at the following wage rates:

	07/01/2016
1st year	$ 11.75
2nd year	13.00
3rd year	15.75

Supplentals benefits:
Per hour paid:

1st year	$ 6.26
2nd year	6.37
3rd year	6.51

8-8A/28A-MP

Plumber 01/01/2017

JOB DESCRIPTION Plumber **DISTRICT** 4

ENTIRE COUNTIES
Nassau, Suffolk

WAGES

Per Hour:	07/01/2016	05/10/2017
Plumber/		
PUMP & TANK	$ 43.99	$ 44.24

SUPPLEMENTAL BENEFITS
Per Hour:

Plumber	$ 24.23	$ 25.23

OVERTIME PAY
See (B, Q, *V) on OVERTIME PAGE
(V) For Sundays & Holidays if Worked Only

HOLIDAY
Paid: See (1) on HOLIDAY PAGE
Overtime: See (5, 6, 16, 25) on HOLIDAY PAGE

REGISTERED APPRENTICES
One(1) Year Terms at the Following
Percentage of Journeymans wage:

1st Term	30%
2nd Term	40%
3rd Term	50%
4th Term	60%

5th Term	70%
6th Term	85%

Supplemental Benifits Per Hour:

1st Term	$12.72	$13.31
2nd Term	$13.36	$13.95
3rd Term	$13.77	$14.77
4th Term	$14.15	$15.15
5th Term	$17.38	$18.38

4-200 Pump & Tank

Plumber 01/01/2017

JOB DESCRIPTION Plumber **DISTRICT** 4

ENTIRE COUNTIES
Nassau, Suffolk

WAGES
Per Hour:

	07/01/2016	11/01/2016
Plumber	$ 50.48	$ 50.98

SUPPLEMENTAL BENEFITS
Per Hour:

Plumber	$ 36.97	$ 37.47

OVERTIME PAY
See (A, E, Q, *V) on OVERTIME PAGE
CODE "V" is only for SUNDAYS and HOLIDAYS WORKED

HOLIDAY
Paid: See (1) on HOLIDAY PAGE
Overtime: See (5, 6, 15, 16, 25) on HOLIDAY PAGE

REGISTERED APPRENTICES
One(1) Year Terms at the following percentage of Plumbers Rate:

1st Term	2nd Term	3rd Term	4th Term	5th Term
30%	40%	50%	60%	70%

Supplemental Benefits per hour:

	07/01/2016	11/01/2016
1st Term	$ 23.45	$ 23.95
2nd Term	25.76	26.26
3rd Term	27.13	27.63
4th Term	28.62	29.12
5th Term	30.20	30.70

4-200

Plumber 01/01/2017

JOB DESCRIPTION Plumber **DISTRICT** 4

ENTIRE COUNTIES
Nassau, Suffolk

WAGES
Per Hour:

	07/01/2016
Plumber	
MAINTENANCE ONLY	$ 30.30

Maintenance: Correction of problem(s)with the existing fixture or group of fixtures, preventive repairs or servicing of said fixtures

SUPPLEMENTAL BENEFITS
SUPPLEMENTAL BENEFITS
Per Hour:

Plumber	
Maintenance	$ 15.15

OVERTIME PAY
See (B, J) on OVERTIME PAGE

HOLIDAY
Paid: See (1) on HOLIDAY PAGE
Overtime: See (5, 6, 15, 16) on HOLIDAY PAGE

4-200 Maintance

Roofer 01/01/2017

JOB DESCRIPTION Roofer **DISTRICT** 4

ENTIRE COUNTIES
Nassau, Suffolk

WAGES

Per Hour	07/01/2016
ROOFER/Waterproofer	
Total Wage to be Paid	$ 43.75
"Base" Wage	39.75**

SUPPLEMENTAL BENEFITS

Per Hour:	
ROOFER/Waterproofer	$ 27.86

OVERTIME PAY
Per Hour:
NEW ROOF SEE (B,E,Q)
RE-ROOF SEE (B,E,E2,Q)
NOTE:** Overtime Pay to be calculated on "BASE" Wage then add $4.00.
(Example: $39.75 x time and one half = $59.63 + $4.00 = $63.63)

HOLIDAY
Paid: See (1) on HOLIDAY PAGE
Overtime: See (5, 6, 13, 16, 25) on HOLIDAY PAGE

REGISTERED APPRENTICES
(1) Year terms at the following Percentage of Roofers/Waterproofers Wage.

1st	2nd	3rd	4th
40%	50%	70%	80%

Supplemental Benefits per hour:

	07/01/2016
1st Term	$ 7.68
2nd Term	9.60
3rd Term	19.50
4th Term	22.29

4-154

Sheetmetal Worker 01/01/2017

JOB DESCRIPTION Sheetmetal Worker **DISTRICT** 4

ENTIRE COUNTIES
Bronx, Kings, Nassau, New York, Queens, Richmond, Rockland, Suffolk, Westchester

WAGES

Per Hour:	07/01/2016
Sign Erector	$ 46.85

NOTE: Structurally Supported Overhead Highway Signs(See STRUCTAL IRON WORKER CLASS)

SUPPLEMENTAL BENEFITS

Per Hour:	07/01/2016
Sign Erector	$ 42.34

OVERTIME PAY
See (A, F, S) on OVERTIME PAGE

HOLIDAY
Paid: See (5, 6, 10, 11, 12, 16, 25) on HOLIDAY PAGE
Overtime: See (5, 6, 10, 11, 12, 16, 25) on HOLIDAY PAGE

REGISTERED APPRENTICES
Per Hour:
6 month Terms at the following percentage of Sign Erectors wage rate:

1st	2nd	3rd	4th	5th	6th	7th	8th	9th	10th
35%	40%	45%	50%	55%	60%	65%	70%	75%	80%

SUPPLEMENTAL BENEFITS
Per Hour:

1st	2nd	3rd	4th	5th	6th	7th	8th	9th	10th
$11.78	$13.35	$14.93	$16.49	$23.12	$25.13	$27.87	$29.95	$32.04	$34.11

4-137-SE

Sheetmetal Worker 01/01/2017

JOB DESCRIPTION Sheetmetal Worker **DISTRICT** 4

ENTIRE COUNTIES
Bronx, Kings, Nassau, New York, Queens, Richmond, Suffolk

WAGES

Per Hour:	07/01/2016	08/01/2016
Sheetmetal Worker	$ 51.85	$ 53.22
Temporary Operation or Maintenace of Fans	42.46	42.58

SUPPLEMENTAL BENEFITS
Per Hour:

Sheetmetal Worker	$ 43.54	45.04
Maintenance Worker	43.54	45.04

OVERTIME PAY
See (A, E, E2, Q, V) on OVERTIME PAGE
For Maintenance See Codes B,E, Q & V

HOLIDAY
Paid: See (1) on HOLIDAY PAGE
Overtime: See (5, 6, 11, 15, 16, 25, 26) on HOLIDAY PAGE

REGISTERED APPRENTICES
Per Hour:Wages

Six(6) Month Terms As Follows:

1st & 2nd Term	$ 17.83	$ 18.67
3rd & 4th Term	22.91	23.98
5th & 6th Term	28.00	29.29
7th Term	35.64	37.28
8th Term	38.18	39.83
9th Term	40.73	42.59

Per Hour: Supplemental Benifits

1st & 2nd Term	$ 15.76	$ 16.49
3rd & 4th Term	21.80	22.75
5th & 6th Term	25.58	26.79
7th Term	31.27	32.84
8th Term	33.17	34.88
9th Term	35.07	36.84

Steamfitter **01/01/2017**

JOB DESCRIPTION Steamfitter **DISTRICT** 4

ENTIRE COUNTIES
Bronx, Kings, Nassau, New York, Queens, Richmond, Suffolk

WAGES

Per Hour:	07/01/2016	01/01/2017
AC Service/Heat Service Steamfitter Maintenance	$ 39.50	$ 39.50

Refrigeration, A/C, Oil Burner and Stoker Service and Repair.
Refrigeration Compressor installation up to 5hp (combined).
Air Condition / Heating Compressor installation up to 10hp (combined).

SUPPLEMENTAL BENEFITS
Per Hour

AC Service/Heat Service Steamfitter Maintenance	$ 12.00	$ 12.75

OVERTIME PAY
See (B, E, Q) on OVERTIME PAGE

HOLIDAY
Paid: See (5, 6, 11, 15, 25, 26) on HOLIDAY PAGE

4-638B-StmFtrRef

Steamfitter **01/01/2017**

JOB DESCRIPTION Steamfitter **DISTRICT** 4

ENTIRE COUNTIES
Bronx, Kings, Nassau, New York, Queens, Richmond, Suffolk

WAGES

Per Hour:	07/01/2016
Steam/Sprinkler Fitter	$ 61.06
Temporary Heat & AC	$ 46.42

NOTE: Add 30% to Hourly Wage for "Contracting Agency" Mandated Off Shift Work.

SUPPLEMENTAL BENEFITS
Per Hour:

Steam/Sprinkler Fitter	$ 47.27
Temporary Heat & AC	$ 38.78

OVERTIME PAY
See (C, *D, O, V) on OVERTIME PAGE
(*D) On all HVAC and Mechanical contracts that do not excedd $15,000,000. and on all fire protection/sprinklet contracts that do not exceed $1,500,000.

HOLIDAY
Paid: See (1) on HOLIDAY PAGE
Overtime: See (5, 6, 11, 15, 16, 25) on HOLIDAY PAGE

REGISTERED APPRENTICES
1 year Terms at the Following:

WAGES per hour:

1st Term 2nd Term 3rd Term 4th Term 5th Term

$ 24.46	$ 30.56	$ 39.71	$ 48.86	$ 51.91

SUPPLEMENTAL BENEFIT per hour:

1st Term	2nd Term	3rd Term	4th Term	5th Term
$ 19.30	$ 23.92	$ 30.81	$ 37.72	$ 40.02

4-638A-StmSpFtr

Teamster - Asphalt Delivery 01/01/2017

JOB DESCRIPTION Teamster - Asphalt Delivery **DISTRICT** 4

ENTIRE COUNTIES
Nassau, Suffolk

WAGES
Per Hour:

Heavy Construction Work:
Shall include the supply of Asphalt for construction, improvement and modification of all or any part of Streets, Highways, Bridges, Tunnels,Railroads, Canals, Dams, Airports, Schools, Power Generation Plants, where distance between project and asphalt plant is not more than 50 miles.

TRUCK DRIVER

	07/01/2016
Asphalt Delivery	$ 35.535

Light Construction Work:
Shall include the supply of Asphalt for construction of Single & Multi Family Homes, Town Houses, Apartment Buildings, including Driveways, Streets and Curbs within those projects. Parking Lots, Office Buildings, where distance between project and asphalt plant is not more than 50 miles.

TRUCK DRIVER

	07/01/2016
Asphalt Delivery	$ 29.94

SUPPLEMENTAL BENEFITS
Per Hour:

Heavy Construction Work
TRUCK DRIVER

	07/01/2016
Asphalt Delivery	$ 41.76

Light Construction Work
TRUCK DRIVER

	07/01/2016
Asphalt Delivery	$ 11.55

OVERTIME PAY
See (B, *B2, E, **I, P, ***R, ****U) on OVERTIME PAGE
(NOTE) PREMIUM PAY of 25% on straight time hours for New York State D.O.T. and or other GOVERNMENTAL MANDATED off shift work.
Note: (B,E,P,T&*U) Apply to Heavy Construction.
Note: (B2,I,T&*U) Apply to Light Construction.
Note: (*U) Only applies after 8 hours worked on holiday.

HOLIDAY
Paid: See (1) on HOLIDAY PAGE
Overtime: See (5, 6, *16, **25) on HOLIDAY PAGE
NOTE:(*16) Paid at Double if Worked; (**25) Paid at Double if Worked.

4-282

Teamster - Building 01/01/2017

JOB DESCRIPTION Teamster - Building **DISTRICT** 4

ENTIRE COUNTIES
Nassau, Suffolk

WAGES
Per Hour:
Truck Driver (Building Demolition & Debris)

	07/01/2016
Trailers	$ 32.13
Straight Jobs	$ 32.43

SUPPLEMENTAL BENEFITS
Per Hour:

All Classifications

	07/01/2016
	$ 31.34

OVERTIME PAY
See (B, E, S1) on OVERTIME PAGE

HOLIDAY
Paid: See (1) on HOLIDAY PAGE
Overtime: See (5, 6, 8, 11, 12, 15, 25, 26) on HOLIDAY PAGE

4-282

Teamster - Delivery of Concrete 01/01/2017

JOB DESCRIPTION Teamster - Delivery of Concrete **DISTRICT** 4

ENTIRE COUNTIES
Nassau, Suffolk

WAGES
Per Hour:

Heavy Construction Work:
Shall Include the supply of Ready-Mix Concrete for construction, improvment and modification of all or any part of Streets, Highways, Bridges, Tunnels, Railroads, Canals, Dams, Airports, Schools & Power Generation Plants, where distance between project and asphalt plant is not more than 50 miles.

TRUCK DRIVER

	07/01/2016
Concrete Delivery	$ 37.895

Light Construction Work:
Shall include the supply of Ready-Mix Concrete for construction of Single & Multi Family Homes, Town Houses, Apartment Buildings, including Driveways, Streets and Curbs within those projects. Parking Lots and Office Buildings, where distance between project and asphalt plant is not more than 50 miles.

TRUCK DRIVER

	07/01/2016
Concrete Delivery	$ 34.945

SUPPLEMENTAL BENEFITS
Per Hour:

	07/01/2016
Heavy Construction Work	
Concrete Delivery	$ 38.275
Light Construction Work	07/01/2016
Concrete Delivery	$ 11.525

OVERTIME PAY
NOTE: Heavy Construction:B2,I
Light Construction:B,E,P

HOLIDAY
Paid: See (1) on HOLIDAY PAGE
Overtime: See (5, 6, *16, **25) on HOLIDAY PAGE
NOTE:(*16) Paid at Double if Worked. (**25) Paid at Double if Worked.

4-282ns

Teamster - Heavy&Highway 01/01/2017

JOB DESCRIPTION Teamster - Heavy&Highway **DISTRICT** 4

ENTIRE COUNTIES
Nassau, Suffolk

WAGES

Per Hour:

Heavy Construction Work:
Shall include the construction, improvement or modification of all or any part of Streets, Highways, Bridges, Tunnels, Railroads, Canals, Dams, Airports, Schools, Power Generation Plants.

	07/01/2016
Site Excavating (Chauffeurs)	$ 35.535

Light Construction Work:
Shall include the construction, improvment and modification of Single & Multi Family Homes, Town Houses, Apartment Buildings, including Driveways, Streets and Curbs within those projects. Parking Lots and Office Buildings.

	07/01/2016
Site Excavating (Chauffeurs)	$ 29.94

SUPPLEMENTAL BENEFITS

Per Hour:	07/01/2016
Heavy Construction Work Chauffeurs	$ 41.7625
Light Construction Work Chauffers	$ 11.55

OVERTIME PAY
See (B, *B2, E, **I, P, ***R, ****U) on OVERTIME PAGE
(NOTE) PREMIUM PAY of 25% on straight time hours for NEW YORK STATE D.O.T. and or other GOVERMENTAL MANDATED off shift work.
Note: (B,E,P,T & *U) Apply to Heavy Construction.
Note: (B2,I,T & *U) Apply to Light Construction.
Note: (*U) Only applies after 8 hours work on holiday

HOLIDAY
Paid: See (1) on HOLIDAY PAGE
Overtime: See (5, 6, *16, **25) on HOLIDAY PAGE
NOTE:(*16) Paid at Double if Worked. (**25) Paid at Double if Worked.

4-282

Welder 01/01/2017

JOB DESCRIPTION Welder **DISTRICT** 1

ENTIRE COUNTIES
Albany, Allegany, Bronx, Broome, Cattaraugus, Cayuga, Chautauqua, Chemung, Chenango, Clinton, Columbia, Cortland, Delaware, Dutchess, Erie, Essex, Franklin, Fulton, Genesee, Greene, Hamilton, Herkimer, Jefferson, Kings, Lewis, Livingston, Madison, Monroe, Montgomery, Nassau, New York, Niagara, Oneida, Onondaga, Ontario, Orange, Orleans, Oswego, Otsego, Putnam, Queens, Rensselaer, Richmond, Rockland, Saratoga, Schenectady, Schoharie, Schuyler, Seneca, St. Lawrence, Steuben, Suffolk, Sullivan, Tioga, Tompkins, Ulster, Warren, Washington, Wayne, Westchester, Wyoming, Yates

WAGES
Per hour 07/01/2016

Welder: To be paid the same rate of the mechanic performing the work.*

*EXCEPTION: If a specific welder certification is required, then the 'Certified Welder' rate in that trade tag will be paid.

OVERTIME PAY

HOLIDAY

1-As Per Trade

Overtime Codes

Following is an explanation of the code(s) listed in the OVERTIME section of each classification contained in the attached schedule. Additional requirements may also be listed in the HOLIDAY section.

NOTE: Supplemental Benefits are 'Per hour worked' (for each hour worked) unless otherwise noted

(AA)	Time and one half of the hourly rate after 7 and one half hours per day
(A)	Time and one half of the hourly rate after 7 hours per day
(B)	Time and one half of the hourly rate after 8 hours per day
(B1)	Time and one half of the hourly rate for the 9th & 10th hours week days and the 1st 8 hours on Saturday. Double the hourly rate for all additional hours
(B2)	Time and one half of the hourly rate after 40 hours per week
(C)	Double the hourly rate after 7 hours per day
(C1)	Double the hourly rate after 7 and one half hours per day
(D)	Double the hourly rate after 8 hours per day
(D1)	Double the hourly rate after 9 hours per day
(E)	Time and one half of the hourly rate on Saturday
(E1)	Time and one half 1st 4 hours on Saturday; Double the hourly rate all additional Saturday hours
(E2)	Saturday may be used as a make-up day at straight time when a day is lost during that week due to inclement weather
(E3)	Between November 1st and March 3rd Saturday may be used as a make-up day at straight time when a day is lost during that week due to inclement weather, provided a given employee has worked between 16 and 32 hours that week
(E4)	Saturday and Sunday may be used as a make-up day at straight time when a day is lost during that week due to inclement weather
(E5)	Double time after 8 hours on Saturdays
(F)	Time and one half of the hourly rate on Saturday and Sunday
(G)	Time and one half of the hourly rate on Saturday and Holidays
(H)	Time and one half of the hourly rate on Saturday, Sunday, and Holidays
(I)	Time and one half of the hourly rate on Sunday
(J)	Time and one half of the hourly rate on Sunday and Holidays
(K)	Time and one half of the hourly rate on Holidays
(L)	Double the hourly rate on Saturday
(M)	Double the hourly rate on Saturday and Sunday
(N)	Double the hourly rate on Saturday and Holidays
(O)	Double the hourly rate on Saturday, Sunday, and Holidays
(P)	Double the hourly rate on Sunday
(Q)	Double the hourly rate on Sunday and Holidays
(R)	Double the hourly rate on Holidays
(S)	Two and one half times the hourly rate for Holidays, if worked

(S1) Two and one half times the hourly rate the first 8 hours on Sunday or Holidays One and one half times the hourly rate all additional hours.

(T) Triple the hourly rate for Holidays, if worked

(U) Four times the hourly rate for Holidays, if worked

(V) Including benefits at SAME PREMIUM as shown for overtime

(W) Time and one half for benefits on all overtime hours.

Holiday Codes

PAID Holidays:

Paid Holidays are days for which an eligible employee receives a regular day's pay, but is not required to perform work. If an employee works on a day listed as a paid holiday, this remuneration is in addition to payment of the required prevailing rate for the work actually performed.

OVERTIME Holiday Pay:

Overtime holiday pay is the premium pay that is required for work performed on specified holidays. It is only required where the employee actually performs work on such holidays. The applicable holidays are listed under HOLIDAYS: OVERTIME. The required rate of pay for these covered holidays can be found in the OVERTIME PAY section listings for each classification.

Following is an explanation of the code(s) listed in the HOLIDAY section of each classification contained in the attached schedule. The Holidays as listed below are to be paid at the wage rates at which the employee is normally classified.

(1)	None
(2)	Labor Day
(3)	Memorial Day and Labor Day
(4)	Memorial Day and July 4th
(5)	Memorial Day, July 4th, and Labor Day
(6)	New Year's, Thanksgiving, and Christmas
(7)	Lincoln's Birthday, Washington's Birthday, and Veterans Day
(8)	Good Friday
(9)	Lincoln's Birthday
(10)	Washington's Birthday
(11)	Columbus Day
(12)	Election Day
(13)	Presidential Election Day
(14)	1/2 Day on Presidential Election Day
(15)	Veterans Day
(16)	Day after Thanksgiving
(17)	July 4th
(18)	1/2 Day before Christmas
(19)	1/2 Day before New Years
(20)	Thanksgiving
(21)	New Year's Day
(22)	Christmas
(23)	Day before Christmas
(24)	Day before New Year's
(25)	Presidents' Day
(26)	Martin Luther King, Jr. Day
(27)	Memorial Day

New York State Department of Labor - Bureau of Public Work
State Office Building Campus
Building 12 - Room 130
Albany, New York 12240

REQUEST FOR WAGE AND SUPPLEMENT INFORMATION

As Required by Articles 8 and 9 of the NYS Labor Law

Fax (518) 485-1870 or mail this form for new schedules or for determination for additional occupations.

This Form Must Be Typed

Submitted By: (Check Only One) ☐ Contracting Agency ☐ Architect or Engineering Firm ☐ Public Work District Office Date:

A. Public Work Contract to be let by: (Enter Data Pertaining to Contracting/Public Agency)

1. Name and complete address ☐ (Check if new or change)

Telephone: ( ) Fax: ( )
E-Mail:

2. NY State Units (see Item 5)

- ☐ 01 DOT
- ☐ 02 OGS
- ☐ 03 Dormitory Authority
- ☐ 04 State University Construction Fund
- ☐ 05 Mental Hygiene Facilities Corp.
- ☐ 06 OTHER N.Y. STATE UNIT
- ☐ 07 City
- ☐ 08 Local School District
- ☐ 09 Special Local District, i.e., Fire, Sewer, Water District
- ☐ 1O Village
- ☐ 11 Town
- ☐ 12 County
- ☐ 13 Other Non-N.Y. State (Describe)

3. SEND REPLY TO (☐ check if new or change)
Name and complete address:

Telephone:( ) Fax: ( )
E-Mail:

4. SERVICE REQUIRED. Check appropriate box and provide project information.

- ☐ New Schedule of Wages and Supplements.

APPROXIMATE BID DATE :

- ☐ Additional Occupation and/or Redetermination

PRC NUMBER ISSUED PREVIOUSLY FOR THIS PROJECT :

OFFICE USE ONLY

B. PROJECT PARTICULARS

5. Project Title _____

Description of Work _____

Contract Identification Number _____

Note: For NYS units, the OSC Contract No. _____

6. Location of Project:
Location on Site _____

Route No/Street Address _____

Village or City _____

Town _____

County _____

7. Nature of Project - Check One:

- ☐ 1. New Building
- ☐ 2. Addition to Existing Structure
- ☐ 3. Heavy and Highway Construction (New and Repair)
- ☐ 4. New Sewer or Waterline
- ☐ 5. Other New Construction (Explain)
- ☐ 6. Other Reconstruction, Maintenance, Repair or Alteration
- ☐ 7. Demolition
- ☐ 8. Building Service Contract

8. OCCUPATION FOR PROJECT :

- ☐ Construction (Building, Heavy Highway/Sewer/Water)
- ☐ Tunnel
- ☐ Residential
- ☐ Landscape Maintenance
- ☐ Elevator maintenance
- ☐ Exterminators, Fumigators
- ☐ Fire Safety Director, NYC Only
- ☐ Guards, Watchmen
- ☐ Janitors, Porters, Cleaners, Elevator Operators
- ☐ Moving furniture and equipment
- ☐ Trash and refuse removal
- ☐ Window cleaners
- ☐ Other (Describe)

9. Has this project been reviewed for compliance with the Wicks Law involving separate bidding? YES ☐ NO ☐

10. Name and Title of Requester

Signature

SEE PAGE TWO FOR LAWS RELATING TO PUBLIC WORK CONTRACTS

NEW YORK STATE DEPARTMENT OF LABOR
Bureau of Public Work - Debarment List

LIST OF EMPLOYERS INELIGIBLE TO BID ON OR BE AWARDED ANY PUBLIC WORK CONTRACT

Under Article 8 and Article 9 of the NYS Labor Law, a contractor, sub-contractor and/or its successor shall be debarred and ineligible to submit a bid on or be awarded any public work or public building service contract/sub-contract with the state, any municipal corporation or public body for a period of five (5) years from the date of debarment when:

- Two (2) final determinations have been rendered within any consecutive six-year (6) period determining that such contractor, sub-contractor and/or its successor has WILLFULLY failed to pay the prevailing wage and/or supplements
- One (1) final determination involves falsification of payroll records or the kickback of wages and/or supplements

NOTE: The agency issuing the determination and providing the information, is denoted under the heading 'Fiscal Officer'. DOL = NYS Dept. of Labor; NYC = New York City Comptroller's Office; AG = NYS Attorney General's Office; DA = County District Attorney's Office.

A list of those barred from bidding, or being awarded, any public work contract or subcontract with the State, under section 141-b of the Workers' Compensation Law, may be obtained at the following link, on the NYS DOL Website:

https://dbr.labor.state.ny.us/EDList/searchPage.do

NYSDOL Bureau of Public Work Debarment List 01/04/2017

Article 8

AGENCY	Fiscal Officer	FEIN	EMPLOYER NAME	EMPLOYER DBA NAME	ADDRESS	DEBARMENT START DATE	DEBARMENT END DATE
DOL	DOL		4618 FOSTER AVE LLC		C/O KAHAN & KAHAN 225 BROADWAY-SUITE 715NEW YORK NY 10007	02/05/2013	02/05/2018
DOL	DOL	*****0996	A-1 CONSTRUCTION & RENOVATION INC		1973 81ST ST - SUITE A-5 BROOKLYN NY 11214	01/08/2015	01/08/2020
DOL	NYC	*****4486	ABBEY PAINTING CORP		21107 28TH AVENUE BAYSIDE NY 11360	07/02/2012	07/02/2017
DOL	DOL	*****9095	ABDO TILE CO		6179 EAST MOLLOY ROAD EAST SYRACUSE NY 13057	06/25/2010	07/02/2017
DOL	DOL	*****9095	ABDO TILE COMPANY		6179 EAST MOLLOY ROAD EAST SYRACUSE NY 13057	06/25/2010	07/02/2017
DOL	NYC		ABDUL KARIM		C/O NORTH AMERICAN IRON W 1560 DECATUR STREETRIDGEWOOD NY 11385	05/15/2015	05/15/2020
DOL	DOL	*****8488	ABELCRAFT OF NEW YORK CORP		640 ASHFORD AVENUE ARDSLEY NY 10502	08/27/2013	08/27/2018
DOL	DOL	*****1219	ABSOLUTE GENERAL CONTRACTING INC		1229 AVENUE U BROOKLYN NY 11229	01/28/2013	01/28/2018
DOL	DOL	*****4539	ACCOMPLISHED WALL SYSTEMS INC		112 OSCAWANA HEIGHTS ROAD PUTNAM VALLEY NY 10542	08/27/2013	08/27/2018
DOL	DOL	*****8018	ACCURATE MECHANICAL LLC		9547 BUSTLETON AVENUE PHILADELPHIA PA 19115	02/05/2014	02/05/2019
DOL	DOL		ACCURATE MECHANICAL OF PHILADELPHIA LLC		9547 BUSTLETON AVENUE PHILADELPHIA PA 19115	02/05/2014	02/05/2019
DOL	DOL	*****3344	ACT INC		6409 LAND O LAKES BLVD LAND O LAKES FL 34638	11/10/2015	11/10/2020
DOL	DOL	*****7584	ADAM'S FLOOR COVERING LLC		2718 CURRY ROAD SCHENECTADY NY 12303	07/08/2010	02/15/2017
DOL	DOL		ADESUWA UWUIGBE		P O BOX 21-1022 BROOKLYN NY 11221	05/16/2012	05/16/2017
DOL	NYC		ADRIANA SELA	C/O COLONIAL ROOFING COMPANY INC	247 48TH STREET BROOKLYN NY 11220	02/05/2014	02/05/2019
DOL	DOL	*****6367	ADVANCED METALS		387 RIVERSIDE DRIVE JOHNSON CITY NY 13790	10/01/2012	10/01/2017
DOL	DOL	*****1687	ADVANCED SAFETY SPRINKLER INC		261 MILL ROAD P O BOX 296EAST AURORA NY 14052	07/29/2015	07/29/2020
DOL	DOL	*****2538	AGG MASONRY INC		160 72ND ST - SUITE 721 BROOKLYN NY 11209	03/19/2013	03/19/2018
DOL	DOL		AJ TORCHIA		10153 ROBERTS RD SAUQUOIT NY 13456	08/09/2016	08/09/2021
DOL	DOL		ALISHER KARIMOV		C/O AGG MASONRY INC 7105 3RD AVENUEBROOKLYN NY 11209	03/19/2013	03/19/2018
DOL	DOL	*****3344	ALL CATASTROPHE CONSTRUCTION TEAM INC	ACT INC	6409 LAND O LAKES BLVD LAND O LAKES FL 34638	11/10/2015	11/10/2020
DOL	DOL	*****8740	ALLSTATE ENVIRONMENTAL CORP		C/O JOSE MONTAS 27 BUTLER PLACEYONKERS NY 10710	03/18/2011	03/19/2020
DOL	DOL		AMADEO J TORCHIA	TORCHIA'S HOME IMPROVEMEN T	10153 ROBERTS RD SAUQUOIT NY 13456	08/09/2016	08/09/2021
DOL	DOL	*****4274	AMERICAN STEEL MECHANICAL INC		693 PAINTER STREET MEDIA PA 19063	02/20/2013	02/20/2018
DOL	DOL		ANDREW DIPAUL		C/O CONSOLIDATED INDUSTRI 2051 ROUTE 44/55MODENA NY 12548	12/11/2012	12/11/2017
DOL	NYC		ANDRZEJ WROBEL		24 CONGRESS LANE SOUTH RIVER NJ 08882	05/01/2013	05/01/2018
DOL	NYC		ANISUL ISLAM		C/O RELIANCE GENERAL CONS 644 OCEAN PARKWAYBROOKLYN NY 11230	09/02/2015	09/02/2020
DOL	DOL	*****7004	ANNEX CONTRACTING LTD		3005 WYNSUM AVENUE MERRICK NY 11566	08/18/2014	08/18/2019
DOL	DOL	*****7004	ANNEX GENERAL CONTRACTING INC		3005 WYNSUM AVENUE MERRICK NY 11566	08/18/2014	08/18/2019
DOL	DA		ANTHONY CARDINALE		58-48 59TH STREET MASPETH NY 11378	05/16/2012	05/08/2020

DOL	DOL		ANTHONY J MINGARELLI JR		C/O T & T CONCRETE INC 2560 HAMBURG TURNPIKELACKAWANNA NY 14218	07/08/2015	07/08/2020
DOL	DOL	*****3020	APCO CONTRACTING CORP		24 SOUTH MARYLAND AVENUE PORT WASHINGTON NY 11050	09/24/2012	09/02/2020
DOL	DOL	*****3219	APOLLO CONSTRUCTION SERVICES CORP	APOLLO PAINTING CO	157 TIBBETTS ROAD YONKERS NY 10705	03/12/2014	03/12/2019
DOL	DOL		APOLLO PAINTING CO		157 TIBBETTS ROAD YONKERS NY 10705	03/12/2014	03/12/2019
DOL	DOL	*****3295	APOLLO PAINTING CORP		3 ALAN B SHEPART PLACE YONKERS NY 10705	03/12/2014	03/12/2019
DOL	AG	*****0194	APPLIED CONSTRUCTION INC		46 RUGBY ROAD WESTBURY NY 11590	11/20/2013	11/20/2018
DOL	NYC	*****8403	AQUA JET PAINTING CORP		10 VIKING DRIVE WEST ISLIP NY 11795	04/16/2014	04/16/2019
DOL	NYC	*****9232	ARKAY CONSTRUCTION INC		102-104 GREYLOCK AVENUE BELLEVILLE NJ 07109	07/15/2015	07/15/2020
DOL	DOL	*****3953	ASCAPE LANDSCAPE & CONSTRUCTION CORP		634 ROUTE 303 BLAUVELT NY 10913	07/26/2012	11/19/2018
DOL	NYC	*****4779	ASTORIA GENERAL CONTRACTING CORP		35-34 31ST STREET LONG ISLAND CITY NY 11106	09/02/2015	09/02/2020
DOL	NYC	*****7217	ASTRO COMMUNICATIONS OF NY CORP		79 ALEXANDER AVE- STE 36A BRONX NY 10454	10/30/2015	10/30/2020
DOL	NYC	*****6046	ATLANTIC SUN CONTRUCTION CORP		58-46 59TH AVENUE MASPETH NY 11378	05/08/2015	05/08/2020
DOL	NYC		AUDLEY O'BRIEN		1273 NORTH AVENUE/#1 CP NEW ROCHELLE NY 10804	04/07/2015	04/07/2020
DOL	DOL		AVIS R HILL		3510 HICKORY WALK LANE ELLENWOOD GA 32094	01/22/2015	01/22/2020
DOL	AG		AVTAR SINGH		116-24 127TH STREET SOUTH OZONE PARK NY 11420	12/22/2015	12/22/2020
DOL	AG		BALDEV SINGH		116-24 127TH STREET SOUTH OZONE PARK NY 11420	12/22/2015	12/22/2020
DOL	DOL		BARBARA CASSIDY		7 BLENIS PLACE VALHALLA NY 10595	04/02/2015	04/02/2020
DOL	DOL		BARRY KINNEY		6409 LAND O LAKES BLVD LAND O LAKES FL 34638	11/10/2015	11/10/2020
DOL	NYC	*****3915	BEACON RESTORATION INC		SUITE B-8 782 PELHAM PARKWAY SOUTHBRONX NY 10462	04/21/2016	04/21/2021
DOL	DOL	*****2294	BEDELL CONTRACTING CORP		2 TINA LANE HOPEWELL JUNCTION NY 12533	01/06/2012	01/06/2017
DOL	DOL		BEVERLY F WILLIAMS		1238 PRESIDENT STREET BROOKLYN NY 11225	11/18/2013	11/18/2018
DOL	DOL		BIAGIO CANTISANI		200 FERRIS AVENUE WHITE PLAINS NY 10603	12/04/2009	05/04/2017
DOL	DOL	*****8551	BRANDY'S MASONRY		216 WESTBROOK STREET P O BOX 304SAYRE PA 18840	08/09/2016	08/09/2021
DOL	NYC	*****6555	BROOKLYN WELDING CORP		1273 NORTH AVENUE/ #1 CP NEW ROCHELLE NY 10804	04/07/2015	04/07/2020
DOL	DOL	*****1449	BRRESTORATION NY INC		140 ARCADIA AVENUE OSWEGO NY 13126	09/12/2016	09/12/2021
DOL	DOL		BRUCE MORSEY		C/O KENT HOLLOW SIDING LL 29A BRIDGE STREETNEW MILFORD CT 06776	01/15/2016	01/15/2021
DOL	DOL	*****6156	C & J LANDSCAPING & MAINTENANCE INC		520 PINE HILL ROAD CHESTER NY 10940	06/23/2014	06/23/2019
DOL	DOL		CANTISANI & ASSOCIATES LTD		442 FERRIS AVENUE WHITE PLAINS NY 10603	12/04/2009	05/04/2017
DOL	DOL		CANTISANI HOLDING LLC		220 FERRIS AVENUE WHITE PLAINS NY 10603	05/04/2012	05/04/2017
DOL	DOL		CARIBBEAN POOLS		C/O DOUGLAS L MALARKEY 64 VICTORIA DRIVEBINGHAMTON NY 13904	02/04/2016	02/04/2021
DOL	DOL	*****1143	CARMODY BUILDING CORP		442 ARMONK ROAD MOUNT KISCO NY 10549	05/04/2012	05/04/2017
DOL	DOL	*****3368	CARMODY CONCRETE CORP		442 ARMONK ROAD MOUNT KISCO NY 10549	12/04/2009	05/04/2017
DOL	DOL		CARMODY CONTRACTING CORP		220 FERRIS AVENUE WHITE PLAINS NY 10603	05/04/2012	05/04/2017
DOL	DOL	*****6215	CARMODY CONTRACTING INC		220 FERRIS AVENUE WHITE PLAINS NY 10603	05/04/2012	05/04/2017

DOL	DOL		CARMODY ENTERPRISES LTD		220 FERRIS AVENUE WHITE PLAINS NY 10603	12/04/2009	05/04/2017
DOL	DOL	*****3812	CARMODY INC		442 ARMONK ROAD MOUNT KISCO NY 10549	12/04/2009	05/04/2017
DOL	DOL	*****3812	CARMODY INDUSTRIES INC		442 FERRIS AVENUE WHITE PLAINS NY 10603	05/04/2012	05/04/2017
DOL	DOL		CARMODY MAINTENANCE CORP		105 KISCO AVENUE MOUNT KISCO NY 10549	05/04/2012	05/04/2017
DOL	DOL	*****0324	CARMODY MASONRY CORP		442 ARMONK ROAD MOUNT KISKO NY 10549	12/04/2009	05/04/2017
DOL	DOL	*****3812	CARMODY"2" INC		220 FERRIS AVENUE WHITE PLAINS NY 10603	12/04/2009	05/04/2017
DOL	NYC	*****9172	CASSIDY EXCAVATING INC		14 RAILROAD AVENUE VALHALLA NY 10595	05/15/2014	04/02/2020
DOL	DOL	*****1683	CATONE CONSTRUCTION COMPANY INC		294 ALPINE ROAD ROCHESTER NY 14423	03/09/2012	03/09/2017
DOL	DOL		CATONE ENTERPRISES INC		225 DAKOTA STREET ROCHESTER NY 14423	03/09/2012	03/09/2017
DOL	DOL	*****6745	CATSKILL FENCE INSTALLATIONS INC		5445 ROUTE 32 CATSKILL NY 12414	08/22/2014	08/22/2019
DOL	DOL	*****8530	CAZ CONTRACTING CORP		37-11 35TH AVENUE LONG ISLAND CITY NY 11101	08/26/2013	08/26/2018
DOL	DOL	*****5556	CERTIFIED INSTALLERS INC		113 N MAPLE AVENUE GREENSBURG PA 15601	02/21/2013	02/21/2018
DOL	DOL	*****7655	CHAMPION CONSTRUCTION SERVICES CORP		2131 SCHENECTADY AVENUE BROOKLYN NY 11234	11/18/2015	11/18/2020
DOL	NYC		CHARLES CASSIDY JR		14 RAILROAD AVENUE VALHALLA NY 10595	05/15/2014	04/02/2020
DOL	DOL		CHARLES ZIMMER JR		216 WESTBROOK STREET P O BOX 304SAYRE PA 18840	08/09/2016	08/09/2021
DOL	DOL	*****1416	CHEROMINO CONTROL GROUP LLC		61 WILLET ST - SUITE 14 PASSAIC NJ 07055	12/03/2009	02/23/2017
DOL	DOL		CHRISTINE J HEARNE		C/O CJ-HEARNE CONSTRUCTIO 131 PONCE DE LEON AVE NEATLANTA GA 30308	12/01/2015	12/01/2020
DOL	DOL		CHRISTOF PREZBYL		2 TINA LANE HOPEWELL JUNCTION NY 12533	01/06/2012	01/06/2017
DOL	DOL	*****3360	CITY LIMITS GROUP INC		2279 HOLLERS AVENUE BRONX NY 10475	01/07/2014	06/23/2019
DOL	DOL	*****0671	CJ-HEARNE CONSTRUCTION CO		SUITE 204 131 PONCE DE LEON AVENUEATLANTA GA 30308	12/01/2015	12/01/2020
DOL	NYC	*****2905	COLONIAL ROOFING COMPANY INC		247 48TH STREET BROOKLYN NY 11220	02/05/2014	02/05/2019
DOL	NYC	*****3182	COLORTECH INC		5990 58TH AVENUE MASPETH NY 11378	11/18/2013	11/18/2018
DOL	DOL	*****2703	CONKLIN'S TECH-MECHANICAL INC		5 PARKER AVENUE POUGHKEEPSIE NY 12601	03/25/2014	03/25/2019
DOL	DOL	*****4175	CONSOLIDATED INDUSTRIAL SERVICES INC		2051 ROUTE 44/55 MODENA NY 12548	12/11/2012	01/28/2018
DOL	DOL		CONSTANTINOS ZERVAS		37-11 35TH AVENUE LONG ISLAND CITY NY 11101	08/26/2013	08/26/2018
DOL	NYC	*****4468	CRAFT CONTRACTING GROUP INC		3256 BRUNER AVENUE BRONX NY 10469	07/29/2014	07/29/2019
DOL	NYC	*****8507	CRAFT FENCE INC		3256 BRUNER AVENUE BRONX NY 10469	07/29/2014	07/29/2019
DOL	NYC	*****2164	CREATIVE TRUCKING INC		58-83 54TH STREET MASPETH NY 11378	02/26/2016	02/26/2021
DOL	DOL	*****0810	D & G PAINTING & DECORATING INC		53 LITTLE COLLABAR ROAD MONTGOMERY NY 12549	04/19/2012	04/19/2017
DOL	DOL	*****7761	D L MALARKEY CONSTRUCTION		64 VICTORIA DRIVE BINGHAMTON NY 13904	02/04/2016	02/04/2021
DOL	DOL	*****7888	D L MALARKEY CONSTRUCTION INC		64 VICTORIA DRIVE BINGHAMTON NY 13904	02/04/2016	02/04/2021
DOL	DOL	*****5629	DAKA PLUMBING AND HEATING LLC		2561 ROUTE 55 POUGHQUAG NY 12570	02/19/2016	02/19/2021
DOL	DOL		DARYL T RIEKS		C/O RIEKS CONTRACTING LLC 4804 GAHWILER ROADAUBURN NY 13021	05/01/2015	05/01/2020
DOL	NYC	*****7707	DASSLE CONTRACTING INC		213-37 39TH AVE/SUITE 120 BAYSIDE NY 11360	05/08/2015	05/08/2020
DOL	DOL		DAVID MARTINEZ		C/O EMPIRE TILE INC 6 TREMONT COURTHUNTINGTON STATION NY 11746	03/08/2016	03/08/2021

DOL	NYC		DAWN AVILA AKA DAWN BECHTOLD		1ST FLOOR STORE FRONT 88-10 LITTLE NECK PARKWAYFLORAL PARK NY 11001	06/24/2014	06/24/2019
DOL	NYC		DAWN BECHTOLD AKA DAWN AVILA		1ST FLOOR STORE FRONT 88-10 LITTLE NECK PARKWAYFLORAL PARK NY 11001	06/24/2014	06/24/2019
DOL	DOL		DEAN ROBBINS III		212 OXFORD WAY SCHENECTADY NY 12309	12/11/2012	09/16/2018
DOL	NYC	*****3865	DECOMA BUILDING CORPORATION		134 EVERGREEN PL/STE 101 EAST ORANGE NJ 07018	12/30/2013	12/30/2018
DOL	DOL		DEDA GAZIVODAN		C/O DAKA PLUMBING AND H 2561 ROUTE 55POUGHQUAG NY 12570	02/19/2016	02/19/2021
DOL	DOL	*****1446	DELTA CONTRACTING PAINTING AND DECORATING INC		437 SUNRISE HIGHWAY WEST BABYLON NY 11707	08/12/2013	08/12/2018
DOL	DOL	*****3538	DELTA CONTRACTING PAINTING AND DESIGN INC		75 MCCULLOCH DRIVE DIX HILLS NY 11746	10/19/2010	08/12/2018
DOL	DOL		DEMETRIOS KOUTSOURAS		530 BEECH STREET NEW HYDE PARK NY 11040	07/02/2012	07/02/2017
DOL	DOL		DENNIS SCHWANDTNER		C/O YES SERVICE AND REPAI 325 RABRO DRIVE - SUITE 1HAUPPAUGE NY 11788	08/09/2016	08/09/2021
DOL	DOL	*****9868	DESANTIS ENTERPRISES		161 OSWEGO RIVER ROAD PHOENIX NY 13135	09/24/2013	11/18/2018
DOL	NYC	*****8234	DEWATERS PLUMBING AND HEATING LLC		30 COLUMBUS CIRCLE EASTCHESTER NY 10709	08/21/2012	08/21/2017
DOL	DOL	*****9252	DI BERNARDO TILE AND MARBLE CO INC		15 WALKER WAY ALBANY NY 12205	03/21/2014	03/21/2019
DOL	DOL		DIANE DEAVER		731 WARWICK TURNPIKE HEWITT NJ 07421	06/25/2012	12/11/2017
DOL	NYC		DIMITRIOS KOUTSOUKOS		C/O ASTORIA GENERAL CONTR 35-34 31ST STREETLONG ISLAND CITY NY 11106	09/02/2015	09/02/2020
DOL	DA	*****6789	DOL	DBA NAME QMC	BUILDING 12 ALBANY NY 12240	12/01/2017	12/01/2018
DOL	DOL		DORIS SKODA		C/O APCO CONTRACTING CORP 24 SOUTH MARYLAND AVENUEPORT WASHINGTON NY 11050	09/24/2012	09/02/2020
DOL	NYC	*****7404	DOSANJH CONSTRUCTION CORP		9439 212TH STREET QUEENS VILLAGE NY 11428	02/25/2016	02/25/2021
DOL	DOL		DOUGLAS L MALARKEY	MALARKEY CONSTRUCTI ON	64 VICTORIA DRIVE B INGHAMTON NY 13904	02/04/2016	02/04/2021
DOL	DOL	*****6982	DUFOUR GROUP INC	DUFOUR MASONRY	353 WEST 56TH STREET #7M NEW YORK NY 10019	06/10/2014	06/10/2019
DOL	DOL		DUFOUR MASONRY		353 WEST 56TH ST #7M NEW YORK NY 10019	06/10/2014	06/10/2019
DOL	DOL		DUFOUR MASONRY & RESTORATION INC		353 WEST 56TH STREET #7M NEW YORK NY 10019	06/10/2014	06/10/2019
DOL	DOL	*****5840	DYNA CONTRACTING INC		363 88TH STREET BROOKLYN NY 11209	11/18/2013	11/18/2018
DOL	DOL		E C WEBB		6409 LAND O LAKES BLVD LAND O LAKES FL 34638	11/10/2015	11/10/2020
DOL	DOL		EARL GALBREATH		640 ASHFORD AVENUE ARDSLEY NY 10502	08/27/2013	08/27/2018
DOL	DOL		EARL L WILSON	WILSON BROTHER DRYWALL CONTRACTOR S	36 ABERSOLD STREET ROCHESTER NY 14621	08/31/2015	08/31/2020
DOL	DOL	*****1496	EAST COAST DRYWALL INC		1238 PRESIDENT STREET BROOKLYN NY 11225	11/18/2013	11/18/2018
DOL	DOL	*****8011	ECOA CLEANING CONTRACTORS INC		P O BOX 21-1022 BROOKLYN NY 11221	05/16/2012	05/16/2017
DOL	DOL		EDWARD L GAUTHIER		C/O IMPERIAL MASONRY REST 141 ARGONNE DRIVEKENMORE NY 14217	10/03/2012	10/03/2017
DOL	NYC		EDWARD MENKEN		C/O AQUA JET PAINTING 10 VIKING DRIVEWEST ISLIP NY 11795	04/16/2014	04/16/2019
DOL	NYC	*****0900	EF PRO CONTRACTING INC		147 BROOME AVENUE ATLANTIC BEACH NY 11509	03/03/2014	03/03/2019

DOL	NYC		EFSTRATIOS BERNARDIS		23-73 48TH STREET LONG ISLAND CITY NY 11103	04/24/2014	04/24/2019
DOL	DOL		ELIZABETH RAMADANI		C/O RAMADA CONSTRUCTION 80 SAVO LOOPSTATEN ISLAND NY 10309	01/07/2014	01/07/2019
DOL	DOL		ELLEN DESANTIS	DESANTIS ENTERPRISES	161 OSWEGO RIVER ROAD PHOENIX NY 13135	09/24/2013	11/18/2018
DOL	DOL	*****0780	EMES HEATING & PLUMBING CONTR		5 EMES LANE MONSEY NY 10952	01/20/2002	01/20/3002
DOL	AG		EMILIO FRANZA		90 JUNIUS STREET BROOKLYN NY 11212	01/23/2014	01/23/2019
DOL	DOL		EMPIRE CONCRETE SERVICES LLC		101 SULLYS TRAIL/SUITE 20 PITTSFORD NY 14534	11/18/2013	01/07/2019
DOL	DOL	*****0511	EMPIRE CONCRETE SYSTEMS LLC		101 SULLYS TRAIL/ SUITE 2 PITTSFORD NY 14534	11/18/2013	01/07/2019
DOL	DOL	*****2353	EMPIRE CONSTRUCTORS LLC		101 SULLYS TRAIL/SUITE 20 PITTSFORD NY 14534	11/18/2013	01/07/2019
DOL	DOL		EMPIRE PRECAST LLC		101 SULLYS TRAIL/SUITE 20 PITTSFORD NY 14534	11/18/2013	01/07/2019
DOL	DOL	*****3270	EMPIRE TILE INC		6 TREMONT COURT HUNTINGTON STATION NY 11746	03/08/2016	03/08/2021
DOL	DOL		ERIKA BARNETT		253 BEACH BREEZE LANE UNIT BARVERNE NY 11692	02/05/2013	02/05/2018
DOL	DOL		ESTEVES & FRAGA CONSTRUCTION CO INC		986 MADISON AVENUE PATERSON NJ 07501	01/03/2013	01/03/2018
DOL	DOL		ESTEVES & FRAGA INC		986 MADISON AVENUE PATERSON NJ 07501	01/03/2013	01/03/2018
DOL	DOL		EVELIO ELLEDIAS		114 PEARL STREET PORT CHESTER NY 10573	08/15/2012	08/15/2017
DOL	NYC		EVERTON CARLESS		134 EVERGREEN PL/STE 101 EAST ORANGE NJ 07018	12/30/2013	12/30/2018
DOL	DOL	*****7403	F & B PAINTING CONTRACTING INC		2 PARKVIEW AVENUE HARRISON NY 10604	09/26/2016	09/26/2021
DOL	DOL		F KALAFATIS		2279 HOLLERS AVENUE BRONX NY 10475	01/07/2014	06/23/2019
DOL	DOL		FANTASTIC PAINTING		493 LANSING ROAD FULTONVILLE NY 12072	11/18/2013	11/18/2018
DOL	DOL		FAY MATTHEW		C/O CHAMPION CONSTRUCTION 2131 SCHENECTADY AVENUEBROOKLYN NY 11234	11/18/2015	11/18/2020
DOL	DOL		FAZIA GINA ALI-MOHAMMED	C/O CHAMPION CONSTRUCTI ON	2131 SCHENECTADY AVENUE BROOKLYN NY 11234	11/18/2015	11/18/2020
DOL	DOL	*****1311	FLOZ-ON PAINTING & DECORATING INC		12 DUNDERBERG ROAD TOMKINS NY 10986	10/16/2013	10/16/2018
DOL	DOL	*****8961	FLOZ-ON PAINTING INC		12 DUNDERBERG ROAD TOMKINS NY 10986	10/16/2013	10/16/2018
DOL	DOL		FMS		4 LEGHORN COURT NEW YORK NY 11746	11/28/2012	11/28/2017
DOL	DOL	*****8067	FORTH SPORT FLOORS INC		P O BOX 74 EAST GREENBUSH NY 12061	02/28/2012	10/01/2017
DOL	DOL		FRAN MICELI		2279 HOLLERS AVENUE BRONX NY 10475	01/07/2014	06/23/2019
DOL	DOL		FRANCES KALAFATIS		2279 HOLLERS AVENUE BRONX NY 10475	01/07/2014	06/23/2019
DOL	DOL		FRANCES KALAFATIS-MICELI		2279 HOLLERS AVENUE BRONX NY 10475	01/07/2014	06/23/2019
DOL	DOL		FRANK BENEDETTO		C/O F & B PAINTING CONTRA 2 PARKVIEW AVENUEHARRISON NY 10604	09/26/2016	09/26/2021
DOL	DOL		FRANK J MERCANDO		134 MURRAY AVENUE YONKERS NY 10704	12/11/2009	02/03/2019
DOL	DOL		FRANK MICELI JR	C/O FRANK MICELI JR CONTRACTIN G INC	19 CLIFF STREET NEW ROCHELLE NY 10801	10/16/2013	10/16/2018
DOL	DOL	*****1321	FRANK MICELI JR CONTRACTING INC		19 CLIFF STREET NEW ROCHELLE NY 10801	10/16/2013	10/16/2018
DOL	DOL		FRED ABDO	ABDO TILE COMPANY AKA ABDO TILE CO	6179 EAST MOLLOY ROAD EAST SYRACUSE NY 13057	06/25/2010	07/02/2017
DOL	DOL	*****2724	FRESH START PAINTING CORP		157 TIBBETS ROAD YONKERS NY 10705	03/12/2014	03/12/2019

DOL	DOL		G FUCCI CONSTRUCTION SERVICES		3 ALAN B SHEPARD PLACE YONKERS NY 10705	03/12/2014	03/12/2019
DOL	DOL	*****6767	G FUCCI PAINTING INC		C/O SPIEGEL & UTRERA 1 MAIDEN LANE - 5TH FLNEW YORK NY 10038	03/12/2014	03/12/2019
DOL	DOL	*****4546	GAF PAINTING LLC		157 TIBBETS ROAD YONKERS NY 10705	03/12/2014	03/12/2019
DOL	DOL		GALINDA ROTENBERG		C/O GMDV TRANS INC 67-48 182ND STREETFRESH MEADOWS NY 11365	06/24/2016	06/24/2021
DOL	DOL		GARDEN STATE PAINTING		157 TIBBETTS ROAD YONKERS NY 10705	03/12/2014	03/12/2019
DOL	DOL		GARY MCDOWELL	GM CONSTRUCTI ON & LAWN CARE SERVICE	76 PLEASANT STREET WELLSVILLE NY 14895	06/11/2013	06/11/2018
DOL	DOL		GEORGE DI BERNARDO		C/O DI BERNARDO TILE 15 WALKER WAYALBANY NY 12205	03/21/2014	03/21/2019
DOL	DA		GEORGE LUCEY		150 KINGS STREET BROOKLYN NY 11231	01/19/1998	01/19/2998
DOL	DOL	*****1075	GLOBAL TANK CONSTRUCTION LLC		P O BOX 1238 SALINA OK 74365	11/28/2012	11/28/2017
DOL	DOL	*****0878	GM CONSTRUCTION & LAWN CARE SERVICE		76 PLEASANT STREET WELLSVILLE NY 14895	06/11/2013	06/11/2018
DOL	DOL	*****5674	GMDV TRANS INC		67-48 182ND STREET FRESH MEADOWS NY 11365	06/24/2016	06/24/2021
DOL	DOL	*****0090	GOLDS FLOORING INSTALLATIONS INC		25 HAMILTON ROAD MONTICELLO NY 12701	10/16/2013	10/16/2018
DOL	DOL		GREGORY A FUCCI		C/O PAF PAINTING SERVICES 157 TIBBETTS ROADYONKERS NY 10705	03/12/2014	03/12/2019
DOL	DOL		GREGORY FUCCI JR		C/O APOLLO CONSTRUCTION 157 TIBBETTS ROADYONKERS NY 10705	03/12/2014	03/12/2019
DOL	DOL	*****9456	GUILLO CONTRACTING CORP		P O BOX 229 CALVERTON NY 11933	07/08/2013	07/08/2018
DOL	DOL		GUS PAPASTEFANOU		C/O D & G PAINTING & DECO 53 LITTLE COLLABAR ROADMONTGOMERY NY 12549	04/19/2012	04/19/2017
DOL	NYC	*****0346	H N H CONTRACTORS CORP		4558 BROADWAY # 6 NEW YORK NY 10040	08/04/2014	08/04/2019
DOL	DOL		HALSSAM FOSTOK		5 HANSEN PLACE WAYNE NJ 07470	09/18/2013	09/18/2018
DOL	NYC		HAMEEDUL HASAN		240 HOME STREET TEANECK NJ 07666	08/04/2014	08/04/2019
DOL	AG	*****9918	HARA ELECTRIC CORP		2461 47TH STREET ASTORIA NY 11103	09/26/2013	09/26/2018
DOL	NYC		HARMEL SINGH		15 CLINTON LANE HICKSVILLE NY 11801	02/25/2016	02/25/2021
DOL	NYC		HAROLD KUEMMEL		58-83 54TH STREET MASPETH NY 11378	02/26/2016	02/26/2021
DOL	AG		HARVINDER SINGH PAUL		90 JUNIUS STREET BROOKLYN NY 11212	01/23/2014	01/23/2019
DOL	DOL		HENRY VAN DALRYMPLE		2663 LANTERN LANE ATLANTA GA 30349	12/01/2015	12/01/2020
DOL	DOL		HI-TECH CONTRACTING CORP		114 PEARL STREET PORT CHESTER NY 10573	08/15/2012	08/15/2017
DOL	DOL	*****6370	HILLIANO CONSTRUCTION & ELECTRICAL INC		354 MAGNOLIA STREET ROCHESTER NY 14611	01/22/2015	01/22/2020
DOL	DOL	*****8282	IDEMA DEVELOPMENT INC		91 COLLEGE AVENUE POUGHKEEPSIE NY 12603	12/04/2015	12/04/2020
DOL	DOL	*****8282	IDEMA GENERAL CONTRACTORS INC		91 COLLEGE AVENUE POUGHKEEPSIE NY 12603	12/04/2015	12/04/2020
DOL	DOL	*****8426	IMPERIAL MASONRY RESTORATION INC		141 ARGONNE DRIVE KENMORE NY 14217	10/03/2012	10/03/2017
DOL	DOL	*****7001	INTEGRATED CONSTRUCTION & POWER SYSTEMS INC		SUITE 100 2105 W GENESEE STREETSYRACUSE NY 13219	01/06/2016	01/06/2021
DOL	DOL		ISABEL FRAGA		C/O THREE FRIENDS CONSTR 986 MADISON AVENUEPATERSON NJ 07501	01/03/2013	01/03/2018
DOL	AG	*****0000	J A M CONSTRUCTION CORP		SUITE 125 265 SUNRISE HIGHWAYROCKVILLE CENTRE NY 10457	04/07/2016	04/07/2021

DOL	DOL	*****7598	J M RICH LLC		P O BOX 268 STILLWATER NY 12170	09/16/2013	03/21/2019
DOL	DOL	*****3478	J N P CONSTRUCTION CORP		50 LOUIS COURT P O BOX 1907SOUTH HACKENSACK NY 07606	03/21/2014	03/21/2019
DOL	DOL		J N RICH LLC		P O BOX 268 STILLWATER NY 12170	09/16/2013	03/21/2019
DOL	DOL	*****9368	J TECH CONSTRUCTION		PO BOX 64782 ROCHESTER NY 14624	09/24/2012	09/24/2017
DOL	DOL		J THE HANDYMAN			09/24/2012	09/24/2017
DOL	DOL	*****4910	J V MAGIC TOUCH CORPORATION		94-25 57TH AVENUE, APT 5G ELMHURST NY 11373	01/12/2015	01/12/2020
DOL	DOL		JACQUELINE HOWE		C/O FLOZ-ON PAINTING INC 12 DUNDERBERG ROADTOMKINS NY 10986	10/16/2013	10/16/2018
DOL	DOL	*****8627	JAG I LLC		635 LUZERNE ROAD QUEENSBURY NY 12804	09/16/2013	09/16/2018
DOL	DOL	*****2868	JAG INDUSTRIES INC		175 BROAD ST - SUITE 320 GLENS FALLS NY 12801	09/16/2013	09/16/2018
DOL	DOL		JAMES B RHYNDERS		91 COLLEGE AVENUE POUGHKEEPSIE NY 12603	12/04/2015	12/04/2020
DOL	DOL		JAMES BOYCE		C/O EMPIRE CONCRETE SYST 101 SULLYS TRAIL/SUITE 20PITTSFORD NY 14534	11/18/2013	01/07/2019
DOL	DOL		JAMES E RHYNDERS		91 COLLEGE AVENUE POUGHKEEPSIE NY 12603	12/04/2015	12/04/2020
DOL	AG		JAMES FALCONE		SUITE 125 265 SUNRISE HIGHWAYROCKVILLE CENTRE NY 10457	04/07/2016	04/07/2021
DOL	DOL		JAMES RHYNDERS SR		91 COLLEGE AVENUE POUGHKEEPSIE NY 12603	12/04/2015	12/04/2020
DOL	DOL		JAMES SICKAU		3090 SHIRLEY ROAD NORTH COLLINS NY 14111	04/19/2011	07/08/2020
DOL	DOL		JASON M RICH		P O BOX 268 STILLWATER NY 12170	09/16/2013	03/21/2019
DOL	DOL		JASON W MILLIMAN		C/O ROCHESTER ACOUSTICAL P O BOX 799HILTON NY 14468	02/19/2016	02/19/2021
DOL	DOL		JAY PRESUTTI		C/O CONSOLIDATED INDUSTRI 2051 ROUTE 44/55MODENA NY 12548	01/28/2013	01/28/2018
DOL	DOL		JEFF P BRADLEY		520 PINE HILL ROAD CHESTER NY 10940	06/23/2014	06/23/2019
DOL	NYC		JEFFREY CASSIDY		14 RAILROAD AVENUE VALHALLA NY 10595	05/15/2014	04/02/2020
DOL	DOL		JERALD HOWE		C/O FLOZ-ON PAINTING INC 12 DUNDERBERG ROADTOMKINS NY 10986	10/16/2013	10/16/2018
DOL	DOL		JEROME LACITIGNOLA		C/O CATSKILL FENCE INSTAL 5445 ROUTE 32 CATSKILL NY 12414	08/22/2014	08/22/2019
DOL	NYC		JERRY DEWATERS		30 COLUMBUS CIRCLE EASTCHESTER NY 10709	08/21/2012	08/21/2017
DOL	DOL		JESSICA WHITESIDE		C/O BRRESTORATION NY INC 140 ARCADIA AVENUEOSWEGO NY 13126	09/12/2016	09/12/2021
DOL	DOL		JOHN CATONE		C/O CATONE CONSTRUCTION 294 ALPINE ROADROCHESTER NY 14612	03/09/2012	03/09/2017
DOL	DOL		JOHN DESCUL		437 SUNRISE HIGHWAYA WEST BABYLON NY 11704	08/12/2013	08/12/2018
DOL	DOL		JOHN H LEE	JOHN LEE QUALITY PAVING	67 WILER ROAD HILTON NY 14468	01/28/2013	01/28/2018
DOL	DOL	*****1749	JOHN LEE QUALITY PAVING		67 WILER ROAD HILTON NY 14468	01/28/2013	01/28/2018
DOL	DOL		JON E DEYOUNG		261 MILL ROAD P O BOX 296EAST AURORA NY 14052	07/29/2015	07/29/2020
DOL	DOL	*****9368	JORGE I DELEON	J TECH CONSTRUCTI ON	PO BOX 64782 ROCHESTER NY 14624	09/24/2012	09/24/2017
DOL	DOL		JORGE VILLALOBOS		94-25 57TH AVENUE - APT 5 ELMHURST NY 11373	01/12/2015	01/12/2020
DOL	DOL		JOSE MONTAS		27 BUTLER PLACE YONKERS NY 10710	03/18/2011	03/19/2020

DOL	AG		JOSEPH FALCONE		SUITE 125 265 SUNRISE HIGHWAYROCKVILLE CENTRE NY 10457	04/07/2016	04/07/2021
DOL	DOL		JOSEPH MARTONE		112 OSCAWANA HEIGHTS ROAD PUTNAM VALLEY NY 10542	08/27/2013	08/27/2018
DOL	DOL		JOSHUA DEBOWSKY		9547 BUSTLETON AVENUE PHILADELPHIA PA 19115	02/05/2014	02/05/2019
DOL	DOL		JOYA MUSCOLINO		10 ST CHARLES STREET THORNWOOD NY 10594	09/03/2013	09/03/2018
DOL	DOL		JUANA MARTINEZ		C/O LEAD CONSTRUCTION 27 BUTLER PLACEYONKERS NY 10710	03/19/2015	03/19/2020
DOL	DOL	*****4340	JUBCO SITE DEVELOPMENT LLC		462 LAKEVIEW AVENUE VALHALLA NY 10595	12/16/2013	12/16/2018
DOL	DOL		JULIUS AND GITA BEHREND		5 EMES LANE MONSEY NY 10952	11/20/2002	11/20/3002
DOL	DOL		KAREN HARTMAN		C/O GUILLO CONTRACTING P O BOX 229CALVERTON NY 11933	07/08/2013	07/08/2018
DOL	NYC		KATHLEEN SELA	C/O COLONIAL ROOFING COMPANY INC	247 48TH STREET BROOKLYN NY 11220	02/05/2014	02/05/2019
DOL	DOL		KEITH SCHEPIS		C/O KJS HAULING AND HOME 95 MAPLE AVENUENEW CITY NY 10956	04/15/2013	04/15/2018
DOL	DOL		KEN DEAVER		731 WARWICK TURNPIKE HEWITT NJ 07421	06/25/2012	12/11/2017
DOL	DOL	*****9732	KENT HOLLOW SIDING LLC		29A BRIDGE STREET NEW MILFORD CT 06776	01/15/2016	01/15/2021
DOL	DOL		KEVIN BABCOCK JR		P O BOX 46 THOMPSON RIDGE NY 10985	08/22/2014	08/22/2019
DOL	DOL		KEVIN M BABCOCK		P O BOX 46 THOMPSON RIDGE NY 10985	08/22/2014	08/22/2019
DOL	DOL		KIM SOROCENSKI		C/O SOLUTION MATTERS INC 198 NORWOOD ROADPORT JEFFERSON NY 11776	11/19/2015	11/19/2020
DOL	DOL	*****2463	KJS HAULING AND HOME IMPROVEMENT INC		95 MAPLE AVENUE NEW CITY NY 10956	04/15/2013	04/15/2018
DOL	AG		KOSTAS "GUS" ANDRIKOPOULOS		2461 47TH STREET ASTORIA NY 11103	09/26/2013	09/26/2018
DOL	DOL		KRZYSZTOF PRXYBYL		2 TINA LANE HOPEWELL JUNCTION NY 12533	01/06/2012	01/06/2017
DOL	DOL	*****6033	KUSNIR CONSTRUCTION		2677 ANAWALK ROAD KATONAH NY 10536	08/03/2012	08/03/2017
DOL	DA	*****8816	LAKE CONSTRUCTION AND DEVELOPMENT CORPORATION		150 KINGS STREET BROOKLYN NY 11231	08/19/1998	08/19/2998
DOL	DOL	*****6224	LAKESIDE FIRE SPRINKLERS LLC		125 CHAUTAUQUA AVENUE LAKEWOOD NY 14750	06/24/2015	06/24/2020
DOL	DOL		LARRY DOMINGUEZ		114 PEARL STREET PORT CHESTER NY 10573	08/15/2012	08/15/2017
DOL	DOL		LAURA A. GAUTHIER		C/O IMPERIAL MASONRY REST 141 ARGONNE DRIVEKENMORE NY 14217	10/03/2012	10/03/2017
DOL	DOL		LAURI MARTONE		112 OSCAWANA HEIGHTS ROAD PUTNAM VALLEY NY 10542	08/27/2013	08/27/2018
DOL	DOL		LAVERN GLAVE		C/O RAW POWER ELECTRIC 3 PARK CIRCLEMIDDLETOWN NY 10940	09/15/2014	09/15/2019
DOL	DOL		LAWRENCE J RUGGLES		P O BOX 371 ROUND LAKE NY 12151	05/12/2014	05/12/2019
DOL	DOL	*****1364	LEAD CONSTRUCTION SERVICES INC		3 ALAN B SHEPARD PLACE YONKERS NY 10705	03/19/2015	03/19/2020
DOL	DOL	*****0597	LEED INDUSTRIES CORP	HI-TECH CONTRACTIN G CORP	114 PEART STREET PORT CHESTER NY 10573	08/15/2012	08/15/2017
DOL	DOL	*****4388	LEN J CONSTRUCTION LLC		P O BOX 10007 ALBANY NY 12201	06/24/2016	06/24/2021
DOL	AG		LEONID FRIDMAN		APT 5 200 BRIGHTON, 15TH STBROOKLYN NY 11235	01/23/2014	01/23/2019
DOL	DOL		LEROY NELSON JR		C/O LEN J CONSTRUCTION LL P O BOX 10007ALBANY NY 12201	06/24/2016	06/24/2021

DOL	DOL		LINDSEY R CRILL		143 FILLMORE AVENUE BUFFALO NY 14210	01/08/2015	01/08/2020
DOL	DOL	*****8453	LINPHILL ELECTRICAL CONTRACTORS INC		523 SOUTH 10TH AVENUE MOUNT VERNON NY 10553	01/07/2011	04/15/2018
DOL	DOL		LINVAL BROWN		523 SOUTH 10TH AVENUE MOUNT VERNON NY 10553	01/07/2011	04/15/2018
DOL	NYC	*****2850	M A 2 FLAGS CONTRACTING CORP		25-18 100TH STREET EAST ELMHURST NY 11369	08/21/2013	08/21/2018
DOL	AG	*****6957	M B DIN CONSTRUCTION INC		8831 20TH AVENUE/SUITE 6E BROOKLYN NY 11214	11/17/2015	11/17/2020
DOL	NYC	*****6317	M S QUALITY CONSTRUCTION LLC		27 MAPLEWOOD AVENUE COLONIA NJ 07067	02/04/2015	02/04/2020
DOL	NYC		MACIEJ SONTOWSKI		27 MAPLEWOOD AVENUE COLONIA NJ 07067	02/04/2015	02/04/2020
DOL	NYC	*****9590	MACK GLASSNAUTH IRON WORKS INC		137 LIBERTY AVENUE BROOKLYN NY 11212	12/21/2015	12/21/2020
DOL	NYC	*****3141	MACKEY REED ELECTRIC INC		1ST FLOOR STORE FRONT 88-10 LITTLE NECK PARKWAYFLORAL PARK NY 11001	06/24/2014	06/24/2019
DOL	DOL	*****1784	MADISON AVE CONSTRUCTION CORP		39 PENNY STREET WEST ISLIP NY 11795	11/02/2016	11/02/2021
DOL	DOL		MALARKEY'S BAR & GRILL LLC		64 VICTORIA DRIVE BINGHAMTON NY 13904	02/04/2016	02/04/2021
DOL	DOL	*****0705	MALARKEY'S PUB & GRUB LLC		64 VICTORIA DRIVE BINGHAMTON NY 13904	02/04/2016	02/04/2021
DOL	DA		MANUEL P TOBIO		150 KINGS STREET BROOKLYN NY 14444	08/19/1998	08/19/2998
DOL	DA		MANUEL TOBIO		150 KINGS STREET BROOKLYN NY 11231	08/19/1998	08/19/2998
DOL	DOL		MAR CONTRACTING CORP		620 COMMERCE STREET THORNWOOD NY 10594	09/24/2012	09/24/2017
DOL	DOL		MARGARET FORTH		P O BOX 74 EAST GREENBUSH NY 12061	02/28/2012	10/01/2017
DOL	DOL		MARIA ESTEVES AKA MARIA MARTINS		C/O THREE FRIENDS CONSTR 986 MADISON AVENUEPATERSON NJ 07501	01/03/2013	01/03/2018
DOL	DOL		MARIA MARTINS AKA MARIA ESTEVES		C/O THREE FRIENDS CONSTR 986 MADISON AVENUEPATERSON NJ 07501	01/03/2013	01/03/2018
DOL	DOL		MARIACHI'S PIZZERIA		C/O DOUGLAS L MALARKEY 64 VICTORIA DRIVEBINGHAMTON NY 13904	02/04/2016	02/04/2021
DOL	DOL		MARIO LUIS		31 DURANT AVENUE BETHEL CT 06801	07/02/2012	07/02/2017
DOL	DOL		MARK MIONIS		6409 LAND O LAKES BLVD LAND O LAKES FL 34638	11/10/2015	11/10/2020
DOL	DOL	*****5533	MARQUISE CONSTRUCTION & DEVELOPMENT CORP		10 ST CHARLES STREET THORNWOOD NY 10594	09/03/2013	09/03/2018
DOL	DOL	*****8810	MARQUISE CONSTRUCTION ASSOCIATES INC		20 BOSWELL ROAD PUTNAM VALLEY NY 10579	09/03/2013	09/03/2018
DOL	DOL	*****1134	MARQUISE CONSTRUCTION CORP		10 ST CHARLES STREET THORNWOOD NY 10594	09/03/2013	09/03/2018
DOL	NYC	*****4314	MASCON RESTORATION INC		129-06 18TH AVENUE COLLEGE POINT NY 11356	02/09/2012	02/09/2017
DOL	NYC	*****4314	MASCON RESTORATION LLC		129-06 18TH AVENUE COLLEGE POINT NY 11356	02/09/2012	02/09/2017
DOL	DOL	*****0845	MASONRY CONSTRUCTION INC		442 ARMONK ROAD MOUNT KISCO NY 10549	12/04/2009	05/04/2017
DOL	DOL	*****3333	MASONRY INDUSTRIES INC		442 ARMONK ROAD MOUNT KISKO NY 10549	12/04/2009	05/04/2017
DOL	DOL		MATTHEW IDEMA GENERAL CONTRACTORS INC		91 COLLEGE AVENUE POUGHKEEPSIE NY 12603	12/04/2015	12/04/2020
DOL	DOL	*****6416	MCCALL MASONRY		P O BOX 304 SAYRE PA 18840	08/09/2016	08/09/2021
DOL	DOL	*****9028	MCINTOSH INTERIORS LLC		8531 AVENUE B BROOKLYN NY 11236	02/05/2013	02/05/2018
DOL	DOL	*****4259	MERCANDO CONTRACTING CO INC		134 MURRAY AVENUE YONKERS NY 10704	12/11/2009	02/03/2019
DOL	DOL	*****0327	MERCANDO INDUSTRIES LLC		134 MURRAY AVENUE YONKERS NY 10704	12/11/2009	02/03/2019
DOL	NYC	*****5330	METRO DUCT SYSTEMS INC		1219 ASTORIA BOULEVARD LONG ISLAND CITY NY 11102	04/16/2014	11/19/2020
DOL	DOL	*****3368	MICEK CONSTRUCTION CO INC		20 CROSS STREET FALCONER NY 14733	12/02/2014	12/02/2019

DOL	DOL		MICHAEL A PASCARELLA		SUITE 100 2105 WEST GENESEE STREET SYRACUSE NY 13219	01/06/2016	01/06/2021
DOL	DOL	*****9198	MICHAEL CZECHOWICZ	OCTAGON CO	37-11 35TH AVENUE-2ND FL LONG ISLAND CITY NY 11101	01/08/2013	01/08/2018
DOL	DOL		MICHAEL F LEARY JR		3813 SNOWDEN HILL ROADNEW HARTFORD NY 13413	06/19/2013	06/19/2018
DOL	DOL		MICHAEL F LEARY JR METAL STUD & DRYWALL		3813 SNOWDEN HILL ROAD NEW HARTFORD NY 13413	06/19/2013	06/19/2018
DOL	NYC		MICHAEL HIRSCH		C/O MZM CORP 163 S MAIN STREETNEW CITY NY 10956	01/28/2016	01/28/2021
DOL	DOL		MICHAEL KTISTAKIS		363 88TH STREET BROOKLYN NY 11209	11/18/2013	11/18/2018
DOL	DOL	*****6033	MICHAEL KUSNIR	KUSNIR CONSTRUCTI ON	2677 ANAWALK ROAD KATONAH NY 10536	08/03/2012	08/03/2017
DOL	DOL		MICHAEL MARGOLIN		4 LEGHORN COURT NEW YORK NY 11746	11/28/2012	11/28/2017
DOL	DOL		MICHAEL WILSON	WILSON BROTHER DRYWALL CONTRACTOR S	36 ABERSOLD STREET ROCHESTER NY 14621	08/31/2015	08/31/2020
DOL	DOL		MICHELLE L BARBER		635 LUZERNE ROAD QUEENSBURY NY 12804	09/16/2013	09/16/2018
DOL	NYC		MIGUEL ACOSTA		25-18 100TH STREET EAST ELMHURST NY 11369	08/21/2013	08/21/2018
DOL	NYC		MILANCE HADZIC		22 CALIFORNIA AVE - STE 1 PATERSON NJ 07503	03/11/2015	03/11/2020
DOL	AG		MOHAMMAD RIAZ		46 RUGBY ROAD WESTBURY NY 11590	11/20/2013	11/20/2018
DOL	AG		MOHAMMED N CHATHA		8831 20TH AVENUE/SUITE 6E BROOKLYN NY 11214	11/17/2015	11/17/2020
DOL	DOL	*****2737	MOUNTAIN'S AIR INC		2471 OCEAN AVENUE- STE 7A BROOKLYN NY 11229	09/24/2012	09/18/2020
DOL	DOL		MUHAMMAD PERVAIZ		C/O CHAMPION CONSTRUCTION 2131 SCHENECTADY AVENUEBROOKLYN NY 11234	11/18/2015	11/18/2020
DOL	NYC		MUHAMMAD ZULFIQAR		129-06 18TH AVENUE COLLEGE POINT NY 11356	02/09/2012	02/09/2017
DOL	DOL		MURRAY FORTH		P O BOX 74 EAST GREENBUSH NY 12061	02/28/2012	10/01/2017
DOL	DOL		MUZAFFAR HUSSAIN		C/O ABSOLUTE GENERAL CONT 1129 AVENUE UBROOKLYN NY 11229	01/28/2013	01/28/2018
DOL	NYC	*****3613	MZM CORP		163 S MAIN STREET NEW CITY NY 10956	01/28/2016	01/28/2021
DOL	NYC	*****1284	NEW AMERICAN RESTORATION INC		22 CALIFORNIA AVE - STE 1 PATERSON NJ 07503	03/11/2015	03/11/2020
DOL	DA	*****6988	NEW YORK INSULATION INC		58-48 59TH STREET MASPETH NY 11378	05/16/2012	05/08/2020
DOL	NYC	*****4839	NEW YORK RIGGING CORP		58-83 54TH STREET MASPETH NY 11378	02/26/2016	02/26/2021
DOL	DOL		NICHOLAS DEGREGORY JR	NJ DEGREGORY & COMPANY	1698 ROUTE 9 GLENS FALLS NY 12801	05/23/2013	05/23/2018
DOL	NYC		NICHOLAS PROVENZANO		147 BROOME AVENUE ATLANTIC BEACH NY 11509	03/03/2014	03/03/2019
DOL	NYC		NICHOLAS PROVENZANO		147 BROOME AVENUE ATLANTIC BEACH NY 11509	03/03/2014	03/03/2019
DOL	DOL	*****5279	NJ DEGREGORY & COMPANY		1698 ROUTE 9 GLENS FALLS NY 12801	05/23/2013	05/23/2018
DOL	DOL		NJ DEGREGORY & SONS CONSTRUCTION		1698 ROUTE 9 GLENS FALLS NY 12801	05/23/2013	05/23/2018
DOL	NYC	*****1968	NORTH AMERICAN IRON WORKS INC		1560 DECATUR STREET RIDGEWOOD NY 11385	05/15/2015	05/15/2020
DOL	DOL	*****6966	NORTH COUNTRY DRYWALL AND PAINT		23167 COUNTY ROUTE 59 DEXTER NY 13634	10/24/2016	10/24/2021
DOL	DOL	*****9198	OCTAGON CO		37-11 35TH AVENUE-2ND FL LONG ISLAND CITY NY 11101	01/08/2013	01/08/2018
DOL	DOL		OKBY ELSAYED		1541 EAST 56TH STREET BROOKLYN NY 11234	05/04/2012	05/04/2017
DOL	NYC	*****8337	OPTIMUM CONSTRUCTION INC		23-73 48TH STREET LONG ISLAND CITY NY 11103	04/24/2014	04/24/2019

DOL	NYC		ORSON ARROYO		C/O METRO DUCT SYSTEMS 12-19 ASTORIA BOULEVARDLONG ISLAND CITY NY 11102	04/16/2014	11/19/2020
DOL	DOL	*****4546	PAF PAINTING CORP		161 TIBBETTS ROAD YONKERS NY 10705	03/12/2014	03/12/2019
DOL	DOL	*****5242	PAF PAINTING SERVICES INC	GARDEN STATE PAINTING	157 TIBBETTS ROAD YONKERS NY 10103	03/12/2014	03/12/2019
DOL	DOL		PAF PAINTING SERVICES OF WESTCHESTER INC		C/O SPIEGEL & UTRERA 1 MAIDEN LANE - 5TH FLNEW YORK NY 10038	03/12/2014	03/12/2019
DOL	DOL	*****8802	PAT'S HEATING AND AIR CONDITIONING LTD		P O BOX 371 ROUND LAKE NY 12151	05/12/2014	05/12/2019
DOL	DOL		PATRICIA M RUGGLES		P O BOX 371 ROUND LAKE NY 12151	05/12/2014	05/12/2019
DOL	DOL		PAUL VERNA		C/O AMERICAN STEEL MECHA 693 PAINTER STREETMEDIA PA 19063	02/20/2013	02/20/2018
DOL	DOL	*****9569	PERFORM CONCRETE INC		31 DURANT AVENUE BETHEL CT 06801	07/02/2012	07/02/2017
DOL	NYC		PETER LUSTIG		30 COLUMBUS CIRCLE EASTCHESTER NY 10709	08/21/2012	08/21/2017
DOL	NYC		PETER TRITARIS		5990 58TH AVENUE MASPETH NY 11378	11/18/2013	11/18/2018
DOL	DOL	*****2989	PROFESSIONAL ESTIMATING & BUSINESS CORP		157 TIBBETS ROAD YONKERS NY 10705	03/12/2014	03/12/2019
DOL	DOL	*****6895	PROLINE CONCRETE OF WNY INC		3090 SHIRLEY ROAD NORTH COLLINS NY 14111	04/19/2011	07/08/2020
DOL	DA	*****6817	QUADRANT METAL BUILDINGS LLC		2740 SW MARTIN DOWNS BLVD PALM CITY FL 34990	08/25/2016	08/25/2021
DOL	DOL	*****0015	RAMADA CONSTRUCTION CORP		80 SAVO LOOP STATEN ISLAND NY 10309	01/07/2014	01/07/2019
DOL	NYC		RAMESHWAR ASU		137 LIBERTY AVENUE BROOKLYN NY 11212	12/21/2015	12/21/2020
DOL	DOL		RANA A KAHN		1973 81ST ST - SUITE A-5 BROOKLYN NY 11214	01/08/2015	01/08/2020
DOL	NYC		RANTIK PARIKH		13 LORIANN ROAD WARREN NJ 07059	07/15/2015	07/15/2020
DOL	DOL	*****2633	RAW POWER ELECTRIC CORP		3 PARK PLACE MIDDLETOWN NY 10940	09/16/2013	09/15/2019
DOL	NYC		RAYMOND PEARSON		P O BOX 957 PORT JEFFERSON STA NY 11776	03/12/2014	03/12/2019
DOL	DOL		REBECCA THORNE		113 N MAPLE AVENUE GREENSBURG PA 15601	02/21/2013	02/21/2018
DOL	DOL		REGINALD WARREN		C/O RAW POWER ELECTRIC 3 PARK CIRCLEMIDDLETOWN NY 10940	09/15/2014	09/15/2019
DOL	NYC	*****3461	RELIANCE GENERAL CONSTRUCTION INC		644 OCEAN PARKWAY BROOKLYN NY 11230	09/02/2015	09/02/2020
DOL	DOL		REVOLUTIONARY FLOORS LLC		P O BOX 268 STILLWATER NY 12170	09/16/2013	03/21/2019
DOL	DOL		RHINO CONCRETE LLC		101 SULLYS TRAIL/SUITE 20 PITTSFORD NY 14534	11/18/2013	01/07/2019
DOL	DA		RIANN MULLER		2740 SW MARTIN DOWNS BLVD PALM CITY FL 34990	08/25/2016	08/25/2021
DOL	DOL		RICHARD WILSON		C/O DUFOUR GROUP INC 353 WEST 56TH STREET #7MNEW YORK NY 10019	06/10/2014	06/10/2019
DOL	DOL	*****8618	RIEKS CONTRACTING LLC		4804 GAHWILER ROAD AUBURN NY 13021	05/01/2015	05/01/2020
DOL	DOL		ROBBYE BISSESAR		89-51 SPRINGFIELD BLVD QUEENS VILLAGE NY 11427	01/11/2003	01/11/3003
DOL	DOL	*****1855	ROBERT D BISHOP JR	ROBERT D BISHOP JR	P O BOX 112 MORRISSONVILLE NY 12962	07/15/2014	07/15/2019
DOL	DOL		ROBERT D BISHOP JR		P O BOX 112 MORRISONVILLE NY 12962	07/15/2014	07/15/2019
DOL	NYC		ROBERT GUIDO		3256 BRUNER AVENUE BRONX NY 10469	07/29/2014	07/29/2019
DOL	DOL		ROBERT L EVANS		128A NORTH STAMFORD ROAD STAMFORD CT 06903	05/23/2013	05/23/2018
DOL	DOL		ROBERT TORDELLA		125 CHAUTAUQUA AVENUE LAKEWOOD NY 14750	06/24/2015	06/24/2020

DOL	DOL		ROCCO ESPOSITO		C/O ROCMAR CONTRACTING CO 620 COMMERCE STREETTHORNWOOD NY 10594	09/24/2012	09/24/2017
DOL	DOL	*****3859	ROCHESTER ACOUSTICAL CORP		P O BOX 799 HILTON NY 14468	02/19/2016	02/19/2021
DOL	DOL		ROCMAR CONSTRUCTION CORP		620 COMMERCE STREET THORNWOOD NY 10594	09/24/2012	09/24/2017
DOL	DOL	*****7083	ROCMAR CONTRACTING CORP		620 COMMERCE STREET THORNWOOD NY 10594	09/24/2012	09/24/2017
DOL	NYC		RODNEY SCOTT		201 HEMPSTEAD AVENUE WEST HEMPSTEAD NY 11552	10/30/2015	10/30/2020
DOL	DOL		ROMEO WARREN		C/O RAW POWER ELECTR CORP 3 PARK PLACEMIDDLETOWN NY 10940	09/16/2013	09/15/2019
DOL	DOL		ROSEANNE CANTISANI		11 TATAMUCK ROAD POUND RIDGE NY 10576	05/04/2012	05/04/2017
DOL	DOL		ROSS J MUSCOLINO		10 ST CHARLES STREET THORNWOOD NY 10594	09/03/2013	09/03/2018
DOL	DOL		S & S ELECTRIC		235 BROADWAY SCHENECTADY NY 12306	06/19/2013	06/19/2018
DOL	NYC		SABIR MUHAMMED		SUITE B-8 782 PELHAM PARKWAY SOUTHBRONX NY 10462	04/21/2016	04/21/2021
DOL	NYC		SAEED HASAN		4558 BROADWAY #6 NEW YORK NY 10040	08/04/2014	08/04/2019
DOL	DOL	*****4923	SCHENLEY CONSTRUCTION INC		731 WARWICK TURNPIKE HEWITT NJ 07421	06/25/2012	12/11/2017
DOL	NYC	*****2117	SCOTT ELECTRICAL LLC		201 HEMPSTEAD AVENUE WEST HEMPSTEAD NY 11552	10/30/2015	10/30/2020
DOL	DOL		SCOTT LEONARD	GLOBAL TANK CONSTRUCTI ON LLC	P O BOX 1238 SALINA OK 74365	11/28/2012	11/28/2017
DOL	DOL		SEAKCO CONSTRUCTION COMPANY LLC		128A NORTH STAMFORD ROAD STAMFORD CT 06903	05/23/2013	05/23/2018
DOL	DOL	*****9030	SEAKCO NEW YORK LLC	SEAKCO CONSTRUCTI ON COMPANY	128A NORTH STAMFORD ROAD STAMFORD CT 06903	05/23/2013	05/23/2018
DOL	DOL		SEAN BURBAGE	C/O SEAN BURBAGE CORP	445 ROOSA GAP ROAD BLOOMINGBURG NY 12721	04/14/2014	04/14/2019
DOL	DOL	*****6586	SEAN BURBAGE CORP		445 ROOSA GAP ROAD BLOOMINGBURG NY 12721	04/14/2014	04/14/2019
DOL	NYC		SHAHZAD ALAM		21107 28TH AVE BAYSIDE NY 11360	07/02/2012	07/02/2017
DOL	DOL	*****6904	SIGNING STAR LIMITED LIABILITY COMPANY		5 HANSEN PLACE WAYNE NJ 07470	09/18/2013	09/18/2018
DOL	DOL	*****4025	SOLUTION MATTERS INC		198 NORWOOD ROAD PORT JEFFERSON NY 11776	11/19/2015	11/19/2020
DOL	DOL		SPASOJE DOBRIC		61 WILLET STREET - SUITE PASSAIC NJ 07055	07/09/2010	02/23/2017
DOL	NYC	*****4934	SPHINX CONTRACTING CORP		240 HOME STREET TEANECK NJ 07666	08/04/2014	08/04/2019
DOL	DOL		SPORTSCRAFTERS INC		113 N MAPLE AVENUE GREENSBURG PA 15601	02/21/2013	02/21/2018
DOL	DOL	*****3496	STAR INTERNATIONAL INC		89-51 SPRINGFIELD BLVD QUEENS VILLAGE NY 11427	08/11/2003	08/11/3003
DOL	DOL		STEPHEN BIANCHI		462 LAKEVIEW AVENUE VALHALLA NY 10595	12/16/2013	12/16/2018
DOL	DOL		STEPHEON SHELDON	FANTASTIC PAINTING	493 LANSING ROAD FULTONVILLE NY 12072	11/18/2013	11/18/2018
DOL	DOL		STEVEN P SUCATO		15-68 208TH STREET BAYSIDE NY 11360	06/23/2016	06/23/2021
DOL	DOL		STEVEN SAGGESE		3005 WYNSUM AVENUE MERRICK NY 11566	08/18/2014	08/18/2019
DOL	DOL		STUART CHAITIN		634 ROUTE 303 BLAUVET NY 10913	07/26/2012	11/19/2018
DOL	NYC	*****9432	SUBLINK LTD		346 THIRD AVENUE PELHAM NY 10803	11/19/2015	11/19/2020
DOL	DOL	*****3210	SUPER SWEEP	FMS	4 LEGHORN COURT NEW YORK NY 11746	11/28/2012	11/28/2017
DOL	DOL		SUZANNE G GOLD	C/O GOLDS FLOORING INSTALLATION S INC	25 HAMILTON ROAD MONTICELLO NY 12701	10/16/2013	10/16/2018

DOL	DOL	*****7441	T & T CONCRETE INC		2560 HAMBURG TURNPIKE P O BOX 367LACKAWANNA NY 14218	07/08/2015	07/08/2020
DOL	DOL	*****9676	T D CONTRACTORS CORP	T D CONTRACTOR S INC	113 N MAPLE AVENUE GREENSBURG PA 15601	02/21/2013	02/21/2018
DOL	DOL		T D CONTRACTORS INC		113 N MAPLE AVENUE GREENSBURG PA 15601	02/21/2013	02/21/2018
DOL	DOL		TAMMY LACITIGNOLA		C/O CATSKILL FENCE INSTAL 5445 ROUTE 32CATSKILL NY 12414	08/22/2014	08/22/2019
DOL	DOL	*****9852	TAP STEEL INC		ROUTE 26 3101 P O BOX 457CONSTABLEVILLE NY 13325	01/28/2016	01/28/2021
DOL	DOL		TECH-MECHANICAL FAB DC INC		5 PARKER AVENUE POUGHKEEPSIE NY 12601	03/25/2014	03/25/2019
DOL	DOL	*****0887	THE BRINSON PAINTING CORPORATION		72 TAUNTON PLACE BUFFALO NY 14216	04/14/2015	04/14/2020
DOL	DOL	*****8174	THE DALRYMPLE CORPORATION		UNIT 278 541 10TH STREET NWATLANTA GA 30318	12/01/2015	12/01/2020
DOL	DOL	*****8174	THE DALRYMPLE GROUP LLC		289 JONESBORO RD/ STE 216 MCDONOUGH GA 30253	12/01/2015	12/01/2020
DOL	DOL		THE THORNE GROUP INC		113 N MAPLE AVENUE GREENSBURG PA 15601	02/21/2013	02/21/2018
DOL	DOL	*****2070	THE UNIVERSAL GROUP OF NEW YORK INC		212 OXFORD WAY SCHENECTADY NY 12309	12/11/2012	09/16/2018
DOL	DOL	*****9243	THE WELCOME MAT PROPERTY MANAGEMENT LLC		P O BOX 268 STILLWATER NY 12170	09/16/2013	03/21/2019
DOL	DOL		THOMAS DESANTIS	DESANTIS ENTERPRISES	161 OSWEGO RIVER ROAD PHOENIX NY 13135	09/24/2013	11/18/2018
DOL	NYC		THOMAS SCARINCI		130-43 92ND AVENUE RICHMOND HILLS NY 11418	11/27/2013	11/27/2018
DOL	DOL	*****2734	THREE FRIENDS CONSTRUCTION CORP		986 MADISON AVENUE PATERSON NJ 07501	01/03/2013	01/03/2018
DOL	NYC	*****6253	THUNDER BROTHERS CORP		24 CONGRESS LANE SOUTH RIVER NJ 08882	05/01/2013	05/01/2018
DOL	DOL		TIMOTHY A PALUCK		C/O TAP STEEL INC RTE 26 3101/ P O BOX 457CONSTABLEVILLE NY 13325	01/28/2016	01/28/2021
DOL	DOL		TIMOTHY F BARBER		635 LUZERNE ROAD QUEENSBURY NY 12804	09/16/2013	09/16/2018
DOL	NYC	*****1523	TM MECHANICAL CORP		130-43 92ND AVENUE RICHMOND HILLS NY 11418	11/27/2013	11/27/2018
DOL	DOL	*****0600	TOMSON ALLOYS RECYCLING INC		143 FILLMORE AVENUE BUFFALO NY 14210	01/08/2015	01/08/2020
DOL	DOL	*****3453	TORCHIA'S HOME IMPROVEMENT		10153 ROBERTS RD SAUQUOIT NY 13456	08/09/2016	08/09/2021
DOL	DOL	*****8176	TOURO CONTRACTING CORP		1541 EAST 56TH STREET BROOKLYN NY 11234	05/04/2012	05/04/2017
DOL	DOL	*****6914	TRI-COUNTY RESTORATIONS & CONSTRUCTION INC		13 SUMMERSET DRIVE WALLKILL NY 12589	08/22/2014	08/22/2019
DOL	DOL		TRI-COUNTY RESTORATIONS INC		392 ROCK CUT ROAD WALDEN NY 12586	08/22/2014	08/22/2019
DOL	DOL		TROY D CLARKE	ADVANCED METALS	387 RIVERSIDE DRIVE JOHNSON CITY NY 13790	10/01/2012	10/01/2017
DOL	DOL	*****9407	TURBO GROUP INC		15-68 208TH STREET BAYSIDE NY 11360	06/23/2016	06/23/2021
DOL	AG	*****6490	UNIVERSAL STEEL FABRICATORS INC		90 JUNIUS STREET BROOKLYN NY 11212	01/23/2014	01/23/2019
DOL	NYC	*****7174	V&R CONTRACTING		P O BOX 957 PORT JEFFERSON STA NY 11776	03/12/2014	03/12/2019
DOL	NYC		VALERIE VISCONTI		346 THIRD AVENUE PELHAM NY 10803	11/19/2015	11/19/2020
DOL	NYC		VEAP SELA	C/O COLONIAL ROOFING COMPANY INC	247 48TH STREET BROOKLYN NY 11220	02/05/2014	02/05/2019
DOL	DOL	*****3270	VEZANDIO CONTRACTING CORP		530 BEECH STREET NEW HYDE PARK NY 11040	07/02/2012	07/02/2017
DOL	NYC		VICK CONSTRUCTION		21 DAREWOOD LANE VALLEY STREAM NY 11581	12/31/2013	12/31/2018
DOL	NYC		VICKRAM MANGRU	VICK CONSTRUCTI ON	21 DAREWOOD LANE VALLEY STREAM NY 11581	12/31/2013	12/31/2018

DOL	DOL		VICTOR ROTENBERG		C/O GMDV TRANS INC 67048 182ND STREETFRESH MEADOWS NY 11365	06/24/2016	06/24/2021
DOL	NYC		VINCENT PIZZITOLA		P O BOX 957 PORT JEFFERSON STA NY 11776	03/12/2014	03/12/2019
DOL	DOL		WAYNE LIVINGSTON JR	NORTH COUNTRY DRYWALL AND PAINT	23167 COUNTY ROUTE 59 DEXTER NY 13634	10/24/2016	10/24/2021
DOL	DOL		WESLEY J STAROBA		206 TALLY HO COURT SCHENECTADY NY 12303	06/19/2013	06/19/2018
DOL	DOL	*****0078	WESLEY J STAROBA INC	S & S ELECTRIC	235 BROADWAY SCHENECTADY NY 12306	06/19/2013	06/19/2018
DOL	DOL	*****7617	WHITE PLAINS CARPENTRY CORP		P O BOX 309 WHITE PLAINS NY 10603	12/04/2009	05/04/2017
DOL	DOL		WILLIAM CONKLIN		5 PARKER AVENUE POUGHKEEPSIE NY 12601	03/25/2014	03/25/2019
DOL	DOL		WILLIAM DEAK		C/O MADISON AVE CONSTR CO 39 PENNY STREETWEST ISLIP NY 11795	11/02/2016	11/02/2021
DOL	DOL		WILLIAM MAZZELLA		134 MURRAY AVENUE YONKERS NY 10704	02/03/2014	02/03/2019
DOL	DOL		WILLIAM THORNE		113 N MAPLE AVENUE GREENSBURG PA 15601	02/21/2013	02/21/2018
DOL	DOL		WILLIE BRINSON		72 TAUNTON PLACE BUFFALO NY 14216	04/14/2015	04/14/2020
DOL	DOL	*****6195	WILSON BROTHER DRYWALL CONTRACTORS		36 ABERSOLD STREET ROCHESTER NY 14621	08/31/2015	08/31/2020
DOL	DOL	*****7345	YES SERVICE AND REPAIRS CORPORATION		325 RABRO DRIVE - SUITE 1 HAUPPAUGE NY 11788	08/09/2016	08/09/2021
DOL	DOL		YURIY IVANIN		C/O MOUNTAIN'S AIR INC 2471 OCEAN AVENUE-STE 7ABROOKLYN NY 11229	09/24/2012	09/18/2020

SECTION 011100 - SUMMARY OF WORK

PART 1 - GENERAL

1.01 BRIEF PURPOSE OF PROJECT / GENERAL

A. The purpose of the project is to furnish and install approximately 3,100 linear feet of new 8-inch water main, including appurtenances and fire hydrants, for the proposed Old Orchard Subdivision located in Riverhead, New York.

B. All work shown and specified in the Contract Documents shall be the work of this Construction Contract. The Owner does not anticipate awarding other prime contracts for the project as shown.

C. This Section provides an abbreviated summary of the work for the Construction Contract associated with the Owner's program to construct the project.

1.02 NOMENCLATURE

A. Where the terms "Engineer/Architect", "Architect/Engineer", "Engineer", or "Architect" are used throughout these Contract Documents, they shall mean the firm of H2M architects + engineers as may be abbreviated by H2M or H2M Group.

B. The terms "Contractor" and/or "Prime Contractor" where used shall refer to the individual or company who has entered into an agreement with the Owner to perform the work contained within these Contract Documents. The lack of word capitalization shall be incidental.

C. The CONTRACTOR may be referred to as the "General Contractor", "Prime Contractor" or similar wording. The lack of word capitalization shall be incidental.

1.03 ABBREVIATED SUMMARY OF WORK

A. Furnish all labor, equipment, materials, tools, means, methods, and incidentals necessary to complete the Work as required by the Contract Documents for this Construction Contract. The contractor shall coordinate, through the Owner/Engineer, the work of their contract with any work by others.

B. This following abbreviated summary is provided in order to briefly describe the work covered by the Contract Documents for this Construction Contract. It is not all inclusive of the work under the Contract.

C. The work includes, but is not limited to, the following:
   1. All labor, equipment and material costs necessary to complete the work as shown on the plan sheets.
   2. Project closeout submittals.

D. All other work shown and specified in the Contract Documents.

1.04 PARTIAL LISTING OF SPECIFIC CONTRACT REQUIREMENTS

A. The Contract Documents detail the work included in the Contract. Related requirements and conditions covered by the Contract Documents include, but are not limited to, the following:
   1. Securing road permits from the Town of Riverhead and the New York State DOT (if necessary).
   2. Guidelines and requirements of the New York State Department of Environmental Conservation (NYSDEC).

3. Guidelines and requirements of the local Health Department.
4. Local laws and ordinances of the County of Suffolk, Town of Riverhead and the Riverhead Water District.

1.05 PARTIAL LISTING OF OVERALL CONTRACT REQUIREMENTS

A. The Contract Documents detail the work included in the Contract. Related requirements and conditions covered by the Contract Documents include, but is not limited to, the following:
   1. Debris removal and daily and final cleaning up.
   2. Coordination with the Water District and local consumers regarding the interruption of water service and subsequent shut-downs of existing water mains.
   3. Coordination with utility companies necessary to schedule repairs to services in the event of damage to existing facilities.
   4. Site utilization and management so as not to disrupt the Owner's ability to operate the existing facilities in a safe and efficient manner.
   5. Site safety in accordance with all applicable federal, state, and local regulations.
   6. To not hinder the Owner's ability to deliver a safe and potable water supply.

1.06 EXISTING CONDITIONS

A. The Drawings show certain information that has been obtained by the Owner regarding various pipelines, structures, and utilities that exist at the location of the project both below and at grade.

B. The Owner and the Engineer expressly disclaims all responsibility for the accuracy or completeness of the information given on the Drawings with regard to existing facilities.

C. In the case where the Contractor discovers an obstruction not indicated on the Drawings or not described via specification reference, then the Contractor shall immediately notify the Engineer of the obstructions' existence.

D. The Engineer will determine if the obstruction is to be relocated or removed.

E. Compensation for this extra work will be paid for in accordance with the provisions in the Contract for "Extra Work".

PART 2 - PRODUCTS

NOT USED

PART 3 - EXECUTION

NOT USED

END OF SECTION

SECTION 011400 - WORK RESTRICTIONS

PART 1 - GENERAL

1.01 SECTION INCLUDES

A. Site access and control of areas outside of site.

B. Contractor use of the premises.

C. Contractor storage, parking and deliveries.

D. Work hours, employee conduct and miscellaneous employee requirements.

E. Contract requirements related to maintaining Owner's current operations and excess inspection required.

F. Suggested construction sequence.

1.02 SITE ACCESS AND CONTROL

A. The Contractor shall use the designated entrance to the site as shown on the drawings. If no site entrance is designated, the Contractor shall use an entrance designated by the Owner's Construction Representative.
   1. The Owner may permit, solely at the Owner's discretion, the temporary use of another entrance for site access.
   2. The Owner will only review requests made by the Contractor for an exception to the designated site entrance if made in writing at least 72 hours in advance of each of the times desired for use.

B. The Contractor is to maintain the entrance area clear of materials, vehicles and any other obstacle or debris. Failure to do so will result in a minimum back charge of $750 per occurrence.

C. The area around the site is a residential neighborhood. The Owner intends to be a good neighbor. The Contractor shall not close any road for any period in time. The Contractor shall take whatever measures are necessary to not cause any inconvenience to the area's residents.

D. The Contractor is responsible to employ methods to prevent construction materials and/or debris from leaving the site. The Contractor is responsible to routinely monitor the areas surrounding the site during the day as well as at the end of the work-day and to immediately clean up any area to its previous condition.

E. The Contractor shall employ methods to prevent the transmission of dirt from vehicles driving on exposed areas of the site from reaching the surrounding roadways. The Contractor will be responsible to immediately clean the roadway, should the measures being taken by the Contractor not satisfactorily control the transmission of any dirt to the roadway.

F. Any damages to areas outside the site, spills of soil, liquid, or any other material shall immediately be repaired, cleaned and restored to its previous condition.

G. The Contractor shall comply with all state and local requirements for allowable weight limits of vehicleson all roads.

H. The Owner reserves the right to back charge the Contractor for all costs associated with maintaining the grounds as well as maintaining areas outside the site, which may be disturbed

by the Contractor should the Contractor fail to maintain or repair the aforementioned in a condition acceptable to the Owner.

1.03 WORK HOURS, EMPLOYEE CONDUCT AND MISCELLANEOUS EMPLOYEE REQUIREMENTS

A. The Contractor will be permitted to schedule working days and hours as specified in the General Terms and Conditions, if no times are specified therein then the work hours shall be Monday - Friday 8:00 am - 4:00 pm.

B. Employees are to act in a professional manner. Any employee using inappropriate language or who is disruptive to the work environment will be banned from the site.

C. Proper work attire is required. Shirts are to be worn at all times and no short pants are permitted.

D. Employees shall not converse with local residents or Owner's employees.

E. Any employee found under the influence of any drug or alcohol will be banned from the site.

1.04 CONTRACT REQUIREMENTS RELATED TO MAINTAINING OWNER'S CURRENT OPERATIONS AND EXCESS INSPECTION REQUIRED

A. The Contractor shall schedule working days and hours as specified. The Contractor shall pay all excess costs for inspection services provided by the Owner/Engineer for working beyond the times specified.

B. The Contractor will be allowed to work early morning hours if a planned tie-in must be performed. Early morning work is required since it is a low flow period. Provide 72 hours advanced notice to the Engineer for all early morning work together with a written plan as to the steps necessary to construct the work. The overtime salary costs for early morning tie-in work associated with having the operations staff of the treatment facility present shall be paid by the Contractor.

1.05 SUGGESTED CONSTRUCTION SEQUENCE

A. The following is one suggested general, not all-inclusive, sequence of construction that may be used to complete all the work under the Contract within the time specified.

B. Work restrictions may be noted throughout the suggested sequence provided below. The Contractor shall comply with all noted work restrictions that appear.

C. The following suggested sequence is provided for information only:

PART 2 - PRODUCTS

NOT USED

PART 3 - EXECUTION

NOT USED

END OF SECTION

SECTION 012200 - UNIT PRICES

PART 1 - GENERAL

1.01 DESCRIPTION

A. This Section specifies the requirements for measurements and records made for payment purposes and describes the item(s) under which payment(s) will be made for the Work performed under this Contract.

B. All work shown or specified in the Contract Documents shall be performed.

C. Items not specified to be measured or paid for (for which no specific pay item exists in the Price Schedule) shall be included in an appropriate unit price item or in a lump-sum item.

D. Comply with the requirements pertaining to the restoration of all surfaces, which may or may not be paid for under a separate unit price item, and which shall be restored to a condition equal to or better than that existed prior to work starting under this contract.

1.02 MEASUREMENT REQUIREMENTS

A. All required measurements shall be made by the Contractor with the Engineer.

B. Any measurements not witnessed by Engineer and which cannot be verified or substantiated by Engineer will not be approved and payment under the item(s) requiring such measurements will not be made.

C. Coordinate measurements monthly, for the preparation of periodic pay estimates.

D. Where payments will be made for removing rock and existing materials, notify Engineer so that he may witness the measurements.
   1. All materials removed without conforming to the above procedures, which Engineer cannot verify or substantiate, will not be paid for.
   2. Maintain complete, neat, clean, and legible field notes for all measured items.
   3. The Engineer's signature shall not be constituted as an acceptance of the work, or the measurements made, but shall mean that he was present when the measurements were made.

1.03 SUBMITTALS

A. Field notes of all measurements for payment purposes delivered to Engineer daily.

1.04 SCHEDULING

A. Notify Engineer, as far in advance as possible, of the recording of measurements so that Engineer may observe existing conditions, work being performed, and measurements being made.

B. Allow for and afford Engineer ample time, space, and equipment to observe measurements and to verify measurements and elevations.

PART 2 - PRODUCTS

2.01 GENERAL

A. Provide all labor, materials, facilities, levels, measuring devices and all other equipment and items necessary to properly and accurately perform all measurements for payment purposes.

B. Payment for certain items not specifically listed in the bid forms but otherwise required by the technical specifications shall be deemed included as part of the General Conditions and the individual unit price and lump sum bid items provided for in the proposal.

PART 3 - EXECUTION

3.01 GENERAL

A. Perform all measuring required under this Section.

B. The following summary lists pay items which are commonly used for projects involving the installation of water mains and appurtenances and may or may not apply to this project. Required pay items are as listed within the proposal documents and no payment will be made under any item that is not included within the proposal pages unless specifically approved by the District and Engineer in the form of a Change Order.

ITEM NO.	ITEM DESCRIPTION AND MEASUREMENTS
1A	4” & 6” Cement-Lined Ductile Iron Water Main - Measure the actual horizontally projected length of 4” & 6” pipe installed as indicated on the Contract Drawings and Specifications. Measurement shall be made along the centerline of the pipe with no deductions made for fittings or valves
1B	8” Cement-Lined Ductile Iron Water Main - Measure the actual horizontally projected length of 8”pipe installed as indicated on the Contract Drawings and Specifications. Measurement shall be made along the centerline of the pipe with no deductions made for fittings or valves.
1C	10” Cement-Lined Ductile Iron Water Main - Measure the actual horizontally projected length of 10” pipe installed as indicated on the Contract Drawings and Specifications. Measurement shall be made along the centerline of the pipe with no deductions made for fittings or valves.
1D	12” Cement-Lined Ductile Iron Water Main - Measure the actual horizontally projected length of 12” pipe installed as indicated on the Contract Drawings and Specifications. Measurement shall be made along the centerline of the pipe with no deductions made for fittings or valves.
1E	16” Cement-Lined Ductile Iron Water Main - Measure the actual horizontally projected length of 16” pipe installed as indicated on the Contract Drawings and Specifications. Measurement shall be made along the centerline of the pipe with no deductions made for fittings or valves.
1F	20” Cement-Lined Ductile Iron Water Main - Measure the actual horizontally projected length of 20” pipe installed as indicated on the Contract Drawings and Specifications. Measurement shall be made along the centerline of the pipe with no deductions made for fittings or valves.

ITEM NO.	ITEM DESCRIPTION AND MEASUREMENTS
2	Cement-Lined Ductile Iron Fittings (Special Castings) - Record the actual size and number of tees, crosses, bends, sleeves, plugs, caps, reducers and offsets fittings installed. Payment shall be based on the actual weight of the fitting used whether it be compact (C153) of Full-Bodied (C110).
3A	6” Buried Mechanical Joint Gate Valve w/ Box - Count the actual number of 6” gate valves with boxes installed.
3B	8” Buried Mechanical Joint Gate Valve w/ Box - Count the actual number of 8” gate valves with boxes installed
3C	10” Buried Mechanical Joint Gate Valve w/ Box - Count the actual number of 10” gate valves with boxes installed.
3D	12” Buried Mechanical Joint Gate Valve w/ Box - Count the actual number of 12” gate valves with boxes installed.
4A	Install New Fire Hydrant Assemblies - Count the actual number of hydrant assemblies installed.
4B	Relocate Existing Fire Hydrant Assemblies - Count the actual number of hydrant assemblies relocated.
4C	Install Hydrant Protector Post - Count the actual number of hydrant protector posts installed.
4D	Remove Existing Fire Hydrant Assemblies - Count the actual number of hydrant assemblies removed.
5	Chlorination of Mains - Measure the actual horizontally projected length of new water main installed. Measurement shall be made along the centerline of the pipe with no deductions made for fittings or valves.
6	Additional Excavation - Measure the length, width and depth of excavation where additional material is removed. Dump tickets will be required.
6U	Removal of Unsuitable Material - Measure the length, width and depth of excavation where unsuitable material is encountered and removed. Limits of material removed shall be as directed by Engineer. Dump tickets will be required.
7	Blow-Off Assemblies - Count the actual number of blow-off assemblies installed.
8A	Connection to Existing 4” or 6” Water Main - Count the number of connections to existing 4” or 6” water mains made.
8B	Connection to Existing 8” Water Main - Count the number of connections to existing 8” water mains made.
8C	Connection to Existing 10” Water Main - Count the number of connections to existing 10” water mains made.
8D	Connection to Existing 12” Water Main - Count the number of connections to existing 12” water mains made.
8E	Connection to Existing 16” Water Main - Count the number of connections to existing 16” water mains made.
9	Trench Compaction - Measure the actual horizontally projected length of new water main installed excluding areas of jacking, pushing, tunneling or drilling. Measurement shall be made along the centerline of the pipe with no deductions made for fittings or valves.
9B	Trench Stabilization - Measure the length of trench requiring stabilization. Measurement shall be made along the centerline of the trench.
9CB	Furnish & Install Cementitious Backfill - Measure the length, width and depth of excavations requiring the placement of cementitious backfill. Delivery tickets will be required.

ITEM NO.	ITEM DESCRIPTION AND MEASUREMENTS
9CF	Furnish & Install Clean Fill - Measure the length, width and depth of excavations requiring the placement of clean-fill. Delivery tickets will be required
10A	Bituminous Concrete Pavement (Town & Village Roadways) - Measure the square yards of bituminous pavement placed.
10M	Bituminous Concrete Pavement (Milling and Resurfacing) - Measure the square yards of bituminous pavement milled and placed.
11A	Composite Pavement (State Roadways) - Measure the square yards of composite or concrete pavement placed
11B	Bituminous Concrete Pavement (State Travel Lanes) - Measure the square yards of bituminous pavement placed within the travel lanes of New York State roadways
11C	Bituminous Concrete Pavement (State Shoulder Areas) - Measure the square yards of bituminous pavement placed within the shoulder areas of New York State roadways.
12	Bituminous Concrete Pavement (County Roadways) - Measure the square yards of bituminous pavement placed.
13	Jacking of Steel Casing - Lump Sum - No measurement required.
13DD	Directional Drilling of PE Piping - Lump Sum - No measurement required.
14	Topsoil, Seeding & Sod - Measure the linear footage of areas disturbed during pipe installation and restored with topsoil and seed/sod.
15	Cement Concrete Traffic Island - Measure the square footage of cement concrete panel constructed.
15A	Cement Concrete Sidewalk - Measure the square footage of cement concrete sidewalk constructed.
15B	Cement Concrete Driveway Aprons - Measure the square footage of cement concrete driveway aprons constructed.
15C	Cement Concrete Curb - Measure the linear footage of cement concrete curb constructed.
22	Furnish & Install Polyethylene Pipe Wrap - Measure the linear feet of water main installed with a polyethylene pipe wrap.
23	Rock & Masonry Excavation - Measure the cubic yards of material removed. Dump tickets will be required.
26A	Moving Fee - Lump Sum - No measurement required.
28	Installation of new precast concrete vault, 8-inch pressure reducing valve, piping and fittings inside new vault, aluminum access ladder and heavy duty vault access manhole and cover
29	Temporary Bituminous Pavement - Measure the linear footage of temporary bituminous pavement installed.
30A	1” Copper Water Service Lines - Count the number of 1” copper water services installed.
30B	1-1/2” Copper Water Service Lines - Count the number of 1-1/2” copper water services installed.

ITEM NO.	ITEM DESCRIPTION AND MEASUREMENTS
30C	2” Copper Water Service Lines - Count the number of 2” copper water services installed.
30R	Reconnection of Existing Copper Water Service Lines - Count the number of copper water services reconnected to new mains.
30X	Abandonment of existing water service line - Count the number of service lines abandoned.

ITEM NO.	ITEM DESCRIPTION AND MEASUREMENTS
35	Maintenance & Protection of Traffic- Lump Sum - No measurement required.
38A	16” Buried Mechanical Joint Butterfly Valve w/ Box - Count the actual number of 16” butterfly valves with boxes installed.
38B	20” Buried Mechanical Joint Butterfly Valve w/ Box - Count the actual number of 16” butterfly valves with boxes installed.
422L	Traffic Detector Loops- Lump Sum - No measurement required.

PART 4 - PAYMENTS

4.01 GENERAL REQUIREMENTS AND STIPULATIONS

A. No separate payments will be made for the Work under this Contract except for the pay items stipulated in this Part 4.

B. All costs in connection with the Work shall be included in one or more of the pay items, as appropriated.

C. Each pay item shall be full compensation for all costs in connection with the item including, but not limited to:
   1. the furnishing of all materials, labor, equipment, tools, and all incidentals,
   2. the installation of all materials, equipment, facilities, accessories and appurtenant items,
   3. proper share of overhead and profit,
   4. mobilization/demobilization,
   5. submittals,
   6. General and Supplemental Conditions,
   7. restoration of surfaces not scheduled to be paid for by bid items
   8. all related and incidental work and items necessary or required to complete the Work and to provide completely connected, operational and approved systems capable of performing as required.

D. In addition to those items described above, Paragraph 4.02 lists specific items of work under each pay item to assist Contractor in appropriating the costs to the proper pay item.

4.02 PAY ITEMS

A. The name of the following pay item is the abbreviated form of the Bid Item as contained on the Price Schedule in the Bid Forms. The name, as shown below or on the Bid Form, shall not be construed to represent a complete description of all or the Work included under such time as is provided only as a means of identification and for ease of conversation.

ITEM NO.	PAYMENT
1	4” - 20” Cement-Lined Ductile Iron Water Main - Payment shall be made at the unit price bid per linear foot of water main installed completed and accepted. Include costs for pipe, pipe materials, gaskets, bronze wedges, pipe installation, excavation and backfill, pipe leakage testing, sheeting and bracing and as indicated on plans and in specifications and all work incidental thereto and necessary therefore.

ITEM NO.	PAYMENT
2	Cement-Lined Ductile Iron Fittings (Special Castings) - Payment shall be made at the unit price bid per pound of special castings installed, blocked and accepted complete. Include costs for transporting, setting, leveling and all labor, materials, tools and equipment and all else necessary therefore and incidental thereto. Payment weights shall be as listed on the appropriate submittals or as listed in the manufacturer's catalog. Payment will not be made for temporary caps or plugs
3	6” - 12” Buried Mechanical Joint Gate Valve w/ Box - Payment shall be made at the unit price for each gate valve and box installed and accepted. Include costs for all labor, equipment, materials, excavation and backfill and all work incidental thereto and necessary therefore.
4	Hydrant Assemblies - Payment shall be made at the unit price for each hydrant installed, removed or relocated and accepted. Include costs for all labor, equipment, materials including blocking, steel tie rods and gravel, excavation and backfill and all work incidental thereto and necessary therefore.
5	Chlorination of Mains - Payment shall be made at the unit price for each linear foot of new piping installed. Include costs for all labor, equipment, materials, testing, sampling and all work incidental thereto and necessary therefore.
6	Additional Excavation/Removal of Unsuitable Materials - Payment will be made for the actual amount of cubic yards of excess fill or unsuitable materials removed. Under this contract new mains shall be installed to provide depth of cover between 4'-6" and 5'-0" for the entire contract and, if ordered by the Engineer, a cover up to 6'-6" for short intervals not exceeding 40 feet in length at each location where additional depth is required to pass under drainage, utilities, etc. When the length exceeds 40 feet at each location where additional depth is required to pass under drainage, utilities, etc., the first 20 feet on each end of the run with additional depth shall be excluded from payment under Item 6.
7	Permanent Blow-off Assemblies - Payment shall be made at the unit price for each blow-off assembly installed and accepted. Include costs for all labor, equipment, materials including blocking, gravel, excavation and backfill and all work incidental thereto and necessary therefore.
8	Connection to Existing Water Mains - Payment will be made for the actual number of cut-ins to existing water mains made. Payment shall include the cost of spool piping used at the connection, on the run of existing water main. Payment will not be made where a plug or cap is removed to facilitate connection.
9	Trench Compaction - Payment will be made for the actual linear footage of new water mains installed, excluding areas of pipe jacking, drilling or other means of trenchless construction are utilized.
9B	Trench Stabilization - Payment will be made for the actual linear footage of trench that required stabilization, as deemed necessary by the Engineer and/or District.
9CB	Furnish & Install Clean Fill - Payment will be made for the actual cubic yards of cementitious backfill delivered and installed.
9CF	Furnish & Install Clean Fill - Payment will be made for the actual cubic yards of clean fill delivered and installed.

ITEM NO.	PAYMENT
10	Bituminous Concrete Pavement (Town & Village Roadways) - Payment will be made for the actual number of square yards of new asphalt pavement placed in order to restore Town roadways. Includes costs for saw cutting, hauling, dumping, placing, grading and leveling, compacting, sealing and all material, tools and labor necessary therefore and incidental thereto.
11	New York State Pavement Restoration - Payment will be made for the actual number of square yards of new pavement placed in order to restore State roadways (composite, travel lane or shoulder area). Includes costs for saw cutting, hauling, dumping, placing, grading and leveling, compacting, sealing and all material, tools and labor necessary therefore and incidental thereto
12	Bituminous Concrete Pavement (County Roadways) - Payment will be made for the actual number of square yards of new asphalt pavement placed in order to restore County roadways. Includes costs for saw cutting, hauling, dumping, placing, grading and leveling, compacting, sealing and all material, tools and labor necessary therefore and incidental thereto.
13	Jacking of Steel Casing - Payment shall be made at the lump sum price bid for jacking of specified steel casing and shall include costs of labor, equipment and material, construction and dismantling of launching and receiving pits, test holes, traffic control, and all related, incidental and appurtenant work.
13DD	Directional Drilling of PE Pipe - Payment shall be made at the lump sum price bid for the directional drilling of specified polyethylene pipe and shall include costs of labor, equipment and material, construction and dismantling of launching and receiving pits, test holes, traffic control, and all related, incidental and appurtenant work
14	Topsoil, Seeding & Sod - Payment shall be made at the unit price per linear foot of topsoil and seeding/sod installed, completed and accepted. Include costs for stockpiling and replacing topsoil, importing additional topsoil, transporting, grading and leveling, seeding, Sodding and all material, tools, labor, equipment, maintenance, watering, moving and all other work incidental thereto and necessary therefore.
15	Cement Concrete Sidewalk, Driveway Aprons & Curb - Payment will be made for the actual square footage of concrete sidewalk or driveway aprons and linear feet of concrete curb removed and replaced. Include costs for new materials including formwork and concrete, transporting, placing, grading, leveling, curing and all other work incidental thereto and necessary therefore.
22	Furnish & Install Polyethylene Pipe Wrap - Payment will be made for the actual linear feet of water main installed with a polyethylene wrap. Payment will not be made where pipe wrap is overlapped
23	Rock & Masonry Excavation - Payment will be made for the actual volume in cubic feet of rock or masonry excavation removed and disposed of.
26A	Moving Fee - Payment shall be made at the lump sum price bid for the number of times that the Engineer orders the Contractor to temporarily move out of the project for any time period. Payment will not be made for the initial mobilization to site or for the return to the site after testing to abandon existing mains or install water services.

ITEM NO.	PAYMENT
28	Control Valve in Concrete Vault - Payment shall be made for all work and materials associated with the installation of new precast concrete vault, 8-inch pressure reducing valve, piping and fittings inside new vault, aluminum access ladder and heavy duty vault access manhole and cover, as shown on the Plans and/or as described in the Specifications
29	Temporary Bituminous Pavement - Payment shall be made at the unit price per linear foot of temporary pavement installed and removed. Include costs for materials, transporting, placing, grading and leveling, rolling, removal and disposal as and when required, and all related incidental and appurtenant work. The Engineer shall order temporary pavement installed as conditions warrant.
30	Copper Water Service Lines - Payment will be made for the actual number of copper water services installed or reconnected and accepted. Includes costs for pipe, pipe materials as indicated in plans and specifications, pipe installation, excavation, compaction, backfill, pipe leakage testing, restoration and all work incidental thereto and necessary therefore.
35	Maintenance & Protection of Traffic - Payment shall be made at the lump sum price for all costs associated with the maintenance & protection of traffic as described in the contract documents and necessary to complete the contract work.
38	Buried Mechanical Joint Butterfly Valves w/ Boxes - Payment shall be made at the unit price for each butterfly valve and box installed and accepted. Include costs for all labor, equipment, materials, excavation and backfill and all work incidental thereto and necessary therefore.
422L	Traffic Detector Loops- Payment shall be made at the lump sum price for all costs to install and repair traffic detector loops, including road saw-cut as described in the contract documents and necessary to complete the contract work.

END OF SECTION

SECTION 012500 - PRODUCT SUBSTITUTION PROCEDURES

PART 1 - GENERAL

1.01 SECTION INCLUDES

A. This Section includes the requirements for substitution of specified products during construction.

B. *The* Engineer *will consider requests for substitutions only within* ***thirty (30)*** *days from the date of the Notice to Proceed.*

C. Only products not specifically named in the bid are eligible for substitution in accordance with the requirements contained herein these specifications.

D. Products named by the Bidder, at the time of bid, shall be furnished and installed and substitutions will not be considered by the Owner/Engineer for those products named in the bid.

1.02 CONTRACTOR'S OPTIONS

A. For products specified only by reference standard, select any product meeting that standard.

B. For products specified by naming several products or manufacturers, select any one of the products or manufacturers named which complies with the Specifications.

C. Where products are not named, then submit products that meet the specifications.

PART 2 - PRODUCTS

2.01 SUBSTITUTIONS

A. Name - The Drawings and Specifications list acceptable manufacturers, commercial names, trademarks, brands and other product, material and equipment designations. Such names are provided to establish the required type, quality and other salient requirements of procurement.

B. Equals - An item equal to that named or described on the Drawings or in the Specifications may be provided by Contractor if accepted by the Engineer.

C. A request for product substitution constitutes a representation that the Contractor:
   1. Has investigated proposed Product and determined that it meets or exceeds the quality level of the specified Product.
   2. Shall provide the same warranty for the Substitution as for the specified Product.
   3. Shall coordinate installation and make changes to other Work that may be required for the Work to be complete with no additional cost to Owner, including extra charges by material suppliers and vendors.
   4. Waives claims for additional costs or time extension that may subsequently become apparent.
   5. Shall reimburse the Owner and the Engineer for review or redesign services associated with re-approval by authorities.
   6. Shall reimburse the Owner for all additional engineering services claimed by the Engineer for extra services associated with the review of the Contractor's substituted item since it could not have been originally included in the Engineer's professional engineering services agreement. Reimbursement shall be based on the man-hours expended, at current billing rates.

D. Substitutions will not be considered when they are indicated or implied on shop drawing or product data submittals, without separate written request, or when acceptance will require revision to the Contract Documents.

E. Substitution Submittal Procedure:
   1. The Contractor shall submit the REQUEST FOR SUBSTITUTION FORM for consideration including all required information.
   2. The Contractor shall use the form included within this Section.
   3. All forms shall be type written.
   4. Submit shop drawings, product data, and certified test results attesting to the proposed product equivalence.

F. The burden to prove product equivalence rests on the Contractor.

G. The Engineer will notify Contractor in writing of decision to accept or reject request and at that time the Contractor can make a formal submittal in accordance with the requirements contained in Section 013300.

H. Substitutions may be considered when a product becomes unavailable through no fault of the Contractor.

PART 3 - EXECUTION

NOT USED

This space left intentionally blank.

REQUEST FOR SUBSTITUTION FORM

Project: Old Orchard Subdivision Substitution Request Number:_____

Contractor:_____

Address:_____

To:_____ Date:_____

H2M Project Number: RDWD 16-51 Owner: Riverhead Water District

Contract Name:_____ Contract No.:_____

Specification Title:_____

Section:_____ Page:_____ Article/Paragraph:_____

Drawing No(s).:_____

Proposed Substitution:_____

Manufacturer:_____ Address:_____

Trade Name:_____ Phone #: (____)_____

Installer:_____ Address:_____

Phone #: (____)_____

History: ___New product ___2-5 years old ___5-10 years old ___More than 10 years old

Differences between proposed substitution and specified product:

___Point-by-point comparative data attached

Reason for not providing specified item (Attach separate sheet if necessary):

Typical Similar Installation:

Project:_____

Engineer / Architect:_____

Address:_____

Owner:_____

Date Installed:_____

Submit complete installation list on separate sheets.

Proposed substitution affects other parts of Work: ___No ___Yes

Explain:_____

Gross Savings to Owner for accepting substitution: $_____

Proposed substitution changes Contract Time: ___No ___Yes

Add / deduct (circle):_____ days

Supporting data attached for evaluation of the proposed substitution:

___Product Data ___Photos ___Drawings ___Tests ___Reports ___Samples

___Other (explain):_____

Attached data includes description, specifications, drawings, photographs, performance and test data adequate for evaluation of request; applicable portions of data are clearly identified.

Attached data also includes a description of changes to Contract Documents that proposed substitution will require for its proper installation.

The undersigned certifies that the following paragraphs, unless modified by attachments, are correct:

1. Proposed Substitution has been fully checked and coordinated with Contract Documents.
2. Proposed Substitution does not affect dimensions shown on Drawings.
3. Proposed Substitution does not require revisions to any other Prime Contractor's work.
4. The undersigned will pay for changes to building design, including Architectural and Engineering design, detailing, and construction costs caused by requested Substitution.
5. Proposed Substitution will have no adverse affect on other trades, construction schedule, or specified warranty requirements.
6. Maintenance and service parts will be locally available for proposed substitution.
7. The undersigned further states that the function, appearance, and quality of proposed Substitution are equivalent or superior to specified item.

This request for product substitution also constitutes a representation that I, as the Contractor:

1. Has investigated proposed Product and determined that it meets or exceeds the quality of the specified Product.
2. Shall provide the same warranty for the Substitution as for the specified Product.
3. Shall coordinate installation and make changes to other Work that may be required for the Work to be complete with no additional cost to Owner, including extra charges by other Prime Contractors, material suppliers, and vendors.
4. Waives claims for additional costs or time extension that may subsequently become apparent.
5. Shall reimburse the Owner and the Engineer for review or redesign services associated with re-approval by authorities.
6. Shall reimburse the Owner for all additional engineering services claimed by the Engineer for extra services associated with the review of the Contractor's substituted item since it could not have been originally included in the Engineer's professional engineering services agreement. Reimbursement shall be based on the man-hours expended, at current billing rates.

Contractor's Authorized Representative (Typewritten):_____

Authorized Signature:_____

Date:_____

END OF SECTION

SECTION 012900 - PAYMENT PROCEDURES

PART 1 - GENERAL

1.01 DESCRIPTION

A. Work under this Section specifies the procedures used to process partial payments and the Final Payment Request.

1.02 TIME FOR COMPLETION

A. Inasmuch as the provisions of the Contract relating to the time for performance and completion of the Work are for the purposes of enabling the Owner to proceed with the construction of a public improvement in accordance with a predetermined program, and inasmuch as failure to complete the Work within the period herein specified may result in damage or loss to the Owner, time is of the essence of the Contract.

B. Time for completion of the Work shall be in accordance with that stipulated in the Contract Documents.

C. The date for completion will be calculated from the date shown on the Notice to Proceed. The Contractor shall execute the Work with diligence from day to day, and complete it within the time fixed.

D. For the purpose of defining the date of substantial completion, the Project will be considered complete when all Work covered by the Contract has been performed and all installations and equipment have been tested and are ready for permanent use. Removal of the Contractor's equipment and other minor adjustments which do not prevent use of the Project will not be a factor in establishing the date of substantial completion.

E. Notwithstanding the foregoing, the Engineer will establish the date of substantial completion when the project is accepted and ready for operation, and no large or major items of work are as yet outstanding. At such time, the Engineer will issue a punch list, itemizing the items of work remaining. The punch list will include "minor" items only, as defined solely by the Engineer. Any prior punch lists, which include "major" or significant items, as defined by the Engineer, shall not be a criterion in establishing the date of substantial completion.

1.03 PARTIAL COMPENSATION

A. At the Owner's discretion, the Contractor may receive compensation for materials and products delivered to the site yet not installed providing:
   1. A canceled check or paid bill from the supplier is submitted to the Engineer indicating that the Contractor has paid the supplier for the material or equipment.
   2. The material or piece of equipment is properly stored and protected from the elements and/or vandalism in accordance with the manufacturer's written requirements for long term storage.
   3. A certificate of insurance is provided for the material or piece of equipment in the event of a fire, vandalism, theft, etc.
   4. A bill of material is delivered to the Engineer at the time of delivery itemizing the subject material or equipment. Payment will be made for on-site material and/or equipment in the amount of 80% of the gross amount of the paid invoice. This payment will be subject to the normal retainage of the partial estimate.
   5. The Engineer has agreed to the pre-purchasing of the materials.

B. The Contractor may not receive compensation for materials and products stored in the Contractor's yard or shop unless permitted by the Owner.

1.04 APPLICATIONS FOR PAYMENT

A. The Contractor shall review the percentage of work completed during the payment period with the Engineer, based on the bid items in the proposal. The Engineer shall make the final decision on the percentage of work completed.

B. The form of application for payment shall be AIA Document G702, application and certificate for payment supported by AIA Document G703, Continuation Sheet.

C. Submit one (1) copy of each payment application, completed, signed and notarized.

D. Content and Format: Utilize Schedule of Values for listing items in Application for Payment.

E. The payment application shall include a Contractor Invoice and an Owner Claim Voucher.

F. Provide completed Labor Affidavit Form for each pay period included in the certified payroll reports for each payment application for both the contractor and any subcontractor(s).

G. Submit payment application to Engineer no later than the first day of each month. Payments received after the first day of each month shall be reviewed and processed after the first day of the following month. Only one application for payment will be reviewed and processed each month.

H. Submit certified payroll receipts for all workers and subcontractors. Payroll receipts shall be submitted with every application for payment. All payroll receipts shall be certified correct and notarized by a Notary in the State of New York. Application for Payment will not be processed unless all payroll receipts are received.

I. Contractor shall pay all workers and have all subcontractors pay all workers the prevailing New York State Wage Rates.

J. Owner may conduct on-site interviews with all workers to verify payments of prevailing wage rates are enforced.

K. The Engineer shall submit the documentation along with an Engineer's Payment Report to the Owner for payment.

L. Retainage in the amount of 5% will be held from each partial payment. Retainage will only be released upon full completion of the project and will be included in the final payment.

1.05 ACCEPTANCE OF FINAL PAYMENT REQUEST

A. The Contractor shall be conclusively deemed to have accepted the Final Payment Request as a correct statement of the total liability of the Owner and of the compensation paid and to be paid to the Contractor by the Owner unless within seven (7) days after delivery of his copy of the Final Payment Request to him, the Contractor shall return such copy to the Owner together with a statement of his objections to such request and of any claim for damages or compensation in excess of the amounts shown on the Request. The acceptance by the Contractor of the Final Payment Request approved by the Owner shall constitute a release and shall discharge the Owner from all further claims by the Contractor arising out of or relating to the Contract, including but not limited to, a release from all impact costs.

1.06 SCOPE OF PAYMENTS

A. The Contractor shall receive and accept the compensation as herein provided, in full payment for furnishing all materials, labor, tools, and equipment and for performing all work contemplated

and embraced under the Contract, also for all loss or damage arising out of the nature of the Work or from the action of the elements, or from any unforeseen difficulties or obstructions which may arise or be encountered during the prosecution of the Work, and for all risks of every description connected with the prosecution of the Work, until its final acceptance by the Owner, also for all expenses incurred by, or in consequence of, the suspension or discontinuance of the said prosecution of the Work as herein specified, and for all actual or alleged infringements of patent, trademark, or copyright, and for completing the Work and the whole hereof, in an acceptable manner, according to the Plans, Specifications, and other Contract Documents. The payment of any partial or final estimate shall in no way or in no degree prejudice or affect the obligation of the Contractor, at his own cost and expense, to renew or replace all defects and imperfections, or damages. The Engineer shall be the judge, and the said Contractor shall be liable to the Owner for failure so to do.

PART 2 - PRODUCTS

NOT USED.

PART 3 - EXECUTION

NOT USED.

END OF SECTION

SECTION 013100 - PROJECT MANAGEMENT AND COORDINATION

PART 1 - GENERAL

1.01 SECTION INCLUDES

A. Work of this Section includes:
   1. Requests for Interpretation or for information
   2. Administration of subcontracts
   3. Coordination of work with utility companies and the Owner/Engineer
   4. Communication and coordination requirements
   5. Qualifications of Contractor's job site superintendent

B. Site staffing requirements for the Contractor's superintendent are also specified herein, the costs for which shall be included in the Contract price.

1.02 REQUEST FOR INTERPRETATION OR INFORMATION

A. The Contractor shall use the Request for Interpretation/Information Form included within this Section when the Contractor feels that additional information is needed to perform the work of the Contract.

B. The Engineer may not respond to any requests unless the form is used.

C. The Engineer's verbal response(s) to the Contractor's formal requests, if provided, shall not constitute an official response and if acted upon by the Contractor are done so at the Contractor's own risk and liability and shall not be subject to claims for additional compensation.

D. A signed facsimile or emailed image of the form will be accepted.

E. The Engineer will respond in writing to the request as soon as possible.

1.03 SUBCONTRACTOR ADMINISTRATION AND COORDINATION

A. Terms and conditions of the Contract shall be binding upon each subcontractor.

B. Furnish each subcontractor and major equipment vendor at least one (1) copy of the Plans and Technical Specifications.

C. Provide at least one (1) copy of each approved shop drawing to each subcontractor whose work may depend upon the contents of the shop drawing submittal. The Owner reserves the right to stop all work, without claims for delay, until such time as appropriate subcontractors are furnished with appropriate shop drawings.

D. The Contractor shall sequence and schedule the work of subcontractors. Coordinate construction and administration activities of subcontractors. The Engineer and Owner will not accept telephone calls, facsimiles or office visits from any subcontractors on the project. Subcontractor and vendor questions and clarifications shall be directed to the Engineer by the Contractor.

E. The Contractor's on-site project superintendent shall inspect all the work of all of his/her subcontractors, as it is being constructed. The Contractor's subcontractor shall not be permitted to do any work on the site without the Contractor's job site superintendent also being there to inspect the work as it is being performed.

1.04 UTILITY COORDINATION

A. Comply with the requirements of 16 NYCRR Part 753 - Protection of Underground Facilities. Submit a letter stating the case number.

B. Comply with the utility coordination requirements contained in the General Conditions.

1.05 PUBLIC/PRIVATE UTILITIES

A. Notify all public and private utilities in accordance with Article 20, Section 322-a of the New York State General Business Law for location and markout of existing utilities in the vicinity of the work.

B. Repair all utilities damaged during the Work to the standards and approval of the respective utility at no cost to the Owner.

1.06 SPECIFIC COORDINATION REQUIREMENTS

A. Sequence and schedule work so as not to interfere with the work by others. Coordinate the work of this Contract with the work by others. In case of conflicts due to improper coordination by the Contractor, the Owner/Engineer's resolution will be final. No compensation will be awarded for extra work required to resolve conflicts.

B. Coordinate space requirements, supports, and installation of mechanical, electrical and plumbing work which may be indicated diagrammatically on the Drawings. Follow routing shown for pipes, ducts, and conduit as closely as practicable. Place runs parallel with building lines. Utilize spaces efficiently to maximize accessibility for other installations, maintenance, and to facilitate repairs.

C. In finished areas, except as otherwise indicated, conceal pipes, ducts, and wiring within the construction. Coordinate locations of all fixtures and outlets with finish elements and work by all other trades.

D. The Contractor shall also coordinate the work by complying with the following:
   1. Construction Schedule: The Contractor shall provide a construction schedule as specified in Section 013216 - Construction Schedules.
   2. Weekly Schedule: By 3:00 PM of each Friday during the construction period, the Contractor shall fax or email a typed memo addressed to the Engineer/Owner’s resident field engineer/inspector and designated office project manager summarizing the work for the following week. The memo shall also be faxed or emailed to the Owner. The memo shall briefly itemize the planned activities for the coming week. The memo shall also include a summary of expected material/equipment deliveries, concrete pours, utility tie-ins, excavated material removals and other heavy construction traffic that may impact the work activities for the coming week.
   3. Email Account: The Contractor shall maintain an email account that shall be used to improve communication. An email shall not constitute a formal advisement regarding the terms and conditions of the contract. Email shall only be considered an informal way of notifying relevant parties of project related activities.
   4. Email List: The Contractor, within five (5) calendar days from the Notice To Proceed, shall provide a list of email addresses for each major equipment supplier and local representative, if such exists. A contact person shall be provided for each email address.

1.07 CONTRACTOR'S JOB SITE SUPERINTENDENT

A. The Contractor shall employ an on-site superintendent as specified herein below. He/She shall be a full-time employee of the Contractor.

B. The Contractor shall name the job site superintendent within five (5) days of the Notice To Proceed. A letter to the Engineer shall be provided.

C. He/She shall have the authority to sequence and schedule the work, and to staff the project, so as not to interfere with the work by others and to complete the work daily within the time so required.

D. The Superintendent shall have a minimum of five (5) years of experience as a job site superintendent for projects of equal size and complexity.

E. The superintendent shall not be a foreman or crew supervisor.

F. The superintendent shall be qualified to perform the duties so required to successfully complete the work in accordance with the Contract Documents.

G. The superintendent shall speak English. If required by the Engineer, provide a resume for the proposed superintendent that shall be typed and shall list the qualifications of the superintendent. Prior to the Contractor assigning a superintendent to the project, he may wish to arrange an interview with the Engineer to determine the proposed superintendent's ability to properly coordinate the work through the Owner/Engineer. The Contractor shall employ a superintendent acceptable to the Owner.

THIS SPACE LEFT INTENTIONALLY BLANK.

REQUEST FOR INTERPRETATION/INFORMATION (RFI)

OWNER'S NAME: Riverhead Water District

PROJECT NAME & CONTRACT DESIGNATION: Old Orchard Subdivision

CONSTRUCTION CONTRACT NO.: RDWD 16-51

Product, Item, or System:	
Request Date:	RFI No.:
Specification Section:	Paragraph Ref:
Contract Drawing Reference(s):	
Describe Request:	
Signed:	See Contractor's Attachments for Additional Description for Information
Owner/Engineer Response:	
Engineer (Printed):	See Engineer's Attachments for Additional Information
Engineer's Signature & Date	*Response Accepted By Contractor* *Contractor's Signature & Date*

The Work shall be carried out in accordance with these supplemental instructions without change in Contract amount or Contract time for completion. Prior to proceeding with these instructions, indicate your acceptance of these instructions by signing where indicated and returning this form to the Engineer.

PART 2 - PRODUCTS

NOT USED

PART 3 - EXECUTION

NOT USED

END OF SECTION

SECTION 013216 - CONSTRUCTION SCHEDULE

PART 1 - GENERAL

1.01 SECTION INCLUDES

A. This Section specifies the requirements for preparing construction schedules and for keeping them up to date.

B. All schedules shall be submitted in accordance with the requirements contained herein in Section 013300.

1.02 CONSTRUCTION SCHEDULE - GENERAL

A. Coordinate the work and maintain the construction schedule. In the event actual progress begins to lag the schedule, promptly employ additional means and methods of construction to make up the lost time.

B. Keep the construction schedule current and revise and resubmit as often as necessary to accurately reflect the conditions of the work, past progress and anticipated future progress.

C. The construction schedule shall be completed, submitted, and deemed received by the Engineer prior to the first payment application.

D. The schedule, when approved by the Engineer and the Owner, shall establish the dates for starting and completing work for the various portions of the Contract. It shall be the duty of the Contractor to conform to his/her own schedule and to perform the work within the time limits indicated. Failure to adhere to the approved schedule shall expose the Contractor to disputes, claims and additional costs incurred by others.

E. Coordinate letting of subcontracts, material purchases, shop drawing submissions, delivery of materials, and sequence of operations, to conform to the schedule.

1.03 CONSTRUCTION SCHEDULE - GANTT CHART TYPE

A. The schedule shall show, in detail, the proposed sequence of the work and the estimated date of starting and completing each stage of the work in order to complete the project within the contract time.

B. Prepare the schedule in a manner so that the actual progress of the work can be recorded and compared with the expected progress.

C. Coordinate the construction schedule with the proposed schedules of the equipment suppliers and subcontractors.

D. The schedule shall be plotted out in color and shall be 36-inch by 40-inch. It shall contain as many sheets as are necessary to show all rolled down tasks. Partially printed schedules will not be accepted. The Contractor shall arrange to have it plotted on a color plotter suitable for the intended application.

E. The schedule shall show the following:
   1. Task links/task dependency in blue ink.
   2. Work under the Contract in green ink.
   3. Work by others in blue ink.
   4. Milestone dates (zero duration) by a red diamond.
   5. The end date for each task and subtask at the end of a bar.

6. The description of all major tasks within the bar. The bar shall be red.
7. Critical path.

1.04 REVISION OF PROJECT PROGRESS SCHEDULE

A. The Contractor shall evaluate and provide updated construction schedules monthly in accordance with job requirements. Each update shall be submitted to the Engineer for information purposes and be provided by the last Friday of every month

PART 2 - PRODUCTS

NOT USED

PART 3 - EXECUTION

NOT USED

END OF SECTION

SECTION 013300 - SUBMITTALS

PART 1 - GENERAL

1.01 SECTION INCLUDES

A. This Section specifies the requirements for making submissions for the project. Electronic submissions will be required unless expressly noted otherwise.

B. Refer to Section 013216 - Construction Schedule for the requirements concerning the submission of construction schedules and for making updates thereto.

1.02 IDENTIFICATION OF SUBMITTALS

A. Each and every submission shall be provided by the Contractor and shall be accompanied by a SUBMISSION TRANSMITTAL FORM. The Contractor shall use the specimen form made a part of this Section. *Submittals not containing the form will be returned to the Contractor un-reviewed.* The Engineer will not review project submissions until such time as the form is competed in its entirety. Identify each submittal and resubmittal using the form.

B. Each individual submittal shall be identified with a 'submission log number' as specified here in this example: 033000.01-1
   1. The Section number for which the submittal applies, followed by a period, shall be indicated, "033000.".
   2. The submittal within the Section shall be indicated by the next grouping "01". For instance and in this example, the concrete design mix may be submission "01", the waterstop catalog cut may be "02", and so on. Submittals shall be sequentially numbered within the Specification Section, i.e. 01, 02, etc.
   3. The number of times the submission was made shall be preceded by a dash and a numerical suffix as follows: "-1". In this example, the concrete design mix is being submitted for the first time. Use the number "1" for the first time it is being submitted.
   4. Subsequent submissions of the concrete design mix shall utilize the original number and a sequential numeric suffix, i.e. "2" for a resubmission, "3" for the second resubmission, and so on. Substitute the new number for the original "1".

C. Where a layout drawing, containing different elements of the project, is being submitted and there is a question as to what the log number might be, then the Contractor shall contact the Engineer so that an agreed upon log number can be assigned.

D. It is incumbent on the Contractor to initially assign the submission log number designation to each submission. Submissions not containing a log number, as specified above, will be returned to the Contractor un-reviewed by the Engineer.

E. Every submittal shall also be accompanied by a Transmittal Letter (or "Speed Form") addressed to the Engineer's Project Manager as hereinafter defined.

1.03 COORDINATION OF SUBMITTALS

A. Prior to submitting to the Engineer, fully coordinate all interrelated work. As a minimum, do the following:
   1. Determine and verify all field dimensions and conditions by field measuring existing conditions and the installed work of this Contract and work by others.
   2. Coordinate with all trades, subcontractors, vendors, system and equipment suppliers and manufacturers, public agencies, and utility companies and secure all necessary approvals, in writing.

B. Make submittals in groups containing all associated items that in some way depend upon each other.
   1. This also applies to color charts, as one color may not be able to be selected without the selection of other colors so as to form a color-coordinated group.
   2. The Engineer may elect not to review partial or incomplete submissions, whereupon he will notify the Contractor of the additional submissions that are required before a review can be made.

1.04 TIMING OF SUBMITTALS

A. Make submittals far enough in advance of scheduled dates of installation to provide time for reviews, for securing necessary approvals, for possible revisions and re-submittals, and for placing orders and securing delivery. The Engineer will review submittals in a manner as expedient as possible, and will generally send a written response to the Contractor within seven (7) calendar days of receipt of submittals.

B. Submissions may be returned reviewed, unreviewed, rejected, returned conditioned upon submission of related items, or for other reasons set forth in the Contract Documents.

C. Make submissions well in advance as the returning, rejecting or disapproval of submissions or other similar circumstances are possible and are deemed "avoidable delays". Costs for these delays or those attributed to Contractor's tardiness in making submittals shall be borne by the Contractor.

D. ***All*** submittals requiring Engineer's review (except operations manuals) as required under the technical specifications of these documents shall be submitted within **FORTY FIVE (45)** consecutive calendar days after the date of the Notice to Proceed. An amount of **$250** per calendar day shall be deducted from payment due the Contractor for ***each*** day that an outstanding submittal exists, said amount being the cost associated with the Engineer's review.

E. Operation and maintenance manuals shall be submitted at least **FORTY FIVE (45)** consecutive calendar days prior to scheduled startup of the unit or system.

F. If material or equipment is installed before it has been deemed to be in general compliance with the Contract Documents, as determined by the Engineer, the Contractor shall be liable for its removal and replacement at no extra charge and without an increase in contract time.

1.05 DESTINATION OF SUBMITTALS

A. Each submission of documents shall be accompanied by a transmittal form containing the name of the project, the contract name, the Engineer's project manager, a submittal ID number, and a description of content for the submitted items.

B. A copy of the TRANSMITTAL FORM shall also be provided to the Engineer's inspector at the job site.

C. Electronic submittals shall be transmitted through the Newforma® Project Center website or by email, pending instruction by the Engineer. H2M architects + engineers is using a project information application called Newforma® Project Center. One of its components is Newforma Info Exchange, a web application that facilitates sending and sharing transmittals, and file sharing.

D. As an external team member on this project the Contractor will be required to access the H2M architects + engineers/Newforma Info Exchange website for information related to the project, including file transfers, RFI, Submittals, Action Items, and project Calendar information. The

Contractor will have access to this website using any internet-capable computer running Internet Explorer or Firefox. All data transmitted through the H2M architects + engineers/Newforma Info Exchange website is encrypted and logged. Further instructions will be provided to the Contractor after the contract is awarded.

E. Other submissions, such as material samples or other items as instructed by the Engineer, shall be sent to the Engineer's office as follows:

H2M architects + engineers
538 Broad Hollow Road - 4th Floor East
Melville, New York 11747
Attention: H2M Project Manager (Named at Pre-Construction Conference or in the Notice to Proceed)

1.06 CLARITY OF SUBMITTALS

A. All printed materials shall be neat, clean, professionally drafted by hand or by computer, clear, legible, and of such quality that they can be easily reproduced by normal photocopying.

B. All electronic submittals shall be produced with a minimum resolution of 300 dpi.

C. Binders of information shall be separated into groups, subsystems, or similar equipment/function. Copies not conforming to this paragraph will be returned to the Contractor without the Engineer's review.

1.07 CONTRACTOR'S REPRESENTATION

A. By making a submission, the Contractor represents that he has determined and verified all field measurements and dimensions, field construction criteria, site and building constraints in terms of limitations in moving equipment into an enclosed space, materials, catalog and model numbers and similar data and that he has checked and coordinated each submission with other work at or adjacent to the project site in accordance with the requirements contained in Section 013100 - Project Management and Coordination and the Contract Documents.

B. Every SUBMISSION TRANSMITTAL FORM shall contain the Contractor's approval stamp and date showing that the submittal has been approved by the Contractor. The Engineer will not review submittals that have not yet been reviewed and approved by the Contractor.

1.08 ENGINEER/ARCHITECT'S REVIEW

A. Engineer will review and comment on each submission conforming to the requirements of this Section.
   1. Engineer's review will be for conformance with the design concept of the project and will be confined to general arrangement and compliance with the Contract Documents only, and will not be for the purpose of checking dimensions, weights, clearances, fittings, laying lengths, tolerances, interference's, for coordinating the work by others or subcontractors.
   2. The Engineer's review of a separate item, or portion of a system, does not represent a review of an assembly or system in which the item functions.

B. The Engineer will mark submittals as follows:
   1. NO EXCEPTION TAKEN (**A**) - No corrections, no marks. The content of this submittal has been reviewed by the Engineer and been found to be in general compliance with the Contract Documents. No further submission of this submittal is required and the information contained in the submittal may be built into the work in accordance with the Contract Documents.
   2. MAKE CORRECTIONS NOTED (**B**) - Minor amount of corrections. The content of this submittal has been reviewed by the Engineer and has been found in general to be in

compliance with the Contract Documents. The notations made on the submittal by the Engineer shall be incorporated into the work in accordance with the terms and conditions of the Contract Documents. No further submission of this submittal is required.

3. AMEND AND RESUBMIT (**C**) - The content of this submittal has been reviewed by the Engineer and this review has determined that additional data and/or modification to the submitted data or other changes are required to bring the work represented in this submittal into compliance with the Contract Documents. This submittal shall be reviewed and revised in accordance with the Engineer's comments and resubmitted to the Engineer for review. The information contained on the resubmittal shall not be incorporated into the work until the submittal is returned to the Contractor marked "NO EXCEPTION TAKEN" or "MAKE CORRECTIONS NOTED".
4. REJECTED (**D**) - The content of this submittal has been reviewed by the Engineer and has been determined not to be in accordance with the requirements contained in the Contract Document and requires too many corrections or other justifiable reason. The submittal shall be corrected and resubmitted or a submittal of an alternate shall be provided. No items are to be fabricated under this mark.
5. SUBMIT SPECIFIED ITEM (**E**) - The content of this submittal has been reviewed by the Engineer and this review has indicated that the work displayed in the submittal is not in compliance with the Contract Documents. The Contractor shall submit another submittal for this portion of the work, which complies with the Contract Documents.
6. RECEIVED (**R**) - This submittal is accepted on the project and filed for record purposes only, in accordance with the terms and conditions of the Contract Documents. Documents marked "RECEIVED" will not be returned.

C. No payment will be made on any item for which a submission is required if such submission:
   1. has not been made,
   2. has been made but was not stamped "No Exceptions Taken" by Engineer,
   3. has been made and stamped "Make Corrections Noted", but contractor has not complied with Engineer's notes marked on the submittal,
   4. has been made and stamped "No Exceptions Taken", but item provided does not conform to the shop drawing nor to the Contract Documents.

D. Submittals not required by these specifications will not be recognized or processed.

E. Provide an 8-inch by 10-inch space for the Engineer's review stamp.

1.09 RESUBMISSIONS

A. Prepare new and additional submissions, make required corrections, and resubmit corrected copies until found in compliance with the Contract Documents.

B. On, or with, re-submittals, clearly describe revisions and changes made, other than the corrections requested by Engineer, which did not appear on the previous submissions.

1.10 CONTRACTOR'S RESPONSIBILITIES

A. Engineer's review of submittals shall not relieve the Contractor of his/her responsibility for any deviation from the requirements of the Contract Documents nor relieve the Contractor from responsibility for errors or omissions in the submittals.

B. No portion of the work requiring a submission shall be commenced until the Engineer has found the submission in general compliance with the Contract Documents.

C. The Contractor shall provide written notification of any specification or drawing deviation.

1.11 EXCESS COSTS FOR ENGINEERING/ARCHITECTURAL SERVICES

A. The Owner will charge to the Contractor, and will deduct from the partial and final payments due the Contractor, all excess engineering and architectural expenses incurred by the Owner for extra services (work) conducted or undertaken by the Engineer as stipulated below:
   1. Services and other similar charges because of the Contractor's errors, omissions, or failures to conform to the requirements of the Contract Documents as related to administrative charges associated with non-compliance with the requirements for making project submissions.
   2. Services and other similar charges required to examine and evaluate any changes or alternates proposed by the Contractor and which may vary from the Contract Documents.
   3. Services and other similar charges as a result of the Contractor's proposed substitution of materials, equipment or products which require a redesign of any portion of the project, as contained in the Contract Documents at the time of bid.
   4. Services and other similar charges as a result of the Contractor's proposed substitution of products which require an engineering and/or architectural evaluation, beyond the time stipulated in Section 012500, to determine if the substituted product is equal to that specified.
   5. Services and other similar charges as a result of changes by the Contractor to dimensions, weights, sizes, voltages, phase, horsepower, materials of construction, and similar physical or operating characteristics of the product furnished which require redesign of the project in any way.
   6. Services and other similar charges for the review of resubmissions of shop drawings that have been marked as "No Exceptions Taken" or "Make Corrections Noted".
   7. Services and other similar charges for the review of shop drawings submitted more than two (2) times for the same product or portion of the work.

1.12 MISCELLANEOUS SUBMITTALS

A. Provide a Submittal Schedule within seven (7) calendar days from the date of the Notice to Proceed. The Submittal Schedule shall list all submittals for the project referenced by draft log number. Provide the estimated date that the submittal will be transmitted to the Engineer for review.

B. Within seven (7) calendar days from the date of the Pre-Construction Meeting, submit a Proposed Products List. This list shall be a complete listing of all products proposed for use, with name of manufacturer, service headquarters, trade name and model number of each product. Partial listings will not be accepted.

C. For products specified only by reference standards, give manufacturer, trade name, model or catalog designation, and reference standards.

1.13 SUBCONTRACTOR LIST

A. The Contractor shall submit, on AIA Form G705, within THIRTY (30) calendar days after the date of the Notice to Proceed, a list of all subcontractors, including the names of the major subcontractors that were submitted at the time of the bid.

1.14 SAFETY DATA SHEETS (SDS)

A. Comply with "Right to Know" requirements of Chapter 551 of Laws of New York, 1980, concerning notification of the use of toxic substances.

B. Any product or substance used by the Contractor or its subcontractors which is listed in Subpart Z of OSHA Part 1910 Title 29 of the Code of Federal Regulations entitled "Toxic and Hazardous

Substances" shall be identified to the Owner/Engineer by the Contractor's submission of a standard Safety Data Sheet (SDS) in accordance with "Right To Know" requirements.

C. Products will not be permitted to be kept on site without a SDS.

1.15 SHOP DRAWINGS

A. Submit shop drawings for all fabricated work, for all manufactured items and for items specifically required by the specifications.

B. Submit one (1) electronic copy of each standard drawing, catalog cut, or other material. All shop drawings or submittals that are not in the standard 8-1/2" x 11" format shall be submitted both electronically and in paper. Samples shall be delivered directly to the office of the Engineer. The Engineer will return an electronic copy of each submittal once reviewed.

C. Subcontractors shall submit shop drawings directly to the Contractor for checking. Thoroughly check subcontractors' shop drawings for measurements, sizes of members, details, materials, and conformance with the Contract Documents.
   1. Return submittals which are found to be inaccurate or in error.
   2. Do not submit to the Engineer until all corrections have been made.

D. Clearly show the relationship of the various parts of the project and where the information provided on the submission depends upon field measurements and existing conditions.

E. The Contractor shall make all measurements, confirm existing conditions, and include them on the shop drawings before making a submission to the Engineer.

F. Submissions for a single item, or group of related items shall be complete.

G. When submitting manufacturers' catalogs, pamphlets or other data sheets, in lieu of prepared shop drawings, clearly mark the items being submitted for review.

H. If the shop drawings contain any departures from the contract requirements, specifically describe them in the letter of transmittal.
   1. Where such departures require revisions to layouts, structural, architectural, electrical, HVAC or any other changes to the work as shown, Contractor shall, at his own expense, prepare and submit revised drawings accordingly.
   2. Make drawings the same size as the Contract Drawings and to the same scale.

1.16 SAMPLES

A. Where required, or where requested by the Engineer, submit sample or test specimens of materials to be used or offered for use.
   1. Samples shall be representative, in all respects, of the material offered or intended, shall be supplied in such quantities and sizes as may be required for proper examination and tests, and shall be delivered to Engineer, prepaid, along with identification as to their sources and types of grades.
   2. Submit samples well in advance of anticipated use to permit the making of tests or examinations.

B. Samples will be checked for conformance with the design and for compliance with the Contract Documents.

C. Work shall be in accordance with the approved sample. The use of materials or equipment for which samples are requested or required to be submitted is not permitted until such time that the Engineer has completed his review.

1.17 MANUFACTURER'S INSTRUCTIONS

A. When specified in individual specification sections, submit printed instructions for delivery, storage, assembly, installation, start-up, adjusting, and finishing, to Engineer.

B. Indicate special procedures, perimeter conditions requiring special attention, and special environmental criteria required for application or installation. Provide manufacturer's instructions with shop drawings.

1.18 CERTIFICATIONS

A. Submit certifications of compliance indicated in the Contract Documents.

B. Certifications shall be complete and exact, they shall be properly authenticated by the written signature, in ink, of an owner, officer or duly authorized representative of the person, firm or organization issuing such certification and they shall guarantee that the materials or equipment are in complete conformance with the requirements of these specifications.

1.19 COLORS AND PATTERNS

A. Unless the precise color and pattern are specified, whenever a choice of color or pattern is available in a specified product, submit accurate color and pattern charts for Engineer's and Owner's review and selection.

1.20 MANUFACTURER'S SERVICE CENTER

A. The product of a manufacturer who does not maintain an adequate nearby service center and a sufficient stock of spare parts are subject to rejection by Engineer solely on that basis.

B. With each submission, submit information on manufacturer's facilities and give complete details of his service policies and capabilities, and a general idea of the stock of spare parts available. Submit this information in the form of a certification. Also include names, addresses and telephone numbers of at least three of the service center's present customers who are in the area of the project.

1.21 TEST RESULTS AND INSTALLATION

A. Whenever field startup services are specified, the Contractor shall obtain from the manufacturer and submit to the Engineer Manufacturer Startup Reports (MSR's). The report shall detail the results of the field visit and all special conditions resulting from the startup.

B. Whenever field or factory tests are required on materials, equipment and systems, such tests shall be performed and the test results submitted to Engineer in the form of a MSR.

C. Do not deliver to the project or incorporate into the work any materials or equipment for which Engineer has not completed his review and found same to be in general conformance with the Contract Documents.

D. Submit MSR's within thirty (30) calendar days after the date of the startup or factory test.

1.22 SPARE PARTS LIST

A. Prepare a list of all spare parts specified to be provided in other Sections. Compile the total list for the purposes of reviewing actual spare parts delivered versus spare parts specified to be provided. The list shall reference the Section, model number, and quantity to be provided.

PART 2 - PRODUCTS

NOT USED

PART 3 - EXECUTION

NOT USED

THIS SPACE LEFT INTENTIONALLY BLANK

CONTRACTOR'S COMPANY NAME
ADDRESS

SUBMISSION TRANSMITTAL FORM
CLIENT NAME: Riverhead Water District
PROJECT TITLE: Old Orchard Subdivision

H2M PROJECT NO.: RDWD 16-51

Product, Item, or System Submitted:			
Submission Date:		Submission Log No.:	
Specification Section:		Paragaph Reference:	
Contract Drawing Reference(s):			
Manufacturer's Name:			
Manufacturer's Mailing Address:			
Manufacturer's Contact Information:	*Name*	( ) *Tel. no.*	*Email*
Supplier's Name:			
Supplier's Mailing Address:			
Supplier's Contact Information:	*Name*	( ) *Tel. no.*	*Email*
This item is a substitution for the specified item:		____ No	____ Yes
Contrator's Approval Stamp with Signature & Date		Contractor's Brief Comments or Remarks (attach separate letter as needed): By making this submission, we represent that we have determined and verified all field measurements and dimensions, field construction criteria, site and building constraints in terms of limitations in moving the item into the enclosed space, materials, catalog and model numbers and similar data and that we have checked and coordinated this submission with other work at or adjacent to the installed location in accordance with the requirements contained in the Contract Documents.	

END OF SECTION

SECTION 014100 - REGULATORY REQUIREMENTS

PART 1 - GENERAL

1.01 SECTION INCLUDES

A. Codes

B. Governing agencies

C. Permits

1.02 CODES

A. Comply with the requirements of the various codes referred to in these Specifications. Such codes shall be the date of the latest revision in effect at the time of receiving bids.

B. If there is a conflict between local, state, and/or Federal regulatory requirements, seek a consultation with the State Department of Labor. Resolve conflicts to the satisfaction of the State Department of Labor prior to commencing work.

1.03 GOVERNING AGENCIES

A. All work shall conform to and be performed in strict accordance with all governing agencies such as, but not limited to:
   1. Occupational Safety and Health Act - OSHA
   2. State Department of Environmental Conservation
   3. State Building Code
   4. State Fire Code
   5. National Fire Protection Association - NFPA
   6. National Electrical Code
   7. State Plumbing Code
   8. New York State Energy Code
   9. County Department of Health
   10. Town Codes, Rules, Laws and Ordinances
   11. Sewer District Sewer Use Code
   12. Local Water District
   13. Electric Utility
   14. Gas Utility
   15. Village Codes

1.04 PERMITS AND INSPECTIONS

A. Representatives of the Owner shall have access to the work for inspection purposes. The Contractor shall provide facilities suitable to the Owner to facilitate inspections of the installed work.

B. Obtain and pay for all permits, fees, licenses, certificates, inspections and other use charges required in connection with the work.

1.05 COORDINATION WITH GAS/ELECTRIC/TELEPHONE/CABLE UTILITY COMPANY

A. Comply with the gas/electric/telephone/cable utility companies regarding excavation around or in the vicinity of existing facilities.

1.06 COORDINATION WITH WATER UTILITY

A. Comply with the water utility requirements for water and fire service connections. Obtain and pay for all necessary permits from the water utility. Obtain authority to connect to the existing water mains.
   1. Make necessary connections to existing public water mains under supervision of the water utility representative.

B. Pay the water utility's charges for the connections.

1.07 UTILITY WORK WITHIN STATE HIGHWAY RIGHT-OF-WAY

A. Utility Work, either overhead or underground, within the boundaries of the state highway right-of-way, shall conform with procedures set forth in the Department of Transportation publications "Department Rules and Regulations Governing the Accommodation of Utilities Within State Highway Right-of-Way (Part 131 - Title 17 Transportation) and "Issuance of Highway Work Permits" (Code 7.12-2).

PART 2 - PRODUCTS

NOT USED

PART 3 - EXECUTION

NOT USED

END OF SECTION

SECTION 015719 - TEMPORARY ENVIRONMENTAL CONTROLS

PART 1 - GENERAL

1.01 SECTION INCLUDES

A. Control of environmental pollution and damage that the Contractor must consider for air, water, and land resources in preparing a bid and while constructing the project. This Section includes management of site aesthetics, noise, solid and liquid waste and wastewater, and other pollutants that may be generated by the Contractor.

B. Include all costs associated with environmental protection as specified herein and as specified in other Sections of these specifications in the total price bid.

1.02 DEFINITIONS

A. Environmental pollution and damage is defined as the presence of chemical, physical, or biological elements or agents which:
   1. Adversely effect human health or welfare,
   2. Unfavorably alter ecological balances of importance to human life,
   3. Impact wetlands,
   4. Effect other species of importance to man, or;
   5. Degrade the utility of the environment for aesthetic, cultural, and historical purposes.

B. Definitions of Pollutants:
   1. Sediment: Soil and other debris that has been eroded and transported by runoff water.
   2. Solid Waste: Rubbish, debris, garbage, and other discarded solid materials resulting from industrial, commercial, and agricultural operations and from community activities.
   3. Rubbish: Combustible and noncombustible wastes such as paper, boxes, glass and crockery, metal and lumber scrap, tin cans, and bones.
   4. Debris: Combustible and noncombustible wastes, such as leaves, tree trimmings, ashes, and waste materials resulting from construction or maintenance and repair work.
   5. Chemical Waste: Petroleum products, bituminous materials, salts, acids, alkalies, herbicides, pesticides, organic chemicals, and inorganic wastes.

C. Sanitary Wastes:
   1. Sewage: Domestic sanitary sewage and human and animal waste.
   2. Garbage: Refuse and scraps resulting from preparation, cooking, dispensing, and consumption of food.

PART 2 - PRODUCTS

NOT USED

PART 3 - EXECUTION

3.01 PROTECTION OF ENVIRONMENTAL RESOURCES

A. Protect environmental resources within the project boundaries and those affected outside the limits of permanent work during the entire period of this Contract. Confine activities to areas defined by the Contract Documents.

B. <u>Protection of Land Resources:</u> Prior to construction, identify all land resources to be preserved within the work area. Do not remove, cut, deface, injure, or destroy land resources including trees, shrubs, vines, grasses, top soil, and land forms without permission from the Engineer. Do

not fasten or attach ropes, cables, or guys to trees for anchorage unless specifically authorized, or where special emergency use is permitted.

C. Work Area Limits: Prior to any construction, mark the areas that require work to be performed under this Contract. Mark or fence isolated areas within the general work area that are to be saved and protected. Protect monuments, works of art, and markers before construction operations begin. Convey to all personnel the purpose of marking and protecting all necessary objects.

D. Protection of Landscape: Protect trees, shrubs, vines, grasses, land forms, and other landscape features shown on the drawings to be preserved by marking, fencing, or using any other approved techniques.
   1. Box and protect from damage existing trees and shrubs to remain on the construction site.
   2. Immediately repair all damage to existing trees and shrubs by trimming, cleaning, and painting with antiseptic tree paint.
   3. Do not store building materials or perform construction activities closer to existing trees or shrubs than the farthest extension of their limbs.

E. Reduction of Exposure of Unprotected Erodible Soils: Plan and conduct earthwork to minimize the duration of exposure of unprotected soils. Clear areas in reasonably sized increments only as needed to use. Form earthwork to final grade as shown. Immediately protect side slopes and back slopes upon completion of rough grading.
   1. Temporary Protection of Disturbed Areas: Construct diversion ditches and berms to retard and divert runoff from the construction site to protected wetlands areas as defined in the Clean Water Act and federal, state and local regulations.
   2. Erosion and Sedimentation Control Devices:
      a. Construct or install all temporary and permanent erosion and sedimentation control features as shown or specified in the Contract Documents and as required by the Owner pursuant to direction of the regulatory authority.
      b. Maintain temporary erosion and sediment control measures such as berms, dikes, drains, hay bales, erosion control fencing, sedimentation basins, grassing, and mulching, until permanent drainage and erosion control facilities are completed and operative.
   3. Manage borrow areas on and off Owner property to minimize erosion and to prevent sediment from entering nearby property, watercourses and local streets.
   4. Manage and control spoil areas on and off Owner property to limit spoil to areas shown on the Environmental Protection Plan and prevent erosion of soil or sediment from entering nearby property, watercourses or streets.
   5. Protect adjacent areas from degradation by temporary excavations and embankments.

F. Handle and dispose of solid wastes in such a manner that will prevent contamination of the environment.
   1. Place solid wastes (excluding clearing debris) in containers that are emptied on a regular schedule.
   2. Transport all solid waste off Owners' property and dispose of waste in compliance with Federal, State, and local requirements.
   3. Store chemical waste away from the work areas in corrosion resistant containers and dispose of waste in accordance with Federal, State, and local regulations.
   4. Handle discarded materials other than those included in the solid waste category as directed by the Engineer.

G. Protection of Water Resources: Keep construction activities under surveillance, management, and control to avoid pollution of surface and ground waters and sewer systems. Implement management techniques to control water pollution by the listed construction activities that are included in this Contract.

H. Washing and Curing Water: Do not allow wastewater directly derived from construction activities to enter water areas. Collect and place wastewater in retention ponds allowing the suspended material to settle, the pollutants to separate, or the water to evaporate.

I. Control movement of materials and equipment during construction to prevent violation of water pollution control standards of the Federal, State, or local government.

J. Monitor water areas affected by construction.

K. Protection of Fish and Wildlife Resources:
   1. Keep construction activities under surveillance, management, and control to minimize interference with, disturbance of, or damage to fish and wildlife.

L. Protection of Air Resources: Keep construction activities under surveillance, management, and control to minimize pollution of air resources.
   1. Burning is not permitted on the job site. Keep activities, equipment, processes, and work operated or performed, in strict accordance with the State and Federal emission and performance laws and standards.
   2. Maintain ambient air quality standards set by the Environmental Protection Agency and State, for those construction operations and activities specified.

M. Particulates: Control dust particles, aerosols, and gaseous by-products from all construction activities, processing, and preparation of materials (such as from asphaltic batch plants) at all times, including weekends, holidays, and hours when work is not in progress.

N. Particulates Control: Maintain all excavations, stockpiles, haul roads, permanent and temporary access roads, plant sites, spoil areas, borrow areas, and all other work areas within or outside the project boundaries free from particulates which would cause a hazard or a nuisance. Sprinkle, chemical treatment of an approved type, light bituminous treatment, baghouse, scrubbers, electrostatic precipitators, or other methods are permitted to control particulates in the work area.

O. Hydrocarbons and Carbon Monoxide: Control monoxide emissions from equipment to Federal and State allowable limits.

P. Odors: Control odors of construction activities and prevent obnoxious odors from occurring.

Q. Reduction of Noise: Minimize noise using every action possible. Perform noise-producing work in less sensitive hours of the day or week as directed by the Engineer. Maintain noise-produced work at or below the decibel levels and within the time periods specified in accordance with OSHA and local ordinances, whichever is more restrictive.
   1. Perform construction activities involving repetitive, high-level impact noise only between 8:00 a.m. and 5:00 p.m unless otherwise permitted by local ordinance or by the Engineer.
   2. Repetitive impact noise on the property shall not exceed the following dB limitations:
   3. Provide sound-deadening devices on equipment and take noise abatement measures that are necessary to comply with the requirements of this Contract, consisting of, but not limited to, the following:
      a. Use shields or other physical barriers to restrict noise transmission.
      b. Provide soundproof housings or enclosures for noise-producing machinery.
      c. Use efficient silencers on equipment air intakes.
      d. Use and maintain efficient intake and exhaust mufflers on internal combustion engines.
      e. Line hoppers and storage bins with sound deadening material.

f. Conduct truck loading, unloading, and hauling operations so that noise is kept to a minimum.

END OF SECTION

SECTION 016100 - BASIC PRODUCT REQUIREMENTS

PART 1 - GENERAL

1.01 SECTION INCLUDES

A. This Section includes the general requirements for products that are to be furnished, installed, or otherwise incorporated into the project.

1.02 QUALITY ASSURANCE APPLIES TO ALL PRODUCTS

A. In addition to the Contractor's warrantees and guarantees on materials and equipment required under the General Conditions of the Contract and the Technical Specifications contained hereinafter, the Contractor shall also be responsible for all materials, equipment, and products that have or is planned to be incorporated into the work.
   1. The Contractor shall be responsible for the finished work and that it accurately and completely complies with these Contract Documents.
   2. The Contractor shall be responsible for work performed by subcontractors, equipment suppliers, and material vendors.
   3. The Contractor shall be satisfied as to the product's performance before it is ordered for installation. At the Contractor's option, he/she shall have tested each product to determine compliance with these specifications.

B. The Engineer may check all or any portion of the work and the Contractor shall afford all necessary assistance to the Engineer in carrying out such checks.
   1. Such checking by the Engineer shall not relieve the Contractor of any responsibilities for the accuracy or completeness of the work.
   2. Such checking is a courtesy service being provided by the Owner and does not relieve the Contractor of his/her responsibilities under this Construction Contract.

C. Should a dispute arise as to the quality of workmanship, equipment or material performance, then the final decision regarding acceptability with these Contract Documents shall be that of the Owner.

D. At the request of the Engineer, the Contractor shall promptly provide the services of a competent representative of the manufacturer at the project site, fully equipped and prepared to answer questions, perform tests, make adjustments and to prove compliance with the Contract Documents free of all additional charges. Proof of compliance shall be the responsibility of the Contractor, and such special visits to the project site by the manufacturer shall not be eligible under any cash allowances or stipulated man-hours necessary to startup the system and/or train the Owner as may be specified in the Technical Specifications.

1.03 QUALITY ASSURANCE - EQUIPMENT

A. All material furnished shall be new, and guaranteed free from defects in workmanship, installation, and design.

B. Equipment shall be products of manufacturers who produce evidence of their ability to promptly furnish any and all interchangeable replacement parts as may be needed at any time within the expected life of the equipment.

PART 2 - PRODUCTS

2.01 MATERIALS AND EQUIPMENT

A. The Owner reserves the right to reject any material or equipment manufacturer who, although he appears to be qualified and meets the technical requirements, does not provide satisfactory evidence indicating adequate and prompt post-installation repair and maintenance service, as required to suit the operational requirements of the Owner.

B. Whenever it is required that the Contractor furnish materials or manufactured articles or shall do work for which no detailed specifications are set forth, the materials or manufactured articles shall be of the best grade in quality and workmanship obtainable on the market from firms of established good reputation, or, if not ordinarily carried in stock, shall conform to the usual standards for first-class materials or articles of the kind required.

C. Perform work in full conformity and harmony with the intent to secure the best standard of construction and equipment of the work as a whole or in part.

D. Items of any one type of material or equipment shall be the product of a single manufacturer.
   1. For ease of the Owner in maintaining and obtaining service for equipment and for obtaining spare parts from as few places as possible, to the maximum extent possible, use equipment of a single manufacturer.
   2. The Engineer reserves the right to reject any equipment from various manufacturers if suitable equipment can be secured from fewer manufacturers and to require that source of materials be unified to the maximum extent possible.

E. Substitute equipment shall not be fabricated nor installed until after written decision to accept request is received from the Engineer.

PART 3 - EXECUTION

3.01 PREPARATION

A. Prior to work under any Section, carefully inspect the existing work and verify that it is complete to the point where the work under that Section may properly commence.

B. Verify that all work can be installed in strict accordance with the drawings and the approved shop drawings. Immediately report discrepancies to Engineer.

C. Do not proceed with the work under any Section until these conditions are obtained.

3.02 INSTALLATION

A. Furnish and install materials and equipment in accordance with the instructions of the applicable manufacturer, fabricator or processors, except as otherwise provided in the Contract Documents.

B. All work shall be done in a workmanlike manner and set to proper lines and grades. The work shall be square, plumb and/or level as the case may be.

C. Where performance criteria are specified, do all work necessary to attain the required end results.

3.03 FIELD QUALITY CONTROL

A. Neither observations by Engineer nor inspections, tests or approvals by other persons shall relieve the Contractor from his obligations to perform the work in accordance with the requirements of the Contract Documents.

B. If the Contract Documents, laws, ordinances, rules, regulations or orders of any public authority having jurisdiction require any work to specifically be inspected, tested or approved by some public body, the Contractor shall assume full responsibility therefore, pay all costs in connection therewith, and furnish the Engineer with the required certificates of inspection, testing or approval.

3.04 UNCOVERING WORK

A. Unless otherwise specified or directed by Engineer, no work shall be covered until it has been observed, tested, photographed, measured, and authorized to be covered by Engineer.

B. Tie distances to above ground physical structures as reference points to all underground utilities, conduits, pits, manholes, valves, and pipelines shall be obtained by the Contractor prior to covering the work. Immediately comply with the Engineer's direction to uncover the work if tie distances were not obtained.

C. If any work has been covered with Engineer's consent and Engineer considers it necessary or advisable that covered work be observed or tested, the Contractor, at Engineer's request, shall uncover, expose or otherwise make available for observation, or testing as Engineer may require, that portion of the work in question, furnishing all necessary labor, material and equipment.
   1. If it is found that such work is defective, the Contractor shall bear all the expenses of such uncovering, exposure, observation, and testing of satisfactory reconstruction, including compensation for additional engineering services and an appropriate deductive change order shall be issued.

3.05 DEFECTIVE WORK

A. The repair, removal, replacement and correction of defective work is a part of this Contract and shall be promptly performed in accordance with the requirements set forth in the General Conditions or other portions of the Contract Documents. All costs in connection with the correction of defective work shall be borne by the Contractor.

B. Products that fail to maintain the performance or other salient requirements of the Contract Documents, shows undue wear, or other deleterious effects during the maintenance period, shall be considered defective.

END OF SECTION

SECTION 016500 - PRODUCT DELIVERY, STORAGE AND HANDLING

PART 1 - GENERAL

1.01 SECTION INCLUDES

A. The Section includes the transportation, handling, storage and protection of products that are to be incorporated into the work.

B. The procedures for turning equipment over to the Owner for installation by others is also included herein.

1.02 GENERAL

A. Items shall be delivered as complete assemblies direct from the manufacturer with all internal wiring, piping, valving, and control devices intact except where partial disassembly is required by transportation regulations, protection of components, or where physical constraints may exist or be created for the setting of the item.

B. Coordinate the disassembly and reassembly requirements with the manufacturer. Determine the need and extent of reassembly prior to bid.
   1. All labor, material and equipment costs associated with the disassembly and reassembly of the product shall be included in the Contract Price.
   2. Where reassembly of equipment is necessary, then the manufacturer shall provide reassembly instruction at the project site.
   3. A technician shall be present during the entire reassembly procedure and the manufacturer shall certify, in writing, that the unit was reassembled properly in accordance with instructions provided by the manufacturer and that all as-specified warranties remain in effect.
   4. The manufacturer's reassembly inspection time shall be in addition to the field service time specified and shall be included in the Contract Price. This time shall not be eligible for payment under any cash allowance item.

C. In the case where equipment is to be installed by others, then the supplying contractor shall be responsible for its reassembly. If reassembly is necessary and the unit(s) are to be set inside an enclosure or building, reassemble the equipment inside said enclosure. The equipment once reassembled shall be turned over to the installing contractor as specified below.

1.03 PACKING

A. Transport products in containers, crates, boxes or similar means such that the products are protected against damage that may occur during transportation.

B. All parts shall be packaged separately or in container where parts of similar systems are grouped.

C. Part numbers shall be indicated on the individual part. Use indelible ink to mark part numbers.

D. All equipment shipments shall be included with a parts list showing a description (name) of the part and the manufacturer's part number.
   1. The parts list shall be shipped in a plastic zippered envelope with the words "Parts List" lettered on it in indelible ink.
   2. The parts list shall be placed inside the shipping container so that it is on the top of the contents.

E. Equipment shall be shipped with storage, handling and installation instructions.

1. The Engineer reserves the right to withhold payment for equipment delivered to the site until such time as the storage, handling and installation instructions are supplied by the manufacturer.
2. In the case where operation and maintenance manuals have been provided by the manufacturer, which includes the installation instructions, then the installation instructions shall also be included with the equipment shipment.

F. All control panels shall be wood crated.
1. All sides of the control panel shall be covered with 3/4" plywood.
2. The control panel number or name shall be printed on all sides of the crate in 1' high black lettering.
3. The manufacturer's name, Contractor's name and project name shall also be printed on the front of the crate.
4. All control panels and centers shall be packaged with three (3) copies of the approved wiring diagram inside the control panel enclosure in a separate plan holder attached to the inside door. The words "APPROVED FOR CONSTRUCTION" shall be indicated on each page of the wiring diagram.

G. Delicate instruments and devices, reagents, chemicals, and glassware shall be shipped in packaging normally provided by the manufacturer.

H. The Contractor shall require the manufacturer to be responsible for the proper packing of all products.

1.04 SHIPPING AND DELIVERY

A. Product deliveries shall be accompanied with a bill of lading indicating the place of origination and the Contractor's purchase order number.

B. Inspect shipments immediately upon delivery, to assure compliance with requirements of the Contract Documents and those products are undamaged.

C. Promptly remove damaged material and unsuitable items from the job site.

D. Provide equipment and personnel to handle products by methods to prevent soiling; disfigurement or damage.

1.05 STORAGE

A. Store sensitive products and all spare parts in weather tight, climate controlled enclosures in an environment favorable to product.

B. Store and protect products in accordance with the manufacturer's instructions.

C. All other products that are to be installed underground or products such as pipe, valves, and fittings shall be stored outdoors but shall be blocked off the ground and covered with impervious sheet coverings.

D. Store fabricated products above the ground on blocking or skids.

E. Store loose granular materials in well-drained areas on solid surfaces to prevent mixing with foreign matter.

F. Provide adequate ventilation to avoid condensation.

G. In accordance with manufacturer's instructions protect bearings, couplings, shafts, rotating components, and assemblies. Protection of said equipment shall be continuous until the time the equipment is placed into permanent service.

H. Arrange storage in a manner to provide easy access for inspection. Make periodic inspections of stored products to assure that products are maintained under specified conditions, and free from damage or deterioration.

I. Do not store volatile liquids in any building on site.

J. Storage of products shall be the responsibility of the supplying contractor. The installing contractor shall take all necessary precautions to protect the equipment being furnished by others.

K. Store with seals and labels intact and legible.

1.06 EQUIPMENT INSTALLED BY OTHERS

A. All products, except products noted on the Drawings or specified, shall be furnished and installed under this Contract.
   1. Only noted or specified products shall be furnished under this Contract for installation by others.
   2. If it is not noted on the Drawings or specified, then the product shall be furnished and installed under the Contract.

B. The Contractor shall furnish these products to the Owner. These products shall be stored as specified above.

C. The Owner will then advise the installing contractor that the product(s) are ready for installation.
   1. In the case where the product is stored in a proper enclosure, but not stored inside the building to be constructed under this project, then the installing contractor shall move the product into the building to a location adjacent to the final location shown on the Drawings.
   2. In all cases, the installing contractor shall be responsible for moving from storage, uncrating, anchoring, mounting and installing the product as required by the Contract Documents.

D. The Contractor and installing contractor(s) shall be present at the time the equipment is turned over to the Owner. Immediately thereafter, the Owner will turn the product over to the installing contractor for installation.

E. The Owner, Contractor, Engineer and the installing contractor shall inspect the condition of the product at this time.
   1. Any defects in the product will be noted and the Contractor will be advised to make all repairs immediately.
   2. The installing contractor shall still be required to install the product if the damage is deemed cosmetic by the Engineer.
   3. The manufacturer's installation instructions or wiring diagram shall be turned over to the installing contractor at this time by the Contractor.
   4. Any damage occurring to the product during moving, setting and mounting the unit(s) shall be the responsibility of the installing contractor.
   5. The Contractor is advised to take photographs to document the condition prior to it being turned over to the installing contractor.
   6. The installing contractor is advised to take photographs to document the condition prior to its acceptance.

F. The supplied unit(s) remain the property of the Contractor until final acceptance of the work.

G. Any damage caused to the unit(s) due to improper installation, workmanship, and non-compliance with the manufacturer's written installation instructions shall be the responsibility of the contractor who caused said damage. The burden of proof shall rest with the supplying Contractor.

H. In the event the Contractor discovers misuse, abuse or improper installation of the unit(s) by the installing contractor, then he shall immediately notify the Engineer in writing. The Engineer will investigate the accusations and make a determination. The Engineer's determination shall be binding and agreed to by both parties.

I. If the Engineer's determination substantiates the accusations of the Contractor, then the Contractor shall install the unit(s), the costs for which will be paid for as extra work. All costs associated with the extra work change order, including engineering and attorney fees of the Owner and Contractor will be deducted from money due the installing contractor.

1.07 PROTECTION OF WORK

A. The Contractor shall protect the installed work. All costs for protection shall be borne by the Contractor. Provide coverings as necessary to protect installed products from damage, from traffic and subsequent construction operations. Remove when no longer needed.

B. Cover and protect equipment from dust, moisture or physical damage. Protect finished floor surfaces prior to allowing equipment or materials to be moved over such surfaces. Maintain finished surfaces clean, unmarred and suitably protected until accepted by the Owner.

C. Additional time required to secure replacements and to make repairs will not be considered by the Engineer to justify any extension in the Contract Time of Completion. In the event of the damage, promptly make replacement and repairs to the approval of the Engineer at no additional costs.

PART 2 - PRODUCTS

NOT USED

PART 3 - EXECUTION

NOT USED

END OF SECTION

SECTION 017800 - CLOSEOUT SUBMITTALS

PART 1 - GENERAL

1.01 SUBMITTALS

A. Submit the following items to the Engineer with the final application for payment:
   1. Final Application for Payment prepared by the Engineer for Contractor's execution showing final amount of Contract including change orders.
   2. Maintenance Bond prepared in accordance with the Contract or General Conditions.
   3. Utility company signoffs and inspection approvals, if applicable.
   4. Federal, state, county, town and local signoffs and inspection approvals, where applicable.
   5. Certified Payroll records with affidavits of labor.

B. All documents shall be complete, signed, dated, and notarized (where applicable) and be subject to the Engineer's acknowledgment of receipt or approval.

PART 2 - PRODUCTS

NOT USED

PART 3 - EXECUTION

NOT USED

END OF SECTION

SECTION 312323 - BACKFILLING

PART 1 - GENERAL

1.01 SECTION INCLUDES

A. Site piping backfilling to sub-grade elevations.

B. Site filling and backfilling.

C. Consolidation and compaction.

1.02 RELATED SECTIONS

A. Section 315000 - Excavation Support & Protection.

1.03 REFERENCES

A. ANSI/ASTM C136 - Method for Sieve Analysis of Fine and Coarse Aggregates.

B. ANSI/ASTM D1557 - Test Methods for Moisture-Density Relations of Soils and Soil-Aggregate Mixtures Using 10 lb (4.54 kg) Rammer and 18-inch (457-mm) Drop.

1.04 QUALITY ASSURANCE

A. Do not backfill wet or frozen materials.

PART 2 - PRODUCTS

2.01 FILL MATERIALS

A. Type C - Sand: Natural river or bank sand; washed, free of silt, clay, loam, friable or soluble materials, or organic matter; graded in accordance with ANSI/ASTM C136, within the following limits:

Sieve Size	**Percent Passing**
No. 4 (4.75 mm)	100
No. 14 (1.18 mm)	10 - 100
No. 50 (0.30 mm)	5 - 90
No. 100 (0.15 mm)	4 - 30
No. 200 (0.075 mm)	0 - 1

B. Type D - Subsoil: Reused, excavated material, graded, free of lumps, rocks and gravel larger than 3 inches (75 mm) in size, debris and contaminants.

PART 3 - EXECUTION

3.01 EXAMINATION

A. Verify existing conditions and substrate.

B. Verify fill materials to be reused are acceptable.

C. Verify items to be buried during backfilling process have been inspected prior to backfilling.

D. Verify subgrade has been properly compacted and is ready to receive work of this section.

3.02 PREPARATION

A. Compact subgrade to 95 percent maximum dry density in accordance with ANSI/ASTM D1557.

B. Cut out soft areas of subgrade not capable of in situ compaction. Backfill with Type C fill and compact to density equal to or greater than requirements for subsequent backfill material.

3.03 COMPACTION - METHODS

A. Trench compaction on all water main trenches shall be by mechanical tamping methods. Jetting of trenches will not be permitted.

3.04 BACKFILLING - GUIDELINES

A. Backfill areas to contours and elevations with unfrozen materials.

B. Systematically backfill to allow maximum time for natural settlement. Do not backfill over porous, wet, frozen or spongy materials.

C. Place and compact materials in continuous layers not exceeding 6 inches (150 mm) compacted density.

D. All backfilled materials shall be compacted to 95 percent maximum dry density in accordance with ANSI/ASTM D1557. Maintain optimum moisture content to attain required density.

E. Employ a placement method that does not disturb or damage structures or other items against which material is backfilled.

F. Backfill against supported structures. Do not backfill against unsupported structures. Backfill simultaneously on each side of structure.

G. Make grade changes gradual. Blend slope into level areas.

H. Remove surplus backfill materials from site.

I. Remove temporary sheeting, as backfilling progresses, under provisions of Section 315000.

3.05 FIELD QUALITY CONTROL

A. Perform field tests and analysis of fill material in accordance with ANSI/ASTM D1557. If tests indicate work does not meet specified requirements, remove work, replace and retest at no cost to Owner.

3.06 PROTECTION

A. Recompact fills subjected to vehicular traffic.

END OF SECTION

SECTION 312333 - TRENCHING

PART 1 - GENERAL

1.01 SECTION INCLUDES

A. Trench excavation for piping and utilities.

B. Bedding for piping and utilities.

C. Backfilling and compaction.

1.02 RELATED SECTIONS

A. Section 315000 - Excavation Support & Protection.

1.03 REFERENCES

A. ANSI/ASTM C136 - Method for Sieve Analysis of Fine and Coarse Aggregates.

B. ANSI/ASTM D1557 - Test Methods for Moisture-Density Relations of Soils and Soil-Aggregate Mixtures Using 10 lb (4.54 kg) Rammer and 18-inch (457 mm) Drop.

1.04 QUALITY ASSURANCE

A. Do not excavate wet or frozen materials without written approval from the Engineer.

B. Do not backfill over or with wet or frozen materials.

C. Provide safety barricades around open excavations.

1.05 COORDINATION

A. Coordinate work under provisions of Section 013100.

B. Coordinate trenching with installation of pipe or conduit.

C. Coordinate trenching with installation and removal of sheeting.

PART 2 - PRODUCTS

2.01 MATERIALS

A. Bedding: Natural river or bank sand; washed; free of silt, clay, loam, friable or soluble materials, or organic matter; graded in accordance with ANSI/ASTM C136; within the following limits:

Sieve Size	**Percent Passing**
No. 4 (4.75 mm)	100
No. 16 (1.18 mm)	10-100
No. 50 (0.30 mm)	5-90
No. 100 (0.15 mm)	4-30
No. 200 (0.075 mm)	0-1

B. Subsoil: Reused, excavated material, graded, free of lumps, rocks and gravel larger than 3 inches (75 mm) in size, debris and contaminants.

PART 3 - EXECUTION

3.01 EXAMINATION

A. Verify existing site conditions and substrate.

B. Verify fill materials to be reused are acceptable.

C. Verify items to be buried during backfilling process have been inspected prior to backfilling.

3.02 PREPARATION

A. Identify required lines, levels, contours, and datum.

B. Maintain and protect existing utilities remaining which pass through work area.

C. Protect plant life, lawns, rock outcropping and other features remaining as a portion of final landscaping.

D. Protect benchmarks, existing structures, fences, sidewalks, paving and curbs from excavation equipment and vehicular traffic. Any item damaged by the contractor shall be promptly repaired at the contractor's expense.

E. Protect above and below grade utilities which are to remain.

F. Cut out soft areas of subgrade not capable of in situ compaction. Backfill with subsoil fill and compact to density equal to or greater than requirements for subsequent backfill material.

3.03 EXCAVATION

A. Excavate subsoil required for piping.

B. Cut trenches to the dimensions shown on the plans.

C. Excavation shall not interfere with normal 45 degree bearing splay of foundations.

D. Hand trim excavation. Hand trim for bell and spigot pipe joints. Remove loose matter.

E. Maintain sides and slopes of excavations and trenches in a safe condition until completion of backfilling. Comply with Code of Federal Regulations Title 29-Labor, Part 1926-OSHA Standards.

F. Remove lumped subsoil, boulders, and rock.

G. For trenches made in solid rock, excavate to a depth of 1 foot (300 mm) below the proposed pipe invert.

H. Correct unauthorized excavation at no cost to Owner in accordance with Section 312333.

I. Stockpile excavated material in area designated on site and remove excess material not being used from site. Remove excavated material from site.

J. All trenches deeper than 5 feet (1.5 m) shall require sheeting. Sheeting is to be installed under provisions of Section 315000.

3.04 BACKFILLING

A. Support pipe and conduit during placement and compaction of fill material.

B. For trenches made in solid rock, place an additional 1 foot (300 mm) of fill material under pipe or conduit.

C. Place fill material to the dimensions and limits as shown on the plans.

D. Compact fill material to 95 percent maximum dry density in accordance with ANSI/ASTM D1557. Maintain optimum moisture content to attain required density.

E. Place fill material simultaneously on both sides of the pipe or conduit. Backfill to the dimensions and limits shown on the plans with reused subsoil.

F. Systematically backfill to allow maximum time for natural settlement. Do not backfill over porous, wet, frozen or spongy subgrade surfaces.

G. Place and compact material in continuous layers not exceeding 6 inches (150 mm) compacted depth.

H. Employ a placement method that does not disturb or damage conduit or pipe.

3.05 FIELD QUALITY CONTROL

A. Perform field tests and analysis of fill material in accordance with ANSI/ASTM D1557.

B. If tests indicate work does not meet specified requirements, remove work, replace and retest at no cost to Owner.

3.06 CLEANING

A. Remove surplus backfill materials from site.

3.07 PROTECTION

A. Recompact fills subjected to vehicular traffic.

END OF SECTION

SECTION 315000 - EXCAVATION SUPPORT & PROTECTION

PART 1 - GENERAL

1.01 SECTION INCLUDES

A. Wood and steel sheeting.

B. Sheeting box.

1.02 RELATED SECTIONS

A. Section 312323 - Backfilling.

B. Section 312333 - Trenching.

1.03 REFERENCES

A. Occupational Safety and Health Standards - Excavations; Final Rule (29 CFR Part 1926) - OSHA Standards.

1.04 QUALITY ASSURANCE

A. Perform all work of this section in accordance with OSHA Standards and approved shop drawings.

1.05 COORDINATION

A. Coordinate work under provisions of Section 013100.

B. Coordinate work with all other sections requiring temporary sheeting and bracing.

PART 2 - PRODUCTS

2.01 MATERIALS

A. Wood Sheeting: Hardwood species of size and dimensions capable of being driven to the required depths and capable of supporting excavation sides and soil pressures when braced; free from wormholes, wind shakes, loose knots, decayed or unsound portions or defects which would impair its strength or tightness; 2 inches (50 mm) thick minimum.

B. Steel Sheeting: Corrugated "Z" shape cross-section; of size and dimensions capable of being driven to the required depths and capable of supporting excavation sides and soil pressures when braced; structurally sound; special shapes for corner construction and transition points.

C. Sheeting Boxes: Steel, of size and dimensions capable of supporting excavation sides and soil pressures; structurally sound.

PART 3 - EXECUTION

3.01 EXAMINATION

A. Verify existing substrate and site conditions.

B. Verify elevations and grades are as indicated on the plans.

C. Verify proposed locations of excavations are as indicated on the plans.

3.02 PREPARATION

A. Excavate to a depth no greater than 4 feet (1.2 m) from existing grade.

B. Assemble and drive the sheeting in accordance with approved shop drawings.

3.03 INSTALLATION - SHEETING

A. Drive sheeting in place to thoroughly support both sides of the excavation using a sheeting hammer. Use a steam or pneumatic hammer for steel sheeting.

B. Water jetting of sheeting will not be permitted. Do not loosen adjacent ground which might result in collapse.

C. Install walls and braces or shores tight and in accordance with approved shop drawings.

3.04 INSTALLATION - SHEETING BOX

A. Place box in trench utilizing a means which will not damage structural integrity of the box.

B. Excavate ahead of the sheeting box only enough to advance the sheeting box and only immediately prior to moving the sheeting box.

C. Backfill on both sides of the sheeting box as it is moved.

3.05 REMOVAL OF SHEETING

A. Remove sheeting only as backfilling progresses.

B. Carefully remove sheeting such that compacted backfill is not displaced. Add additional backfill to the areas vacated by the sheeting.

C. All sheeting is to be removed from the site once its use is no longer required.

3.06 CLEANING

A. Clean site of any debris from work of this section

END OF SECTION

SECTION 321123 - AGGREGATE BASE COURSE

PART 1 - GENERAL

1.01 SECTION INCLUDES

A. Recycled concrete aggregate base course.

1.02 REFERENCES

A. ANSI/ASTM C88 - Test Method for Soundness of Aggregates by Use of Sodium Sulfate or Magnesium Sulfate.

B. ANSI/ASTM C136 - Sieve Analysis of Fine and Coarse Aggregates.

C. ANSI/ASTM D1557 - Test Methods for Moisture-Density Relations of Soils and Soil-Aggregate Mixtures Using 10 lb Rammer and 18-inch Drop.

D. ASTM D4318 - Test Method for Liquid Limit, Plastic Limit, and Plasticity Index of Soils.

1.03 DELIVERY, STORAGE AND HANDLING

A. Do not handle aggregate in any manner which will cause segregation of large or fine particles.

PART 2 - PRODUCTS

2.01 MATERIALS

A. Aggregate Base Course: Angular, crushed, recycled concrete; free of shale, clay, friable materials and debris; graded in accordance with ANSI/ASTM C136 within the following limits:

Sieve Size		**Percent Passing**
1½ inches	(38 mm)	100
1 inch	(25 mm)	90-100
½ inch	(13 mm)	65-85
3/8 inch	(9 mm)	55-75
No. 4	(4.75 mm)	40-55
No. 8	(2.36 mm)	30-45
No. 16	(1.18 mm)	22-36
No. 30	(0.60 mm)	16-27
No. 40	(0.30 mm)	12-19
No. 100	(0.15 mm)	7-13
No. 200	(75 micro m)	3-7

B. Material retained on the 1/2 inch sieve is coarse aggregate.

C. Coarse aggregate shall not have more than 10 percent by weight of flat or elongated pieces. A flat or elongated piece is defined as being three times greater in the largest dimension as compared to its least dimension.

D. The portion of the aggregate base course which passes the No. 40 screen shall have a plasticity index of one as tested in accordance with ASTM D4318.

PART 3 - EXECUTION

3.01 EXAMINATION

A. Verify elevations of subgrade are as indicated on the plans.

B. Verify that subgrade is properly compacted and ready to receive work of this section.

3.02 PREPARATION

A. Fine grade and compact subgrade to 95 percent maximum dry density in accordance with ANSI/ASTM D1557.

3.03 AGGREGATE PLACEMENT

A. Spread course aggregate over prepared subgrade to a total compacted thickness as indicated on the plans.

B. Place aggregate in 3 inch layers and compact by roller.

C. Level and contour surfaces to elevations and gradients indicated.

D. Add small quantities of fine aggregate to coarse aggregate as appropriate to assist compaction.

E. Compact placed aggregate materials to achieve 95% maximum dry density in accordance with ANSI/ASTM D1557. Maintain optimum moisture content to attain required density.

F. Add water to assist compaction. If excess water is apparent, remove aggregate and aerate to reduce moisture content.

G. Use mechanical vibrating tamping in areas inaccessible to compaction equipment.

H. New pavement must be placed on the properly compacted aggregate base course within 24 hours of final compaction. If aggregate base course is left open for more than 24 hours, recompact and retest in accordance with ANSI/ASTM D1557.

3.04 TOLERANCES

A. Maximum Variation from Flatness: 1/4 inch measured with 10 foot straight edge.

B. Maximum Variation from Scheduled Compacted Thickness: 1/4 inch

C. Maximum Variation from True Elevation: 1/4 inch

3.05 FIELD QUALITY CONTROL

A. Perform compaction testing in accordance with ANSI/ASTM D1557.

B. If tests indicate work does not meet specified requirements, remove work, replace and retest at no cost to Owner.

END OF SECTION

SECTION 321216 - ASPHALT PAVING

PART 1 - GENERAL

1.01 SECTION INCLUDES

A. Asphaltic concrete paving, wearing and binder course for repair of road for utility installation.

1.02 RELATED SECTIONS

A. Section 321123 - Aggregate Base Courses.

1.03 REFERENCES

A. AI MS-2 - Mix Design Methods for Asphalt Concrete and Other Hot Mix Types.

B. AI MS-8 - Asphalt Paving Manual.

C. ASTM D242 - Mineral Filler for Bituminous Paving Mixtures.

D. ASTM D546 - Test Method for Sieve Analysis of Mineral Filler for Road and Paving Materials.

1.04 SUBMITTALS

A. Submit under provisions of Section 013300.

B. Supplier: Submit name of asphalt supplier to be used on the project prior to placement of any asphalt on the project.

C. Design Data: Submit asphalt mix design for each asphalt type to be used.

D. Testing Firm: Submit name of testing firm.

1.05 QUALITY ASSURANCE

A. Obtain materials from the same supplier throughout the duration of the project.

B. Do not alter from mix design requirements.

1.06 DELIVERY, STORAGE AND HANDLING

A. Deliver, store and handle products to the site under provisions of Sections 016500.

B. Deliver asphalt in sealed, tight, metal containers covered with suitable material to protect the asphalt from the elements.

C. Lightly lubricate the inside surface of the container with a thin oil or soap solution before loading asphalt.

D. All containers must be cleaned of all foreign materials prior to loading.

1.07 ENVIRONMENTAL REQUIREMENTS

A. Do not place asphalt when base surface temperature is less than 40 degrees F (4 degrees C), or if surface is wet or frozen.

B. Do not place asphalt when precipitation is occurring.

PART 2 - PRODUCTS

2.01 MATERIALS

A. Asphalt Cement: AC-20; homogeneous, and shall not foam when heated to 347 degrees F (175 degrees C).

B. Fine Aggregate: Material passing the 1/8 inch (3.2 mm) sieve; natural sand of hard, strong, durable particles which are free from coatings or injurious amounts of clay, loam or other deleterious substances.

C. Coarse Aggregate: Material retained on the 1/8 inch (3.2 mm) sieve; crushed stone or gravel; clean, durable, sharp angled fragments of rock of uniform quality.

D. Mineral Filler: ASTM D242, finely ground particles of limestone, hydrated lime or other mineral dust, free of foreign matter; 100 percent shall pass the No. 30 (0.60 mm) sieve; a minimum of 85 percent shall pass the No. 80 (0.18 mm) sieve; and a minimum of 65 percent shall pass the No. 200 (0.075 mm) sieve as measured in accordance with ASTM D546.

2.02 EQUIPMENT

A. Pavers: Equipped with a vibratory device.

B. Rollers: Minimum weight of 10 tons (89 kN) equipped with lubricating devices for the roller wheels.

2.03 ACCESSORIES

A. Tack Coat: Homogeneous, medium curing, liquid asphalt.

B. Wheel Lubricant: Oil-water mixture containing maximum 10 percent lubricating oil.

2.04 MIXES

A. Use dry material to avoid foaming. Mix uniformly.

B. Base Course: NYSDOT Type 1; 4.0 to 6.0 percent of asphalt cement by weight in mixture in accordance with the following gradation:

Sieve Size	Percent Passing
2 inches	100
1-1/2 inches (38 mm)	90-100
1 inch (25 mm)	78-95
1/2 inch (13 mm)	57-84
1/4 inch (6.4 mm)	40-72
1/8 inch (3.2 mm)	26-57
No. 20 (0.85 mm)	12-36
No. 40 (0.425 mm)	8-25
No. 80 (0.18 mm)	4-16
No. 200 (0.075 mm)	2-8

C. Binder Course: NYSDOT Type 3; 4.5 to 6.5 percent of asphalt cement by weight in mixture in accordance with the following gradation:

Sieve Size	Percent Passing
1-1/2 inches (38 mm)	100
1 inch (25 mm)	95-100
1/2 inch (13 mm)	70-90
1/4 inch (6.4 mm)	48-74
1/8 inch (3.2 mm)	32-62
No. 20 (0.85 mm)	15-39
No. 40 (0.425 mm)	8-27
No. 80 (0.18 mm)	4-16
No. 200 (0.075 mm)	2-8

D. Wearing Course: NYSDOT Type 6F; 5.8 to 7.0 percent of asphalt cement by weight in mixture in accordance with the following gradation:

Sieve Size	Percent Passing
1 inch (25 mm)	100
1/2 inch (13 mm)	95-100
1/4 inch (6.4 mm)	65-85
1/8 inch (3.2 mm)	36-65
No. 20 (0.85 mm)	15-39
No. 40 (0.425 mm)	8-27
No. 80 (0.18 mm)	4-16
No. 200 (0.075 mm)	2-6

2.05 SOURCE QUALITY CONTROL

A. Obtain asphalt materials from same source throughout the project.

B. Provide asphalt in accordance with the approved mix design for each type of asphalt.

C. Test samples in accordance with AI MS-2.

PART 3 - EXECUTION

3.01 EXAMINATION

A. Verify existing substrate and conditions.

B. Verify that compacted subbase is dry and ready to receive work of this section.

C. Verify gradients and elevations of base are correct.

D. Verify that all castings are properly installed and are at the correct elevations.

E. Beginning of installation means installer accepts existing conditions.

3.02 PREPARATION

A. Apply tack coat at uniform rate of 0.03 to 0.07 gal/sq. yd (0.14 to 0.32 L/sq. m) to contact surfaces of curbs, gutters and any asphalt or concrete material.

B. Do not apply tack coat to wet or frozen surfaces.

C. Coat surfaces of manhole and catch basin frames with oil to prevent bond with asphalt pavement. Do not tack coat these surfaces.

3.03 INSTALLATION

A. Install work in accordance with AI MS-8.

B. Maintain asphalt temperature between 250 and 325 degrees F (121 and 163 degrees C) during placement.

C. Utilize the vibratory device on the paver at all times.

D. Place asphalt within 24 hours of applying tack coat.

E. Place asphalt to compacted thicknesses as identified on plans. If a multiple course pavement is to be used, place top course within 24 hours of placing bottom course. If more than 24 hours elapse, a tack coat will be required to be placed over the entire surface of the bottom course prior to any additional paving.

F. Compact pavement by rolling. Do not displace or extrude pavement from position. Hand compact in areas inaccessible to rolling equipment.

G. Compact pavement to a minimum of 94 percent maximum density.

H. Develop rolling with consecutive passes to achieve even and smooth finish, without roller marks.

3.04 TOLERANCES

A. Maximum Variation From Flatness: 1/8 inch (3 mm) measured with 10 foot (3 m) straight edge.

B. Maximum Variation From Scheduled Compacted Thickness: 1/8 inch (3 mm).

C. Maximum Variation from True Elevation: 1/4 inch (6 mm).

3.05 FIELD QUALITY CONTROL

A. Field inspection and testing will be performed under provisions of Section 014500.

B. Take samples and perform tests in accordance with AI MS-2.

C. Testing to include percent compaction, gradation and asphalt content.

D. Costs of testing are to be borne by the contractor.

3.06 PROTECTION

A. Protect finished work under provisions of Section 015200.

B. Immediately after placement, protect pavement from mechanical injury until project is accepted by the Owner.

END OF SECTION

SECTION 329119 - TOPSOIL PLACEMENT AND GRADING

PART 1 - GENERAL

1.01 SECTION INCLUDES

A. Finish grade subsoil.

B. Place, level and compact topsoil.

1.02 RELATED SECTIONS

A. A. Section 329219 - Hydroseeding.

1.03 DELIVERY, STORAGE AND HANDLING

A. Deliver topsoil to the site in uncontaminated containers.

B. Do not stockpile topsoil over a height of 8 feet.

C. Cover stockpiled topsoil to protect from precipitation, erosion and contamination.

1.04 ENVIRONMENTAL REQUIREMENTS

A. Do not place wet or frozen topsoil.

B. Do not place topsoil on wet or frozen ground or when precipitation is occurring.

PART 2 - PRODUCTS

2.01 MATERIALS

A. Topsoil: Fertile, agricultural soil, typical for locality, capable of sustaining vigorous plant growth, taken from drained site; friable loam; free of subsoil, clay or impurities, plants, weeds, roots, grass, stone and foreign matter; acidity range (pH) of 5.8 to 6.5; containing a minimum of 2.75 percent and a maximum of 25 percent organic matter. Topsoil may be reused from on-site if it meets these requirements.

PART 3 - EXECUTION

3.01 EXAMINATION

A. Verify existing substrate and conditions.

B. Verify site conditions and note irregularities affecting work of this section.

C. Beginning work of this section means acceptance of existing conditions.

3.02 PREPARATION

A. Eliminate uneven areas and low spots. Remove and dispose of debris, roots, branches and stones in excess of 1/2 inch in size. Remove and dispose of subsoil contaminated with petroleum products.

B. Scarify subsoil to depth of 3 inches where topsoil is scheduled to be placed. Scarify in areas where equipment used for hauling and spreading topsoil has compacted subsoil.

3.03 INSTALLATION

A. Place topsoil in areas where seeding, sodding or planting is scheduled or where shown on the plans.

B. Place topsoil to the depths indicated.

C. Use topsoil in relatively dry state. Place during dry weather.

D. Fine grade topsoil eliminating rough or low areas. Maintain levels, profiles and contours of subgrade.

E. Remove and dispose stone, roots, grass, weeds, debris and foreign material while spreading.

F. Manually spread topsoil around trees, plants and building to prevent damage.

G. Lightly roll placed topsoil.

H. Remove surplus subsoil and topsoil from site. Do not remove surplus topsoil from the site prior to obtaining approval of the Engineer.

I. Leave stockpile area and site clean and raked, ready to receive landscaping.

3.04 PROTECTION

A. Protect landscaping and other features remaining as final work.

B. Protect existing structures, fences, roads, sidewalks, paving and curbs. Any damage caused by the Contractor to any of these items shall be repaired promptly by the Contractor at no additional cost to the Owner.

END OF SECTION

SECTION 329219.16 - HYDROSEEDING

PART 1 - GENERAL

1.01 SECTION INCLUDES

A. Seeding.

B. Mulch, fertilizer, hydromulch and other accessories.

C. Maintenance.

1.02 RELATED SECTIONS

A. Section 329119.13 - Topsoil Placement and Grading.

B. Section 329333 - Planting.

1.03 REFERENCES

A. FS O-F-241 - Fertilizers, Mixed, Commercial.

1.04 DEFINITIONS

A. Weeds: Include Dandelion, Jimsonweed, Quackgrass, Horsetail, Morning Glory, Rush Grass, Mustard, Lambsquarter, Chickweed, Cress, Crabgrass, Canadian Thistle, Nutgrass, Poison Oak, Blackberry, Tansy Ragwort, Bermuda Grass, Johnson Grass, Poison Ivy, Nut Sedge, Nimble Will, Bindweed, Bent Grass, Wild Garlic, Perennial Sorrel and Brome Grass.

1.05 SUBMITTALS

A. Submit under provisions of Section 013000.

B. Product Data: Provide data on seed mixtures, fertilizer and lime.

C. Certificates: Provide certificates indicating that all fertilizer, pesticides and herbicides comply with all applicable regulatory agency requirements.

1.06 OPERATION AND MAINTENANCE DATA

A. Submit under provisions of Section 017000.

B. Maintenance Data: Include maintenance instructions, cutting method and maximum grass height; types, application frequency, and recommended coverage of fertilizer.

1.07 QUALITY ASSURANCE

A. Seed: Provide seed mixture in containers showing percentage of seed mix, year of production, net weight, date of packaging, and location of packaging.

1.08 REGULATORY REQUIREMENTS

A. Comply with applicable regulatory agencies for fertilizer, pesticide and herbicide composition.

B. All fertilizer, pesticides and herbicides to be used shall comply with all applicable regulatory agency requirements.

1.09 DELIVERY, STORAGE, AND HANDLING

A. Deliver, store, protect and handle products to site under provisions of Section 016000.

B. Deliver grass seed mixture in original sealed containers. Seed in damaged packaging is not acceptable.

C. Deliver fertilizer in waterproof bags showing weight, chemical analysis and name of manufacturer.

D. Deliver Hydromulch in UV and weather resistant bags, showing weight, chemical analysis and name of manufacturer.

1.10 ENVIRONMENTAL REQUIREMENTS

A. Do not sow immediately following rain, during windy periods or if ground is frozen.

B. Do not sow when the ambient temperature is expected to drop below 40 degrees F or rise above 90 degrees F during the time in which the seed will establish itself.

C. Planting Season: April 1st through May 15th or September 1st through October 15th.

1.11 COORDINATION

A. Coordinate work under provisions of Section 013100.

B. Coordinate with grading and placement of topsoil.

C. Coordinate with installation of underground sprinkler system piping and watering heads.

1.12 WARRANTY

A. Provide a one-year warranty under provisions of Section 017000.

B. Include coverage for one continuous growing season; reseed areas of dead or unhealthy grass at no additional cost to the Owner.

1.13 MAINTENANCE SERVICE

A. Maintain seeded areas immediately after placement until grass is well established and exhibits a vigorous growing condition, as determined by at least two cuttings, or until the job is accepted by the Owner, whichever occurs last.

PART 2 - PRODUCTS

2.01 MATERIALS

A. Seed: Dry, fresh, re-cleaned seed of the latest crops and of the following proportions:

Mix A:

Grass Type	& of Mixture	Minimum % Germination

Kentucky 31 Fescue	50	90
N.K. 100 Perennial Rye Grass	25	85
Penn Lawn Fescue	25	90

Mix B:

Grass Type	% of Mixture	Minimum % Germination
Merion Bluegrass	50	80
Penn Lawn Fescue	30	90
N.K. 106 Hybrid Rye Grass	20	85

2.02 ACCESSORIES

A. Mulching Material: Hemlock species wood cellulose fiber, dust form, free of growth or germination inhibiting ingredients.

B. Fertilizer: FS O-F-241, Type I, Grade A; recommended for grass, with fifty percent of the elements derived from organic sources; of proportion necessary to eliminate any deficiencies of topsoil, to the following proportions: Nitrogen 10 percent, phosphoric acid 6 percent, soluble potash 4 percent.

C. Limestone: Ground dolomitic limestone containing a minimum of 90 percent calcium and magnesium carbonates. One hundred percent (100%) shall pass a No. 10 mesh screen and a minimum of 70 percent shall pass a No. 100 mesh screen.

D. Hydromulch: 84 percent Mechanically processed straw, 15 percent Mechanically processed reclaimed cotton plant material and 1 percent of tackifier, activators and additives; minimum of 90 percent organic material; moisture content of 12 percent, total carbon to nitrogen ratio, 40:1. Color to be natural green.

E. Peat Moss: Shredded, loose, sphagnum moss; free of lumps, roots, inorganic material or acidic materials; minimum of 90 percent organic material measured by oven dry weight; pH range of 4 to 5 percent; moisture content of 30 percent; with moisture absorbtive capacity of 450 to 500 percent.

F. Water: Clean, fresh and free of substances or matter which could inhibit vigorous growth of grass.

G. Stakes: Softwood lumber, chisel pointed.

H. String: Inorganic fiber.

PART 3 - EXECUTION

3.01 EXAMINATION

A. Verify existing substrate and site conditions.

B. Verify that prepared soil base is ready to receive the work of this section.

C. Beginning of installation means installer accepts existing conditions.

3.02 PREPARATION

A. Area to be seeded shall be cultivated with a scarifier to a depth of 4 inches. All stones, sticks and debris one inch and larger shall be removed. Area shall be smoothly graded to proper elevations.

3.03 APPLICATION

A. Fill tank of mechanically agitated hydroseeding machine with sufficient water to suspend seed and fertilizers.

B. Add water slowly while adding hydromulch. See manufacturer's recommendations to determine the proper application rate.

C. Agitate for a minimum of ten minutes after adding the last amount of water and hydromulch.

D. Apply hydromulch with a hydraulic seeder at a rate of 46 lbs per 1000 sq ft. Apply in a uniform layer from 2 opposing directions to ensure complete soil coverage.

E. Do not hydroseed areas in excess of that which can be mulched on same day.

F. Apply water with a fine spray immediately after each area has been mulched. Saturate to 4 inches of soil. Discontinue watering if washing begins to occur.

G. Clean all surfaces which have received hydroseeding overspray.

H. Identify seeded areas with stakes and string around area periphery. Set string height to 24 inches. Space stakes at 8 feet on center.

3.04 MAINTENANCE

A. Maintain grass until job is accepted by the Owner or until the grass exhibits a vigorous growing condition, as determined by at least 2 cuttings, whichever occurs last.

B. Mow grass at regular intervals to maintain at a maximum height of 2-1/2 inches. Do not cut more than 1/3 of grass blade at any one mowing.

C. Neatly trim edges and hand clip where necessary.

D. Immediately remove clippings after mowing and trimming.

E. Water to prevent grass and soil from drying out.

F. Immediately reseed areas which show bare spots.

3.05 PROTECTION

A. Protect finished work under provisions of Section 015000.

B. Protect seeded areas with warning signs during maintenance period.

END OF SECTION

SECTION 330564 - PRECAST CONCRETE UTILITY VAULT

PART 1 - GENERAL

1.01 SECTION INCLUDES

A. Precast Concrete Vaults.

B. Access Door.

C. Safety Accessories.

D. Fabrication.

1.02 RELATED SECTIONS

A. Section 315000 - Excavation Support & Protection

B. Section 312323 - Backfilling

C. Section 312333 - Trenching

1.03 REFERENCES

A. ASTM A185 - Steel Welded Wire, Fabric, Plain, for Concrete Reinforcement.

B. ASTM A615 - Deformed and Plain Billet - Steel Bars for Concrete Reinforcement.

1.04 SUBMITTALS

A. Shop Drawings: Indicate dimensions and details for vault, including top slab, and acknowledging locations of pipe penetrations.
   1. Submit fully dimensioned fabrication and erection drawings. Drawings shall show all markings, details of shape, connections, plates, inserts, clearances, openings and other requirements of the Contract drawings. Requirements and details for handling and erection shall also be shown.
   2. Submit reinforcement drawings, certified by a Professional Engineer licensed in the State of New York.
   3. Fabrication shall not be started until shop drawings have been approved. Where drawings are “Make Corrections Noted” fabrication may be progressed in conformity with the notes thereon, but revised copies shall be submitted for formal approval and record.

1.05 QUALITY ASSURANCE

A. Qualifications of Precast Structural Concrete Manufacturer: All Work included herein shall be manufactured by and installed under the supervision of a competent and reputable manufacturer who shall produce a Precast Structural Concrete Product similar and equal to the Standard product, with modifications as shown or herein specified.

B. Design:
   1. Design procedure, requirements and allowable stresses shall conform to “A.C.I. Standard Building Code Requirements for Reinforced Concrete (A.C.I. 318)” as currently revised.
      a. Deviations from details shown on the drawing or herein specified, when such items are of a minor nature, may be waived by the Owner in order to accept the approved manufacturer's standard product, such deviations are anticipated in connections and

items of similar nature. Any additional cost due to such deviations accepted by the Owner shall be borne solely by the Contractor.

2. Exceptions to the aforementioned design criteria are the following items: Concrete plank, hollow-core slab, channel slabs, assembled block units and precast joists. Design of these units shall conform to the “Design Recommendations for Precast Concrete Structures (ACI 550R-96)” as currently revised.

C. Concrete Test:

1. Except for precast items designed and controlled by ACI 550R-96, standard concrete tests shall be made with the fabricator's equipment under the supervision of the inspecting laboratory or Engineer. A minimum of one test for slump, one air content determination test, and two compression test cylinders shall be taken from the first pour of concrete on each day that concrete is placed. Also one slump test and one air content determination shall be taken from the first pour of concrete after the lunch period. Additional compression test cylinders shall be taken, and additional tests made for slump and air content at the discretion of the Owner's Representative. Each cylinder shall be so marked that it can be identified with the precast item made from the same concrete batch.

1.06 DELIVERY, STORAGE AND HANDLING

A. Store products on firm, level ground.

B. Handle products in a manner, which will not induce unnecessary stresses, cause cracks to occur or damage the product in any way.

C. Any cracked or otherwise defective materials will be rejected.

D. Precast items shall be handled, lifted and/or supported at points shown on the approved shop drawings or at supporting points at which the Work will set when in service. Such supporting points shall insure against any detrimental deflection, overstressing and cracking or chipping of concrete.

1.07 ENVIRONMENTAL REQUIREMENTS

A. Do not mix or place mortar if ambient temperature is below 40 degrees F.

B. Do not excavate or backfill during inclement weather or when precipitation is occurring.

C. Do not backfill over or with wet or frozen materials.

1.08 COORDINATION

A. Coordinate with excavation, backfilling and installation of piping.

PART 2 - PRODUCTS

2.01 MANUFACTURERS

A. COASTAL PIPELINE PRODUCTS CORP.

B. SUFFOLK PRECAST, INC.

C. Substitutions shall be permitted only after receiving approval from the Engineer.

2.02 COMPONENTS

A. Vault: Reinforced precast concrete of the following materials:
   1. Concrete: ASTM C150 normal Portland cement Type I; minimum 4,000 psi (27.6 MPa) strength at 28 days. Water and air entraining admixture is to be ASTM C 260 compliant.
   2. Reinforcement: ASTM A615 reinforcing bars and ASTM A185 welded wire fabric.
   3. Castings: Campbell Foundry Company or approved equal

B. Access Door:
   1. Manufacturer: BILCO COMPANY of New Haven, CT, Model JD-AL Double Leaf Access Door or approved equal.
   2. Door leaves shall be ¼ inch aluminum diamond pattern plate, reinforced to support a minimum live load of 300 psf with a maximum deflection of 1/150th of the span. Manufacturer to provide structural calculations stamped by a registered professional engineer, upon request.
   3. Channel frame shall be ¼ inch extruded aluminum with bend down anchor tabs around the perimeter. A continuous EPDM gasket shall be mechanically attached to the aluminum frame to create a barrier around the entire perimeter of the cover and significantly reduce the amount of dirt and debris that may enter the channel frame.
   4. A frame drain shall be provided with a 1-1/2” drain coupling.
   5. Hardware: Corrosion-resistant throughout.
      a. Hinges: Heavy forged aluminum hinges designed for horizontal installation, each having a minimum 1/4” (6.3 mm) diameter Type 316 stainless steel pin, shall be provided and shall pivot so the cover does not protrude into the channel frame.
      b. Cover shall be equipped with a hold open arm which automatically locks the cover in the open position.
      c. Cover shall be fitted with the required number and size of compression spring operators enclosed in telescopic tubes to provide, smooth, easy, and controlled cover operation throughout the entire arc of opening and to act as a check in retarding downward motion of the cover when closing. The upper tube shall be the outer tube to prevent accumulation of moisture, grit, and debris inside the lower tube assembly. The lower tube shall interlock with a flanged support shoe fastened to a formed 1/4” gusset support plate. Springs shall have an electro coated acrylic finish. Spring tubes shall be constructed of a reinforced nylon 6/6 based engineered composite material.
      d. Type 316 stainless steel snap lock with fixed handle shall be mounted on the underside of the cover.
      e. A removable exterior turn/lift handle with a spring loaded ball detent shall be provided to open the cover and the latch release shall be protected by a flush, gasketed, removable screw plug.
      f. Safety chain supplied by the door manufacturer and shall be heavy-duty stainless steel with safety hook.

C. Safety Accessories:
   1. Fall Protection Grating, by BILCO COMPANY or approved equal.
      a. As per OSHA 29 CFR 1910.23
      b. Fiberglass grating panels rated for 300 pounds per square foot live load
      c. Lift assistance and hold open arm
      d. Operation is independent of access door reinforcing
   2. Ladder Up Safety Post, by BILCO COMPANY, Model LU-3 or approved equal.
      a. Installed on fixed ladder below access door.
      b. Type 304 stainless steel mill finish telescoping tubular post locks automatically when fully extended.
      c. Movement shall be controlled by a stainless steel spring balancing mechanism.
      d. All hardware shall be 316 stainless steel.

2.03 FABRICATION

A. All precast concrete items shall be shop fabricated in accordance with these Specifications and with the contract drawings. Work shall not proceed until approval of the proposed fabricator has been given by the Engineer.

B. Forms for precast items shall be of rigid construction, true in required shape and provide close control of dimensions and details shown on approved shop drawings. They shall be thoroughly cleaned and prepared before each casting. Forms shall be constructed with tight joints and smooth surfaces and in a manner that will permit removal without defacing the cast concrete.

C. All reinforcing shall be free from loose and flaky rust, oil, grease and other coatings. Reinforcing shall be accurately positioned and securely held in place by devices that will not be exposed on or mar exposed surfaces.

D. All plates, inserts, etc., shall be galvanized. They shall be provided, located and anchored as required by the Contract and approved shop drawings.

E. Concrete shall be compacted and vibrated as required to insure contact with all of the reinforcement and to flow the concrete in place completely filling all corners and angles of the forms.

F. After removal from the forms precast items shall be moist cured and protected from premature drying.

G. Pipe Entry: Provide openings as required.

PART 3 - EXECUTION

3.01 EXAMINATION

A. Verify existing site conditions.

B. Verify existing grades are as indicated on the plans.

C. Verify items provided by other sections of work are properly sized and located.

D. Verify that rough openings for piping are as required.

3.02 INSTALLATION

A. Form bottom of excavation clean and smooth to correct elevation. Compact bottom of the excavation to a minimum of 95 percent of maximum dry density.

B. Install crushed stone as leveling course.

C. Place bottom footing on firm, level surface.

D. Place vault in center of compacted area. Utilize a placement method which will not damage or crack the structure.

E. Place sections plumb and level, trim to the correct elevations.

F. Cut and fit for pipe. Seal openings in wall around pipe with brick and mortar. Establish elevations and pipe inverts for inlets and outlets as indicated on the plans. Trowel surfaces smooth.

G. Mount casting in a 1 inch (25 mm) mortar bed over access opening in slab or dome top. Install firm, level and to the required elevation.

3.03 FIELD QUALITY CONTROL

A. Request inspection prior to backfilling around structure and prior to surface restoration.

3.04 PROTECTION

A. Protect structure from damage and displacement until project is accepted by the Owner.

END OF SECTION

SECTION 331300 - DISINFECTION OF WATER UTILITY DISTRIBUTION

PART 1 - GENERAL

1.01 SECTION INCLUDES

A. Disinfection of water piping and valves.

1.02 REFERENCES

A. ANSI/AWWA B300 - Standard for Hypochlorites.

B. ANSI/AWWA B301 - Standard for Liquid Chlorine.

C. ANSI/AWWA C651 - Disinfecting Water Mains.

1.03 SUBMITTALS

A. Submit proposed method for introducing disinfectant into water piping.

B. Test Reports: Indicate results comparative to specified requirements.

1.04 PROJECT RECORD DOCUMENTS

A. Disinfection Report: Record:
1. Type and form of disinfectant used.
2. Date and time of disinfectant injection start and time of completion.
3. Test and injection locations.
4. Initial and 24-hour disinfectant residuals (quantity in treated water) in ppm for each outlet tested.
5. Date and time of flushing start and completion.
6. Disinfectant residual after flushing in ppm for each outlet tested.

B. Bacteriological, Chemical and Organic Chemical Report: Record:
1. Date issued, project name and testing laboratory name, address and telephone number.
2. Time and date of water sample collection.
3. Name of person collecting samples.
4. Test locations.
5. 24-hour and 48-hour disinfectant residuals in ppm.
6. Coliform bacteria and chemical test results.
7. Certification that water conforms or fails to conform to New York State drinking water standards.
8. Laboratory Director's signature and authority.

1.05 QUALITY ASSURANCE

A. Perform work in accordance with ANSI/AWWA C651.

1.06 QUALIFICATIONS

A. Water Treatment Firm: Company specializing in disinfecting potable water systems specified in this Section with minimum three (3) years experience.

B. Testing Firm: Laboratory specializing in testing potable water systems, approved by the New York State Department of Health.

1.07 REGULATORY REQUIREMENTS

A. Conform to Recommended Standards for Water Works and applicable codes or regulations for performing the work of this Section.

B. Water quality to conform to New York State drinking water standards after completion of disinfection.

PART 2 - MATERIALS

2.01 DISINFECTION CHEMICALS

A. ANSI/AWWA B300, Hypochlorite.

B. ANSI/AWWA B301, Liquid Chlorine.

PART 3 - DISINFECTION & TESTING

3.01 EXAMINATION

A. Verify that all piping systems have been cleaned, inspected and pressure tested.

3.02 EXECUTION

A. Provide required equipment to perform the work of this Section. The Owner will provide the water required for the initial disinfection and filling of the piping, and valves, etc. The Contractor shall pay for the water required for any subsequent filling of these systems based on the Owner's retail water rate.

B. The preferred method of chlorinating the new water mains is the continuous feed method using calcium hypochlorite granules in accordance with Section 4.4.3 of AWWA C651-05. Granules shall be placed at a minimum in accordance with Table 1 of the applicable Section. The slug method of chlorination is also acceptable and shall be performed in accordance with Section 4.4.4 of AWWA C651-05. The use of tablets for disinfection is prohibited.

C. The use of calcium hypochlorite granules specifically intended for swimming pool use is prohibited. The contractor shall utilize only those chemicals which are NSF 60/AWWA approved for disinfection.

D. The newly laid main shall be properly chlorinated to at least 200 ppm (mg/l) for a minimum of 24 hours, to ensure the chlorine residual at the pipe extremities and at other representative points after the retention period, is at least 200 ppm (mg/l). Treated water shall be retained in the pipe long enough to destroy all non-spore-forming bacteria.

E. After completion of retention period, new mains shall be flushed in order to eliminate residual chlorine with a suitable quantity of sodium bisulfite, sodium sulfide or sodium thiosulfate prior to disposal. Bacteria samples may not be collected until a chlorine residual representative of the existing distribution system is achieved. New mains shall be flushed at a velocity of no less than 2.5 ft/sec.

F. Collect samples 24 & 48-hours after flushing disinfectant and refilling with potable water. Samples shall not be collected if a chlorine residual inconsistent with that of the existing distribution system is present. Any portion of the sample set which tests positive for total coliform and/or e-coli bacteria constitutes failure of the entire set with no exceptions.

G. Field chlorine residual checks shall be performed for each sample and shall be recorded on the laboratory sampling form for inclusion in the sampling results report.

H. Two (2) consecutive sets of bacteriological samples, taken 24 hours apart, must be collected from every 1,200 ft of new main, the end of the line and from each branch. Samples should be collected after final flushing and when the chlorine concentration in the water leaving the main is no higher than that generally prevailing in the distribution system (ANSI/AWWA C651 Standard).

I. Sample tap locations shall be as directed by the Engineer. Taps shall be installed to sample at a frequency as described above.

J. If water quality in system does not meet the requirements of the Department of Health for potable water, the Contractor shall re-chlorinate or take other steps necessary to provide acceptable water quality. Samples shall be collected and analyzed after each attempt.

3.03 QUALITY CONTROL

A. Test samples in accordance with ANSI/AWWA C651 and Department of Health requirements.

END OF SECTION

SECTION 331411 - WATER UTILITY DISTRIBUTION PIPING

PART 1 - GENERAL

1.01 SECTION INCLUDES

A. Cement-Lined Ductile Iron Pipe

B. Special Castings; Mechanical Joint Fittings

C. Buried Gate Valves & Valve Boxes

1.02 RELATED SECTIONS

A. Section 312333 - Trenching

B. Section 312323 - Backfilling

C. Section 331300 - Disinfection of Water Utility Distribution

1.03 REFERENCES

A. ANSI/AWWA C104 - Cement-Mortar Lining for Ductile Iron Pipe and Fittings for Water.

B. ANSI/AWWA C110 - Ductile Iron and Grey Iron Fittings.

C. ANSI/AWWA C111- Rubber Gasket Joints for Ductile Iron Pressure Pipe and Fittings.

D. ANSI/AWWA C150 - Thickness Design of Ductile Iron Pipes

E. ANSI/AWWA C151 - Ductile-Iron Pipe, Centrifugally Cast for Water Service.

F. ANSI/AWWA C153 - Ductile-Iron Compact Fittings for Water Service.

G. ANSI/AWWA C509 - Resilient Seated Gate Valves for Water Supply Service.

H. ANSI/AWWA C600 - Installation of Ductile Iron Water Mains and Their Appurtenances.

1.04 SUBMITTALS

A. Submit under provisions of Section 013300.

B. Product Data: Provide data on pipe materials, pipe fitting, valves and accessories.

C. Manufacturer's Certificate: Certify that products meet or exceed specified requirements.

1.05 PROJECT RECORD DOCUMENTS

A. Accurately record actual locations of piping mains, valves, connections, and invert elevations.

B. Identify and describe unexpected variations to subsoil conditions or discovery of uncharted utilities.

1.06 QUALITY ASSURANCE

A. Perform work in accordance with the local water utility company requirements.

B. The tone-out, mark-out, locating and verification of existing utilities on private property and within public Right-of-Ways are the responsibility of the contractor. All known utilities and facilities shall be verified by test holes or other means prior to commencing water main installation. No compensation will be paid to the contractor for lost time due to improper or inadequate utility investigation.

C. The contractor shall conform to the standard traffic requirements of the New York State Manual of Uniform Traffic Control Devices for work in Public Roadways.

D. Valves: Manufacturer's name and pressure rating marked on valve body.

1.07 DELIVERY, STORAGE AND HANDLING

A. Deliver, store, protect and handle products to ensure they are kept free from damage.

B. Store piping and valves to ensure that their interiors are kept free of debris, organics or animals.

C. Deliver and store valves in shipping containers with labeling in place.

PART 2 - PRODUCTS

2.01 CEMENT LINED DUCTILE IRON PIPE

A. Approved Manufacturers:
   1. US PIPE FABRICATION
   2. McWANE DUCTILE

B. Cement-Lined Ductile Iron Pipe meeting AWWA C150/C151 :

   1. Special Class 52 for all pipe 14 inches and smaller.
   2. Special Class 51 for all pipe 16 inches and larger.

C. Interior lining shall be double-thick cement with a minimum thickness of 1/8" (125 mils) in accordance with AWWA C104.

D. Exterior of pipe shall have an exterior bituminous coating measuring 1 mil in thickness and be marked with the manufacturer name, date of casting and pressure class.

E. Pipe Accessories:

1. Joints: ANSI/AWWA C111, vulcanized rubber gaskets for push-on pipe; mechanical joint with rods and retainer glands for fittings.
2. Field lock gaskets by US Pipe Model 350 shall be utilized on the last push-on joint of all dead-end mains, where a bell falls within 10 feet of a mechanical joint connection or as indicated on the plans or as directed by the Engineer.
3. Gaskets shall be free from porous areas, foreign materials and visible defects. No reclaimed rubber shall be used
4. Lubricant for Joints: Nontoxic, NSF-61 certified, shall not support the growth of bacteria, and shall have no deteriorating effects on the gasket or pipe material.
5. Wedges: Bronze, installed at each push-on joint.

2.02 SPECIAL CASTINGS

A. Manufacturers:

1. SIGMA CORP.
2. US PIPE
3. TYLER UNION
4. APPROVED EQUAL

B. Material:

1. Fittings shall be in accordance with

   a. ANSI/AWWA C110 (full-bodied)
   b. ANSI/AWWA C153 (compact).

2. Fittings shall be ductile iron.
3. Ductile iron fittings shall have a pressure rating of 350 psi.
4. Fittings shall be cement lined.

C. Mechanical Joint fittings shall be used with "push-on" joint pipe with the joint conforming to AWWA Specification C111.

D. Rubber gaskets shall be used at each pipe connection. Rubber gaskets shall be vulcanized rubber that is free of porous areas, foreign materials and visible defects. No reclaimed rubber shall be used. The size, mold number, gasket manufacturer's mark, the letters "MJ" and the year of manufacture shall be molded in the rubber.

E. Wedge type retainer glands shall be required at all mechanical joints.

1. Manufacturer:

   a. EBAA IRON WORKS
   b. FORD METER BOX CO.
   c. US PIPE
   d. SIGMA CORPORATION
   e. STAR PIPE PRODUCTS
   f. TYLER UNION

2. Retainer glands shall be secured to fittings using alloy steel T-head bolts and hex-head nuts.

F. The contractor shall install a minimum of two ¾-inch steel tie rods on mechanical joint fittings. Additional tie-rods may be requested on vertical pipe or by Engineer in areas of high pressure.

G. Steel tie rods shall be secured to fittings using 3/4" steel eye-bolts, washers and nuts. The use of ductile iron "Duc-Lugs" are prohibited. Steel tie rods shall be secured to pipe using half-moon pipe clamps, restraints, washers and nuts.

H. Bell ends of pipe shall not be installed within 4 feet of a mechanical joint assembly without being further restrained by locking gaskets and tie rods.

I. Concrete blocking shall be applied on all pipe lines 4-inch in diameter and larger at all hydrants, tees, plugs, caps, and at bends deflecting 22-1/2 degrees or more. Blocking shall be placed between solid ground and the fitting to be anchored. The blocking shall be so placed that the pipe and fitting joints will be accessible for repair. Size of blocking and minimum bearing area shall be in accordance with the Bearing Area Table, Section 3.3 of this specification.

2.03 BURIED GATE VALVES

A. Acceptable Manufacturers:

1. CLOW VALVE COMPANY
2. KENNEDY VALVE Co.
3. MUELLER COMPANY.

B. All vertical gate valves up to and including 12-inch diameter shall conform to AWWA Specification C509 or latest revision and specify as follows:

1. Material: Iron body, bronze mounted.
2. Pressure: 250 psi minimum working pressure.
3. Wedge: Cast iron wedge with urethane rubber coating (encapsulated). The rubber/metal bond shall be tested to meet ASTM D429.
4. Stem: Forged bronze, non-rising stem with two "O" ring seals.
5. Wrench Nut: Two-inch square (at base) wrench nut opening to the left or counterclockwise.
6. Mechanical Joint Ends: Mechanical joint ends complete with all joint accessories including rubber gaskets.
7. Painting: The body and bonnet shall be coated with a fusion coating both interior and exterior to meet AWWA Standard C550.
8. Markings: Markings shall be cast on the bonnet or body of each valve, and shall show the manufacturer's name or mark, the year the valve casting was made, the size of the valve, and the designation of working water pressure for 4 to 12-inch valves.
9. Affidavit of Compliance: The Contractor shall have the manufacturer provide an affidavit directly to the Engineer that all valves supplied on this project comply with all applicable provisions of AWWA Specification C509, and that each valve was subjected to and passed the 500 psi hydrostatic test without leakage. No final payment for valves will be made until this Affidavit of Compliance is received by the Engineer.

C. Valve Boxes

1. Manufacturer:

a. BINGHAM & TAYLOR
b. SIGMA CORPORATION
c. TYLER UNION

2. Valve boxes shall be two piece ductile iron, sliding type with 8" x 4-7/8" flanged bottom section, 12" x 5-5/8" top section and 7" drop lid with "WATER" cast on cover.

PART 3 - EXECUTION

3.01 PREPARATION

A. Remove scale and dirt, on inside and outside, before assembly.

B. Bevel plain ends of cut pipe at push-on joints.

3.02 BEDDING

A. Excavate pipe trench in accordance with Section 312333 for work of this section. Hand trim excavation for accurate placement of pipe to elevations indicated.

B. Place bedding material at trench bottom; level fill materials in one continuous layer not exceeding 6 inches compacted depth; compact to 95 percent maximum dry density.

C. Backfill around sides and to top of pipe with fill, tamped in place and compacted to 95 percent maximum dry density.

D. Maintain optimum moisture content of bedding material to attain required compaction density.

3.03 INSTALLATION - PIPE

A. The Contractor shall be responsible for verifying the location of the existing water mains and other utilities along the entire route of the project.

B. The Contractor must have experienced personnel in his employ to perform the cut-ins and connections to the existing water mains and have available equipment necessary for cutting ductile iron, cast iron, asbestos cement and miscellaneous piping in the existing distribution system, and the fittings required for connection.

C. Suitable facilities shall be available for proper dewatering, drainage and disposal of water removed from dewatered lines and excavations, without damage to adjacent properties. Exposed ends of the water main shall never be submerged either partially or fully.

D. Maintain a 10 foot horizontal separation and an 18 inch vertical separation of water main from all storm and sanitary sewer facilities. The Contractor shall install the water main with the minimum cover indicated in the Contract Documents. The Contractor shall verify the depth of any existing service laterals to the structures prior to crossing of same.

E. Pipe trenches shall be of minimum width and allow six (6) inches on each side of the bell with sufficient width to allow straight alignment of pipe and provide sufficient room for jointing as required and to allow the backfill to be placed as specified.

F. Only new full-lengths of pipe shall be delivered to and utilized on this project. Field cut pieces with bell ends shall be a minimum of 4 feet in length. Smaller pieces shall not be permitted for use and shall be removed from site.

G. Pipe shall be laid with the bell end facing in the direction of laying. Where pipe is laid on a grade of 10% or greater, the laying shall start at the bottom and shall proceed upward with the bell ends of the pipe up gradient.

H. Install pipe to indicated elevation to within tolerance of 1/2 inch.

I. Clean bell end of pipe prior to placing gasket. Apply lubricant to both gasket and plain end of pipe.

J. Do not field cut pipe within 24 inches of bell or 8 inches of spigot end. Verify the pipe diameter of cut end.

K. Route pipe in straight line where possible. Joint deflections are permitted as outlined in ANSI/AWWA C600.

L. Install and test ductile iron piping and fittings to ANSI/AWWA C600.

M. At each joint, two serrated silicon bronze wedges shall be driven into the rubber gasket after the pipe is pushed into place. The wedges shall be installed on opposite sides of the joint on a horizontal plane. Both wedges shall be started in together and driven with a hammer with blows on alternate sides so as not to displace the spigot end to one side of the pipe.

N. Establish elevations of buried piping to ensure not less than 4 feet of cover unless otherwise indicated on plans or specifically approved by Engineer or Owner in field.

O. Form and place concrete for thrust blocks at each elbow or change of direction of pipe.

BEARING AREA TABLE

Pipe Size	Dead End or Tee	90 Degree Bend	45 Degree Bend	22 ½ Degree Bend
4 in	1 ft^2	1½ ft^2	3/4 ft^2	½ ft^2
6 in	2 ft^2	3 ft^2	2 ft^2	1 ft^2
8 in	4 ft^2	5½ ft^2	3 ft^2	1½ ft^2
10 in	6 ft^2	8½ ft^2	4½ ft^2	2½ ft^2
12 in	9 ft^2	12 ft^2	6½ ft^2	3½ ft^2
> 16 in	15 ft^2	22 ft^2	12 ft^2	6 ft^2

P. Trench widths shall not exceed the following authorized widths prior to cut-back:

1. Less than 12-inches diameter mains: 30 inches
2. 12-inch & 16-inch diameter mains: 36 inches

Q. Pavement removal shall be kept to a minimum and not exceed the preceding authorized widths. Sawing, drilling or chipping shall be used to ensure the breakage of pavement along straight lines. Final restoration limits shall include a 12-inch cut-back on all sides of the trench.

R. Backfill trench in accordance with Section 312323.

S. The contractor shall restore, replace and/or reposition all decorative lawn ornaments, and miscellaneous items disturbed during water main installation including but not limited to the following: stones, brick driveway pavers, fences, signs, sprinklers, shrubs and trees.

3.04 PRESSURE TESTING

A. Expel all air from piping system, including pipe, valves and appurtenances. All new water mains shall be pressure tested at 150 psi or 1.5 times line pressure, whichever is greater. The pressure test shall be held for a minimum of two hours with no signs of leakage.

B. Remove and replace any defective pipe, fittings, valves, and appurtenances. Repeat pressure test until satisfactory to Engineer.

3.05 INSTALLATION - SPECIAL CASTINGS

A. Tighten glands in accordance with manufacturers direction.

B. Ensure that fittings are free of dirt and debris prior to installation.

C. Support fitting with solid blocking in areas of over excavation. Wood wedges, blocking and supports are prohibited.

3.06 INSTALLATION - VALVES

A. Set valves on solid bearing.

B. Contractor is responsible for ensuring that all valve boxes are plumb and centered over the operating nut until after final asphalt restoration is complete.

C. Contractor shall adjust boxes prior to final restoration. The use of "Rite-Hite" type adapters is not permitted on new construction.

3.07 DISINFECTION OF DOMESTIC WATER PIPING SYSTEM

A. Flush and disinfect system in accordance with Section 331300.

B. Two consecutive negative sets of bacteriological samples are required. Following disinfection, the main shall be flushed prior to bacteriological testing. The mains shall be flushed again following satisfactory completion of the pressure test. The first sample(s) shall be taken a minimum of 24 hours after flushing operations are completed. The second sample(s) shall be taken at least 24 hours after the first, and shall be representative of the water that has been in the pipe for 24 hours.

3.08 NOTIFICATIONS

A. The Engineer and local water utility shall be notified at least 24 hours in advance and immediately prior to any of the following:

1. Commencing work or starting again after more than a 72-hour shutdown.
2. Admitting water to a new section.
3. Flushing or blowing off water mains.
4. Chlorination of water mains.
5. Shutting down water mains or service to consumers. Consumers should also be informed at least 24 hours in advance and immediately prior to shutting down service.
6. Disinfection and reconnection of house services.

7. The permanent shutting down of existing water mains or house services.

3.09 FIELD QUALITY CONTROL

A. Field inspection and testing will be performed in accordance with District requirements.

B. Leakage testing shall be in accordance with ANSI/AWWA C600.

C. Compaction testing will be performed in accordance with ANSI/ASTM D1557.

D. If tests indicate work does not meet specified requirements, remove work, replace and retest at no cost to Owner.

END OF SECTION 331100

SECTION 331417 - WATER SERVICE CONNECTIONS

PART 1 - GENERAL

1.01 SECTION INCLUDES

A. Copper piping and accessories

B. Corporation stops

C. Curb stops

D. Extension services boxes

E. Meter Pits & Covers

F. Yoke Bars & Meter Setters

G. Water Meters

1.02 RELATED SECTIONS

A. Section 312323 - Backfilling

B. Section 312333 - Trenching

C. Section 331300 - Disinfection of Water Utility Distribution

D. Section 331411 - Water Utility Distribution Piping

1.03 REFERENCES

A. ASTM B88 - Seamless Copper Tube.

B. ASME B42 - Seamless Cooper Pipe.

C. ASME B16.22 - Wrought Copper and Bronze Solder-Joint Pressure Fittings.

D. ASTM B42 - Seamless Cooper Pipe.

E. ANSI/AWWA C800 - Underground Service Line Valves and Fittings

F. ANSI/NSF Standard 61, Drinking Water System Components

G. AWWA C800 - Underground Service Line Valves and Fittings.

1.04 SUBMITTALS

A. Submit under provisions of Contract

B. Product Data: Provide data on pipe materials, pipe fitting and accessories.

C. Manufacturer's Certificate: Certify that products meet or exceed specified requirements.

1.05 PROJECT RECORD DOCUMENTS

A. Accurately record actual locations of piping mains, valves, connections, and invert elevations.

B. Identify and describe unexpected variations to subsoil conditions or discovery of uncharted utilities.

1.06 QUALITY ASSURANCE

A. Perform work in accordance with the local water utility company requirements.

B. All brass valves and fittings installed on a potable water supply line shall be made of “low-lead” materials and have a maximum lead content of 0.25 percent by weight. All low lead brass fittings shall be stamped or embossed with a mark indicating that the product is manufactured from low-lead alloys.

PART 2 - PRODUCTS

2.01 COPPER PIPING AND ACCESSORIES

A. All underground copper piping, for potable water shall be soft annealed Type “K” ANSI H-23.1 with fittings per ANSI A-40.2.

B. Straight couplings shall be as manufactured by MUELLER COMPANY No. H-15403 or specifically approved equal and be used only to connect new copper to existing. Couplings shall not be used between the corporation stop and reconnection point unless the length of copper exceeds one hundred feet for ¾ or 1 inch or 60 feet for 1-1/2 or 2 inch.

C. Insulated adaptor shall be installed on the outlet side of the meter yoke on 1 inch water services only. Insulated adaptor shall be as manufactured by MUELLER COMPANY No. H-35428 or specifically approved equal.

2.02 CORPORATION STOP

A. Corporation stops to be MUELLER COMPANY No. H-15008 for 1-inch and No. H-15023 for 1-1/2 and 2 inch. Ball valve type corporation stops may be utilized if pre-approved by Water District. Specifically approved equal shall be as manufactured by the FORD METER BOX COMPANY.

B. Water service bronze body with AWWA standard thread inlet and copper AWWA outlet, complete with straight coupling nuts.

C. A service saddle shall be utilized on all taps greater than 1-inch. Service saddle shall be Type F3202 as manufactured by FORD METER BOX CONMPANY or MUELLER COMPANY, No. DR-2-S-XXXX-CC-150/200.

2.03 CURB STOPS

A. All curb stops shall be by MUELLER COMPANY, No. H-15202. Ball valve curb stops may also be utilized if pre-approved by the Water District. Specifically approved equal shall be as manufactured by the FORD METER BOX COMPANY.

B. All metal parts shall be constructed of water service bronze. The curb stop shall have a combined tee and cap and an inverted tapered key with 1/4-inch hole drilled in cap for attaching a stationary rod. The valve shall open to the left (counterclockwise).

2.04 EXTENSION SERVICE BOXES

A. Extension service boxes with stationary rod (for 1-inch curb stop) to be Buffalo/Gardiner style extension size 94-E or 94-F or specifically approved equal. Heavy duty extension service boxes with heavy duty rods shall be used on all 1-1/2 and 2 inch water services.

B. Extension service boxes shall be constructed of extra grade gray iron cover and base, steel ex-tension pipe; with a small arch pattern base for 1/2-inch through 1-1/2-inch curb stops; adjustment between 4 and 5 feet; complete with stationary inside stop rod; one-piece lid with two holes for removal with spanner wrench.

2.05 METER PITS & COVERS

A. The meter pit shall be 24 inch diameter by 48 inches long with a tapered top to 21 inches for 1 inch water services and for 36 inches and 48 inches long for 1-1/2 and 2 inch water services. All pits shall be constructed of Thermoplastic, notched (3 x 4 inch) 180 degrees with anti setting flanges. In addition, pit wall thickness shall be no greater than 0.7 inches and no less than 0.3 inches.

B. The pit cover shall be constructed of ductile iron and shall have a 1-3/4 inch drilled hole capable of accepting the remote read pad.

C. Meter pit covers and lids for 24 inch diameter pits shall be as manufactured by FORD METER BOX COMPANY, Model No. A4-T for covers and Model No. WA3L-T for the lids (11-1/2 inch opening). Meter pit covers and lids for 30 inch diameter pits shall be as manufactured by FORD METER BOX COPMPANY, Model No. MC-30-T for covers and Model No. RML-11T for the lid.

2.06 YOKE BARS & METER SETTERS

A. 1-Inch Water Service:
   1. The 1 inch yoke bar shall be installed at a height that will allow for 15 to 18 inches of clearance between the top of the meter and the meter pit lid, or 22 to 25 inches of clearance between the top of the yoke and the meter pit lid. The 1 inch yoke bar shall be as manufactured by FORD METER BOX COMPANY, No. Y504. Yoke bar shall contain expansion coupling as manufactured by FORD METER BOX COMPANY, No. EC-4. Expansion couplings shall not be installed at the time of installation and instead delivered to the Water District office.
   2. A 90 degree angle valve as manufactured by FORD METER BOX COMPANY, No. AV92-444W shall be installed on the inlet side of the yoke bar.
   3. A 90 degree angle check valve as manufactured by FORD METER BOX COMPANY, No. HA91-444D shall be installed on the outlet side of the yoke bar.

B. 1-1/2 Inch Irrigation Service:
   1. The 1-1/2 inch copper meter setter shall be as manufactured by MUELLER COMPANY, Catalog No. B-2423-2, or specifically approved equal. Riser height, dimension “B” shall be 24 inches unless otherwise stated. Adjustable dimension “A” shall be 13 inches. A by-pass is not required or permitted.

C. 2-Inch Water Service:
   1. The 2 inch copper meter setter shall be as manufactured by MUELLER COMPANY, Catalog No. B-2423-99000, or specifically approved equal. Riser height, dimension “B” shall be 24 inches unless otherwise stated. Adjustable dimension “A” shall be 15-1/4 inches. A 1 inch elevated bypass with lockable ball valve is required. Meter Setter shall be specially ordered with a 2 inch angle dual check valve with meter flange on the outlet side of the setter.

2.07 WATER METER

A. The 1-inch water meter shall be as manufactured by SENSUS TECHNOLOGIES, INC., SR2 Displacement Type with Touch Read System equipment. The meter shall utilize AWWA standard meter flanges. The meter and AMR hardware shall be provided and installed by the Riverhead Water District.

PART 3 - EXECUTION

3.01 INSTALLATION

A. Before tapping, the pipe to be tapped shall be thoroughly cleaned by removing all dirt and scale. The main shall be tapped on the side facing the house. All copper service pipes shall be installed at 4'-6" minimum cover with slack left at the corporation stop.

B. The Contractor shall furnish and install all materials and incidentals as outlined herein including the copper tubing, complete from the new corporation stop to within 5 feet of the existing building face and as indicated on the plans. The new installation shall include all costs to furnish and install the corporation stop, saddle, 'K'-copper, and union.

C. The curb box shall be centered over the curb stop and shall be plumb witht he cover slightly above grade.

D. In making cuts in copper service pipe, the most modern equip-ment shall be used to produce a square cut. The tubing, after cutting, shall be cut square, burrs removed and reamed. Fittings, sockets and tube ends shall be thoroughly cleaned to a bright finish. All solder joints shall be fluxed using either 95/5 tin/antimony or silver solder. NO LEAD SOLDER WILL BE PERMITTED.

E. On completion of the service connection, the corpo-ration stop shall be left on.

F. All new copper service piping crossing existing drainage piping, etc. shall be installed at a 4'-6” minimum cover wherever possible. In areas where 4'-6” cover cannot be maintained, the Contractor will be allowed to cross the drainage piping with an absolute minimum cover of 3'-6”, otherwise the new service shall be installed under the drainage piping, etc. All new services installed with cover between 3'-6” and 4'-6” due to drain interference, etc., shall be wrapped with felt wrapping and tar paper or other approved frost wrap protection. A minimum of ten-foot horizontal separation shall be maintained between the new water service and any sanitary sewer facilities including; pipes, tanks and pools.

G. The Contractor shall take all necessary precautions to minimize damage to any underground utility. Damage to any utility shall be immediately repaired and the cost of such repair shall be the responsibility of the Contractor. No water service shall be accepted which has been installed through any storm drain, etc.

3.02 FIELD QUALITY CONTROL

A. Flush new service line prior to installing meter, backflow device and connecting to existing service.

B. Before piping is concealed, recheck it for leaks.

END OF SECTION

SECTION 331419 - WATER UTILITY DISTRIBUTION FIRE HYDRANTS

PART 1 - GENERAL

1.01 SECTION INCLUDES

A. Fire Hydrant Assemblies

1.02 RELATED SECTIONS

A. Section 312333 - Trenching

B. Section 312323 - Backfilling

C. Section 331100 - Water Utility Distribution Piping

D. Section 331300 - Disinfection of Water Utility Distribution

1.03 REFERENCES

A. ANSI/AWWA C502 - Dry Barrel Fire Hydrants.

1.04 SUBMITTALS

A. Submit under provisions of Section 013300.

B. Product Data: Provide data on hydrant assemblies.

C. Manufacturer's Certificate: Certify that products meet or exceed specified requirements.

1.05 QUALITY ASSURANCE

A. Perform work in accordance with the local water utility company requirements.

1.06 DELIVERY, STORAGE AND HANDLING

A. Deliver, store, protect and handle products to ensure they are kept free from damage.

PART 2 - PRODUCTS

2.01 FIRE HYDRANT ASSEMBLIES

A. Acceptable Manufacturers:

B. MUELLER, Supercenturion 250 No. A-421.

C. Hydrant: ANSI/AWWA C502, dry barrel type, inside dimension of 6 inches minimum, with 4.5 inch diameter valve seat opening; minimum net water area of barrel not less than 190 percent of valve opening; 6 inches mechanical joint inlet connection with accessories, gland bolts and rubber gaskets.

D. Hose Connection: Two 2-1/2 inch (64 mm) diameter hose nozzles conforming to NATIONAL STANDARD dimensions (7-1/2 threads per inch).

E. Hydrants shall be equipped with non-kinking chains.

F. Steamer Connection: One 4-1/2 inch (114 mm) pumper nozzle conforming to NATIONAL STANDARD dimensions (4 threads per inch)

G. Hydrant Extensions: Fabricate in multiples of 6 inches (150 mm) with rod and coupling to increase barrel length. Extensions shall be of the same manufacturer as the hydrant.

H. Operating nut and outlet nozzle caps shall be square (4 sided) in shape, 1-1/2 inches flat to flat dimension at the base and open to the left or counterclockwise. A clearly visible arrow and the word "OPEN" shall be cast in relief on the top of the hydrant.

I. Where indicated on the plans or by the Engineer, hydrant protector posts shall be 4-inch diameter cast iron, ductile iron or steel, filled with concrete and measure a minimum of 6-1/2 feet long. Post to be exposed a minimum of 36" feet above grade and be painted with two coats of reflective yellow exterior paint.

J. All hydrants designated to be removed shall be delivered to the Owner. The Contractor shall use extreme care so as not to crack the hydrant or hydrant shoe.

K. A poured concrete hydrant bracing pad shall be installed around the base of each hydrant from 3" to 6" below finished grade. Pad shall be a minimum of 4" thick.

L. Finish: Primer and two coats of enamel to barrel and top section. All dirt, grease, rust or other contaminants shall be removed from the hydrant surface prior to painting. Colors shall be coordinated with Owner.

M. The Contractor shall provide to the District two (2) safety flange repair kits, catalog number A-300 by Mueller.

PART 3 - EXECUTION

3.01 INSTALLATION - HYDRANTS

A. Set hydrants plumb and locate steamer connection perpendicular to roadway.

B. Set hydrants to grade, with center of steamer connection at least 18 inches aboveground.

C. Attach hydrant control valve to anchoring tee unless otherwise directed by Owner or Engineer. Attach hydrant to valve with a minimum of two 3/4" steel tie rods in all cases.

D. Provide a drainage pit surrounding the hydrant 36 inches square by 24 inches deep filled with 1 inch diameter washed gravel. The stone shall be placed to a point 1 foot above the bottom flange.

E. Brace behind elbow of hydrant with 4,000 psi minimum concrete having a minimum bearing area of 3 sq ft against unexcavated earth. A precast concrete block shall be installed beneath the elbow.

3.02 FIELD QUALITY CONTROL

A. After activation of water main and hydrant, each hydrant shall be operated with the main valve fully opened and closed to ensure proper drainage and operation.

B. Field inspection and testing will be performed in accordance with District requirements.

END OF SECTION

SECTION 402324 - VALVES AND VALVE ACCESSORIES

PART 1 - GENERAL

1.01 SECTION INCLUDES

A. Hydraulic Control Valves

1.02 REFERENCES

A. ASME/ANSI B16.1 - Cast Iron Pipe Flanges and Flanged Fittings

B. ASME/ANSI B16.34 - 2004 Valves Flanged, Threaded and Welding End

C. ASTM A126 - Grey Iron Castings for Valves, Flanges and Pipe Fittings

D. ASTM A536 - Ductile Iron Castings

E. AWWA C504 - Standard for Rubber Seated Butterfly Valves

F. AWWA C508 - Swing Check Valves for Waterworks Service, 2 inches (50 mm) through 24 inches (600 mm) NPS

G. AWWA C509 - Resilient Seated Gate Valves for Water Supply Service

H. AWWA C540 - Power Actuating Devices for Valves and Slide Gates

I. AWWA C542 - Electric Motor Actuators for Valves and Slide Gates

J. AWWA C550 - Protective Epoxy Interior Coatings for Valves and Hydrants

K. AWWA C800 - Swing - Check Valves for Waterworks Service, 2 inches (50 mm) through 24 inches (600 mm) NPS

L. ANSI/NSF Standard 61, Drinking Water System Components

M. AWWA C530 - Pilot Operated Control Valves

1.03 SUBMITTALS

A. Submit product data under provisions of Section 013300.

B. Manufacturer's Certificate: Certify that products meet or exceed specified requirements.

C. Submit the following:
   1. Technical descriptive data for the valves showing model number, size, capacity, weight, materials, accessories and other similar information. Catalog cuts are acceptable if they contain the necessary information.
   2. Storage, handling and installation instructions for the valves.
   3. Warranty Certificate prepared in accordance with paragraph 1.03 herein.

D. Operations and Maintenance Manuals prepared in accordance with the requirements contained in Section 017823 - Operating and Maintenance Data shall be provided.

1.04 PROJECT RECORD DOCUMENTS

A. Accurately record actual locations of valves, connections, and invert elevations.

1.05 QUALITY ASSURANCE

A. Perform work in accordance with the local water utility company requirements.

B. Valves: Manufacturer's name and pressure rating marked on valve body.

C. All brass valves and fittings installed on a potable water supply line shall be made of "low-lead" materials and have a maximum lead content of 0.25 percent by weight. All low lead brass fittings shall be stamped or embossed with a mark indicating that the product is manufactured from low-lead alloys.

D. Consideration will only be given to suppliers who can demonstrate that their valve complies with these specifications having had successful and documented experience of the size, quality, performance and reliability to that specified, and who can successfully demonstrate this criteria to the Engineer.

E. Each manufacturer shall have at least ten (10) years of experience in the design and manufacture of the specified valve.

1.06 WARRANTY

A. Provide a Warranty Certificate typed on company letterhead and signed by an authorized officer of the manufacturer.

B. The instrument manufacturer shall guarantee all components to be furnished under this section to be free from defects in design, materials and workmanship for a period of twenty-four (24) months commencing on the date the instrument was placed in permanent and consistent operation.

C. During the guarantee period, if any part or equipment component is defective or fails to perform when operating at design conditions and if the equipment has been installed and is being operated and maintained in accordance with the written instructions provided by the manufacturer; the manufacturer shall repair or exchange at the discretion of the Owner such defective part(s) free of any and all charges. The cost of labor and all other expenses resulting from the repair or replacement of the defective part(s) and from installation of part(s) furnished by this Warranty shall be borne solely by the manufacturer.

1.07 DELIVERY, STORAGE AND HANDLING

A. Deliver, store, protect and handle products to site under provisions of Sections 016100 and 016500.

B. Deliver and store valves in shipping containers with labeling in place.

1.08 FIELD SERVICES

A. Provide the following field services:
   1. One (1) day totaling eight (8) hours for the pressure relief - pressure sustaining valve manufacturer. During these visits, the representative shall check the installation, make all necessary adjustments, and otherwise place the specified valve into permanent operation as specified in Section 017500 - Starting and Adjusting. As part of startup activities, the

representative shall check the terminal connections and the specific work of the Contractor. Before substantial completion, provide operation and maintenance instruction to the Owner. A complete review of the Operations and Maintenance Manual for the pressure relief - pressure sustaining valve shall be presented at this time.

1.09 SERVICE CONDITIONS

A. All components of the control instruments shall be designed for continuous duty.

B. Provisions shall be made for adjustments or replacements of all parts.

PART 2 - PRODUCTS

2.01 HYDRAULIC CONTROL VALVES

A. Pressure Relief - Pressure Sustaining Valves - Sustaining
   1. The pressure sustaining control valves shall be the CLA-VAL model 650-01, reduced port, hydraulically operated, pilot actuated automatic control valve, or approved equal. Approved alternate manufacturers include Watts and Ross. The control valve sizes shall be as indicated on the drawings.
   2. The valve shall be designed to open and permit flow to relieve upstream pressure once a maximum upstream pressure (setpoint) is reached. The valve shall close to sustain a minimum upstream pressure (setpoint). The valve shall also open to permit flow to maintain a minimum downstream pressure (setpoint).
   3. The valve shall open gradually to prevent surges should the upstream pressure reach its maximum pressure setpoint and when the downstream pressure reaches its minimum pressure set point. The valve shall close quickly when the upstream pressure drops below its minimum pressure setpoint.
   4. Each main valve shall consist of three (3) components: ATSM A536 ductile iron body with seat; ATSM A536 ductile iron cover and bearings; and nylon reinforced Buna-N diaphragm and assembly including stainless steel stem, nut, and spring.
   5. Valves shall fail in the open position.
   6. Pilot and Accessories
      a. Pilot tubes shall be copper with bronze fittings.
      b. Pilot valve shall be ASTM B62 bronze.
      c. Pressure Adjustment Range 20 to 200 psi.
   7. Each valve shall have the following attributes and accessories:
      a. Globe style
      b. Epoxy coated.
      c. Stainless Steel trim
      d. 150 lb. flanged connections
      e. Isolation ball valves
      f. Pressure gauge upstream and downstream: 4 1/2" glycerin-filled, 316SS bourden tube, Ashcroft, type 1379 or equal, two (2) required per valve.

PART 3 - EXECUTION

3.01 GENERAL

A. Install control valves and components in accordance with the written and/or verbal instructions provided by the manufacturer.

B. All components shall be fully tested and verified for service by the manufacturer. Each manufacturer shall provide a MSR.

3.02 INSTALLATION

A. All valves and valve accessories shall be installed by workers thoroughly experienced in such work and all valve work shall be properly supported and aligned and present a neat and workmanlike appearance. All other required temporary or permanent supports for the valves shall be included in this contract to the approval of the Engineer.

B. Secure all floor stands to support members using stainless steel hardware. Field touchup floor stands after installation.

C. Plug valves shall be installed with the pressure side correctly placed.

D. Set valves in a plumb or level position, as applicable.

E. Install check valves for proper direction of flow. Adjust cushion chamber check valve to prevent water hammer at service conditions.

F. Assemble flanged joints by sequencing bolt tightening to make initial contact of flanges and gaskets as flat and parallel as possible. Use suitable lubricants on bolt threads. Tighten bolts gradually and uniformly with a torque wrench.

G. All flanged valves shall be furnished and installed with a Style 128 flange adapter by Dresser Industries, Inc. or equal.

H. Before each valve is installed, pipe lines should be flushed of all chips, scale, and foreign matter.

I. Properly use dielectric fittings and gaskets with dissimilar metals to insure that galvanic and/or electrolytic action does not take place.

J. Coordinate with Electrical Contractor for wiring of solenoid valves and transmitters.

3.03 INSPECTION, HANDLING AND STORAGE

A. Inspection - All valves and accessories are subject to inspection by the Engineer at the point of delivery for manu-facturer, direction of opening, freedom of operation, tightness of pressure-containing bolt, cleanliness of valve ports and especially seating surfaces, handling damage, cracks and any other damage.

B. Valves found to be either defective or damaged shall be rejected and immediately removed from the job site.

C. Handling - All valves shall be loaded and unloaded by lifting with hoists or skidding under control with ropes in order to avoid shock or damage. Under no circumstances shall valves and boxes be dropped.

D. Storage - Valves, joint accessories and other appurtenances, if stored, shall be kept safe from damage. The interior of the valve and the joint accessories shall be kept free from dirt or foreign matter at all times.

E. Perform operating tests on valves as per the manufacturers recommendations as required to determine they are in satisfactory operating condition and do not leak. All valves upon completion of the work shall be checked to determine they are in an open position, unless otherwise indicated.

END OF SECTION

Riverhead Water District

TOWN OF RIVERHEAD, SUFFOLK COUNTY, NEW YORK

INSTALLATION OF WATER MAINS & APPURTENANCES

OLD ORCHARD SUBDIVISION

RDWD 16-51

JANUARY 2017

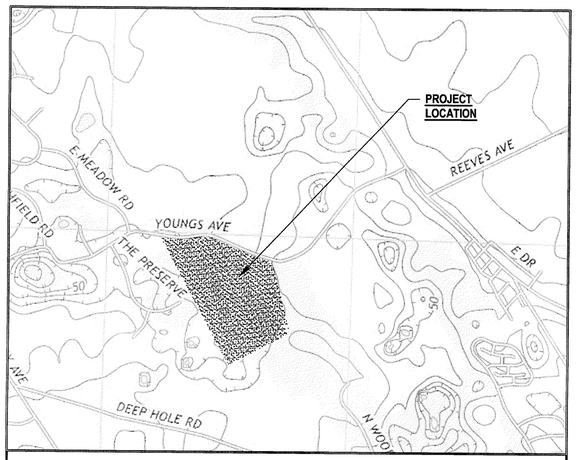

LOCATION MAP
SCALE: 1" = 1000'

SUPERVISOR
Sean Walter

TOWN BOARD
John Dunleavy
Jodi Giglio
Tim Hubbard
James Wooten

TOWN CLERK
Diane Wilhelm

SUPERINTENDENT
Mark Conklin

ASSISTANT SUPERINTENDENT
Thomas Kruger

DRAWING LIST

INFORMATIONAL DRAWINGS

T0.0 COVER SHEET

WATER MAIN DRAWINGS

WM0.0 GENERAL NOTES & LEGEND
WM1.0 WATER MAIN PLAN
WM1.1 WATER MAIN PLAN
WM2.0 PIPING DETAILS
WM2.1 WATER SERVICE DETAILS
WM2.2 CONTROL VALVE & VAULT DETAILS

H2M architects + engineers
737 Roanoke Ave.
Riverhead, NY 11901
631.756.8000 www.h2m.com

STATE OF NEW YORK · JOHN R. POLINS · No. 085205 · LICENSED PROFESSIONAL ENGINEER

"ALTERATION OF THIS DOCUMENT EXCEPT BY A LICENSED PROFESSIONAL IS ILLEGAL"

DESIGNED BY:	DRAWN BY:	CHECKED BY:	REVIEWED BY:
DJR	CJU	JRP	
PROJECT No.: RDWD 16-51	DATE: JANUARY 2017		SCALE:

CLIENT
Riverhead Water District

Old Orchard Subdivision

Baiting Hollow
Riverhead, NY 11933

STATUS
FINAL BID DOCUMENT

DRAWING No. **T0.0**

SHEET No. 1 OF 7

X:\RDWD (Riverhead Water District) - 108109\RDWD1651 - Old Orchard Subdivision\02 - BIM_CAD\Con-docs\mech\WM Plans.dwg Last Modified: Jan 24, 2017 - 3:18pm Plotted on: Jan 24, 2017 - 3:49pm By: drigos

GENERAL NOTES

1. NOTIFICATION AND MISCELLANEOUS

(a) Notify Superintendent Mark Conklin of the Riverhead Water District at (631) 727-3205 prior to starting work, connecting to existing water main, chlorinating and flushing of newly installed water main.

(b) The Contractor must provide advance notice of excavation to each operator of underground facilities listed in the Central Registry of the Town of Riverhead, per Industrial Code 753 (cited as 12 NYCRR 753).

(c) The Contractor shall coordinate all shutdowns of existing mains with the Riverhead Water District and notify all consumers of shutdowns at least twenty-four (24) hours in advance of, and immediately prior to, shutdown.

(d) Location and sizes of all existing water mains and valves shown on the drawings were determined from old records or field inspections. The actual sizes, locations and types shall be verified by the Contractor in the field.

(e) Locations of all underground utilities, gas mains, electric and telephone conduits, and storm drains were obtained from old maps, surveys, drawings or records supplied by others or field inspections performed by utility companies and others. The Riverhead Water District and the Consulting Engineers do NOT guarantee or accept responsibility for any damage to such facilities due to discrepancies in location and size shown on the Plans, nor will any compensation be made to the Contractor for any inconvenience caused him by encountering the aforementioned utilities which are not shown, or incorrectly shown, on the plans.

(f) The Contractor shall perform daily clean-up operations which include sweeping of roadways, sidewalks, etc., removal of debris and excess construction material, all to the satisfaction of the Engineer and the proper road authority.

(g) The Contractor shall conform to the standard traffic requirements of the New York State Manual of Uniform Traffic Control Devices for work in Public Roadways.

(h) Miscellaneous work including protection of existing curbing; hand-digging around and bracing of poles and signs; removing and replacing mailboxes, signs, etc.; protection of underground utilities; crossing under, over or adjacent to underground utilities, surface or subsurface structures; sheeting required due to location of water main and close proximity of existing utilities, curbs, etc.; protection of pedestrian and vehicular traffic, etc., shall be under Item 1.

(i) Drawings do not include necessary components for construction safety. The Contractor should have his insurance company safety engineer visit the job site periodically.

(j) Item numbers indicated in the General Notes and on the plans refer to the standard items listed in Section 012200 of the specifications.

2. SITE PROTECTION AND MISCELLANEOUS WORK

The Contractor shall perform, but not be limited to, the following miscellaneous work under ITEM 1 to install the water main at the proper location:

(a) The Contractor shall place a sufficiency of yellow, type C, steady burn lights on or near any work accessible to the public, and keep them burning sunset to sunrise; it shall erect suitable railings or barriers on the work as required and deemed necessary for the safety of the work.

Under no conditions are flares and mechanical equipment to be left on or operating overnight. ALL EXCAVATIONS ARE TO BE BACKFILLED BEFORE CLOSE OF DAY'S WORK. The entire work area is to be left in a safe condition.

The proposed project is in the vicinity of a developed area and it is the Contractor's responsibility to ensure that sufficient safety precautions are taken during the completion of this contract. Consequently, the Contractor will be responsible for any safety related problems that may occur.

The District reserves the right (after 24 hours notice in writing) to remedy any neglect on the part of the Contractor regarding the protection of the work which may come to its attention; except that in cases of emergency, it shall have the right to remedy any neglect without notice; and in either case to deduct the cost of such remedy from money due the Contractor.

(b) Tunneling under or around existing drains, utilities, manholes or other irremovable structures.

(c) Hand digging around and bracing any poles, signs or other existing surface or subsurface structures.

(d) Tunneling under and protection of concrete curbs.

(e) Any sheeting required due to the location of the water main and proximity of existing utilities, curbs, sidewalks, driveway aprons, etc.

(f) Providing protection of underground utilities such as drains, electrical cables, gas mains, conduits, sewer and sewer laterals, etc., including additional costs to cross under, over or adjacent to these underground utilities.

(g) Abandonment of existing valves including shutting of valve, removal of box, backfill and restoration.

(h) Installation and removal of temporary blow-offs for testing purposes including piping, curb valve and boxes

(i) Installation of concrete blocking, steel tie-rods and restraining glands at all mechanical connections.

3. PIPE

C.L.D.I indicates "Cement-Lined Ductile Iron" water main, thickness class as indicated, with double thickness cement lining and push-on joints. A bituminous coating shall be applied to the outside and inside of all pipes by the manufacturer. Two (2) serrated silicon bronze wedges shall be driven in at each joint for electrical continuity.

THICKNESS CLASS FOR PIPE

PIPE SIZES (INCHES)	DUCTILE IRON	
	THICKNESS SPECIAL CLASS	THICKNESS (INCHES)
6"	52	.31
8"	52	.33
12"	52	.37

4. COVER

Pipe shall be installed to provide the following minimum cover to finished grade:

6-inch diameter - 4 feet, 6 inches
8-inch diameter - 4 feet, 0 inches

5. CHLORINATION

Water mains shall be chlorinated according to the specifications. The Suffolk County Department of Health Services requires the liquid chlorination of mains. New mains shall be flushed prior to testing until a chlorine residual representative of the typical operating parameters of the Water District is achieved.

6. SPECIAL CASTINGS

Cement-lined mechanical joint fittings shall be used with "push-on" joint pipe. Wedge style restraining glands shall be installed on all mechanical connections. In addition, two 3/4" steel tie rods with anchoring clamps and eye-bolts shall be utilized at all M.J. fittings.

Both compact and full-bodied fittings are approved for use. Payment shall be made under Item 2 based on the actual weights of the fittings used as listed by the manufacturer.

7. VALVES AND VALVE BOXES

New mechanical joint gate valves and sliding-type valve boxes shall be installed at locations indicated on the plans, for sizes up to 12-inch in diameter.

8. HYDRANTS

This site is located in the Riverhead Fire District and all hydrants shall conform to Riverhead Fire District standards. Hydrants shall be safety flange, "O" ring seal, 4-1/2" internal valve opening, drain type, with two 2-1/2" hose nozzles and one 4-1/2" steamer connection with NATIONAL STANDARD threads. Colors shall be orange barrel with reflecting aluminum top and caps.

All hydrants shall have a minimum 5-foot depth of bury, 6-inch inlet with mechanical joint end.

All hydrant valves shall be anchored to tees by means of special mechanical joint anchoring fittings or tie rods. All hydrants shall be strapped or rodded to the hydrant valve or hydrant tee. All hydrant branches shall be 6-inch, cement-lined ductile iron pipe.

9. CONNECTION TO EXISTING MAIN

Cut-ins to existing water mains to make connections shall be done in accordance with the Riverhead Water District specifications. Connections to existing main shall be performed only after satisfactory testing of new mains is complete unless otherwise noted or as approved by Engineer/District to allow introduction of water into the new mains for testing purposes. Where a future connection is proposed a 2" temporary blowoff and sampling point shall be installed under Item 1.

10. WATER MAIN SHUTDOWNS

The Water Main Contractor shall not operate any existing valves or hydrants. The Riverhead Water District shall be notified 24 hours prior to the commencement of water main installation and 24 hours prior to requiring a shutdown on existing mains.

11. TRENCH COMPACTION

Trench compaction on all water main trenches shall be performed by either jetting or mechanical tamping methods. Where jetting is performed, the Contractor shall utilize a NYS Health Department approved reduced pressure zone device

12. APPROVAL

All work in conjunction with the water services, water main, appurtenances and restoration shall be performed in accordance with the Standard Specifications of the Riverhead Water District, to the approval of the Engineer and the District and in accordance with the New York State Sanitary Code.

The transfer of water services to and activation of the new water mains is dependent on the receipt of "Completed Works" from the Suffolk County Dept. of Health Services.

13. PERMITS

The water main contractor shall obtain a road opening permit from the Town of Riverhead for work on Young's Avenue and Mastro Court. The permit shall be in the name of the water main contractor.

14. TEMPORARY ASPHALT PAVEMENT

Temporary asphaltic pavement shall consist of 2" (compacted) hot plant mix and shall be installed in all areas where existing asphalt roadways, driveways, and sidewalks are removed to facilitate installation of new water main. All costs for the installation, maintenance, and removal of temporary asphalt pavement shall be included under Item 29. The Contractor shall maintain temporary asphalt until final restoration is complete at no additional cost.

15. PAVEMENT RESTORATION

Final pavement restoration for Youngs Avenue and Mastro Court shall consist of 2" top course over 4" base course over 6" RCA subbase. Where the existing pavement is thicker than that specified, the contractor shall increase the depth of the base course to match the existing thickness. Costs to be included under ITEM 10A.

Limits of the final asphalt restoration shall consist of the trench width plus a minimum of a 12-inch cut-back on each side of trench. The maximum trench width is 5' wide unless otherwise noted. Where the edge of the paving limits fall within three feet of an existing curb, final restoration shall include up to the face of curb. The contractor shall minimize the limits of restoration at points of connection to existing water mains.

The contractor shall replace all pavement markings and line stripping disturbed as a result of the water main installation in accordance with the contract specifications and appropriate road agency.

16. FINAL RESTORATION

All areas disturbed during construction shall be permanently restored at the completion of the project, including but not limited to asphalt and concrete roadways/driveways, concrete curbs, sidewalks, gutters, and grass/landscape areas.

17. WORKING HOURS

Working hours shall be Monday through Friday, 8:00 a.m. - 4:30 p.m. or as dictated by appropriate road agency. The contractor shall be responsible for coordinating with Town of Riverhead. Road closures of any kind shall be in accordance with permit requirements.

18. MAINTENANCE & PROTECTION OF TRAFFIC (M.P.T.)

All costs for M.P.T., including flagmen, barrels, cones, signage, & arrow boards shall be included in the bid prices for ITEM 1. MPT requirements shall be as stipulated in the appropriate road permits and be in accordance with the Manual of Uniform Traffic Control Devices. It is required that local traffic and emergency vehicles be granted access to all roads and residences along the proposed water main route at all times. The use of arrow boards & multiple flagmen may be required. The contractor shall provide the road agency with a M.P.T. plan suitable for issuance of the road opening permit and submit to the engineer for record prior to the commencement of work.

19. INCOMPLETE UTILITY INFORMATION

The contractor shall test hole and locate top and bottom of all marked and known buried utility facilities, including water, prior to performing any excavation. No additional payment will be made for delays associated with hitting of marked or mis-marked utilities due to lack of digging the proper size, quantity and depth of test holes. Excavation of test holes shall be included in the bid prices for ITEM 1.

The contractor is solely responsible for ensuring that the mark-out of all utilities is completed both on the public right of way and on private property. Any costs associated with the mark-out shall be included in ITEM 1.

20. WATER SERVICES

Water services shall be installed from the main to approximately. 10'-0" in back of the curb line. meter pits shall be installed approximately 5'-0" from the curb. Exact locations and lengths shall be determined in the field by the developer and the Water District.

Service taps and copper tubing shall be installed only after approval of the pressure test and bacteriological sampling. No separate payment will be made to remobilize to install the services.

LEGEND

- EXISTING WATER VALVE
- EXISTING HYDRANT ASSEMBLY
- EXISTING TEE
- EXISTING CROSS
- EXISTING REDUCER
- EXISTING PLUG
- EXISTING PLUG & BLOW-OFF
- EXISTING BENDS (ANGLES VARY)
- EXISTING SLEEVE
- PROPOSED WATER VALVE
- PROPOSED HYDRANT ASSEMBLY
- PROPOSED TEE
- PROPOSED CROSS
- PROPOSED REDUCER
- PROPOSED CAP/PLUG
- PROPOSED PLUG & BLOW-OFF
- PROPOSED BENDS (ANGLES VARY)
- PROPOSED SLEEVE
- PROPOSED CURB STOP
- PROPOSED BENDS (ANGLES VARY)
- TRAFFIC SIGN
- UTILITY POLE
- LEACHING POOL
- CATCH BASIN
- MANHOLE
- TREE
- EXISTING WATER MAIN
- ABANDONED WATER MAIN
- EXISTING WATER SERVICE
- EXISTING GAS MAIN
- EXISTING SANITARY SEWER
- EXISTING STORM DRAIN
- EXISTING OVERHEAD ELECTRIC
- EXISTING UNDERGROUND ELECTRIC
- EXISTING UNDERGROUND TELEPHONE
- EXISTING FENCE
- PROPOSED WATER MAIN
- PROPOSED WATER SERVICE
- LOT LINE
- RIGHT OF WAY
- PROPERTY LINE

Dig Safely. New York
www.digsafelynewyork.com
Dig Safely and Dig Safely . New York are used under license from Dig Safe System, Inc.

- Call Before You Dig
- Wait The Required Time
- Confirm Utility Response
- Respect The Marks
- Dig With Care

1-800-272-4480

H2M architects + engineers
737 Roanoke Ave.
Riverhead, NY 11901
631.756.8000 • www.h2m.com

CONSULTANTS:

MARK	DATE	DESCRIPTION

STATE OF NEW YORK · JOHN R. COLLINS · 082205 · LICENSED PROFESSIONAL ENGINEER

"ALTERATION OF THIS DOCUMENT EXCEPT BY A LICENSED PROFESSIONAL IS ILLEGAL"

DESIGNED BY:	DRAWN BY:	CHECKED BY:	REVIEWED BY:
DJR	CJU	DC	
PROJECT No.: RDWD 16-51	DATE: JANUARY 2017	SCALE: AS SHOWN	

CLIENT
Riverhead Water District

Old Orchard Subdivision

TOWN OF RIVERHEAD · 1792 · FAX ET PROSPERITAS · PER PROGRESSUM

Baiting Hollow
Riverhead, NY 11933

CONTRACT
INSTALLATION OF WATER MAINS & APPURTENANCES

STATUS
FINAL BID DOCUMENT

SHEET TITLE
GENERAL NOTES & LEGEND

DRAWING # **WM0.0**

SHEET # 2 OF 7

X:\RDWD (Riverhead Water District) - 108\RDWD1651 - Old Orchard Subdivision\02 - BIM_CAD\Con-Doc\Imod\WM Plans.dwg Last Modified: Jan 24, 2017 - 3:17pm Plotted on: Jan 24, 2017 - 3:37pm By:dcgos

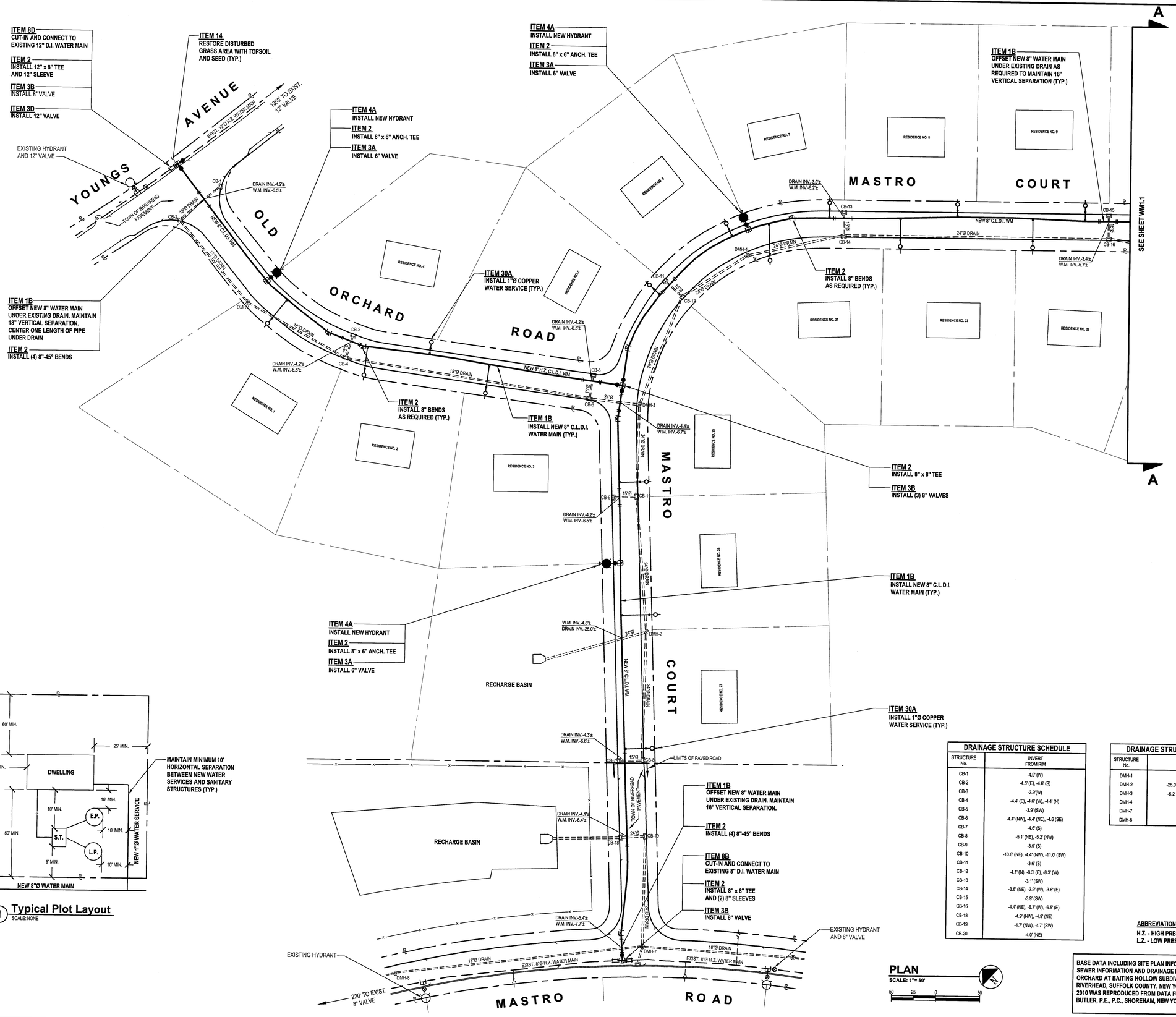

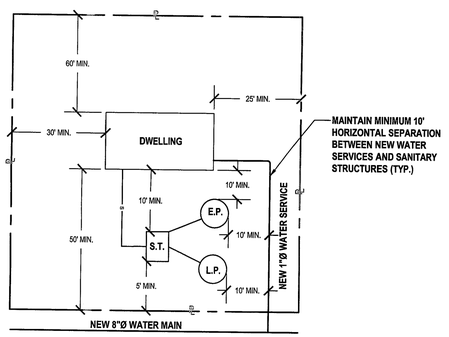

1 **Typical Plot Layout**
SCALE: NONE

DRAINAGE STRUCTURE SCHEDULE

STRUCTURE No.	INVERT FROM RIM
CB-1	-4.9' (W)
CB-2	-4.5' (E), -4.6' (S)
CB-3	-3.9'(W)
CB-4	-4.4' (E), -4.6' (W), -4.4' (N)
CB-5	-3.9' (SW)
CB-6	-4.4' (NW), -4.4' (NE), -4.6 (SE)
CB-7	-4.6' (S)
CB-8	-5.1' (NE), -5.2' (NW)
CB-9	-3.9' (S)
CB-10	-10.8' (NE), -4.4' (NW), -11.0' (SW)
CB-11	-3.6' (S)
CB-12	-4.1' (N), -8.3' (E), -8.3' (W)
CB-13	-3.1' (SW)
CB-14	-3.6' (NE), -3.9' (W), -3.6' (E)
CB-15	-3.9' (SW)
CB-16	-4.4' (NE), -6.7' (W), -6.5' (E)
CB-18	-4.9' (NW), -4.9' (NE)
CB-19	-4.7' (NW), -4.7' (SW)
CB-20	-4.0' (NE)

DRAINAGE STRUCTURE SCHEDULE

STRUCTURE No.	INVERT FROM RIM
DMH-1	-5.8' (N), -6.6' (S)
DMH-2	-25.0' (NW), -14.7' (SW), -5.2' (NE)
DMH-3	-5.2' (NW), -6.6' (NE), -14.4' (SW)
DMH-4	-6.6' (SE), -6.8' (SW)
DMH-7	-5.4' (E), -4.3' (W)
DMH-8	-9.6' (NW), -9.6 (NE)

ABBREVIATION NOTES

H.Z. - HIGH PRESSURE ZONE
L.Z. - LOW PRESSURE ZONE

BASE DATA INCLUDING SITE PLAN INFORMATION, SANITARY SEWER INFORMATION AND DRAINAGE INFORMATION OF "OLD ORCHARD AT BAITING HOLLOW SUBDIVISION", TOWN OF RIVERHEAD, SUFFOLK COUNTY, NEW YORK DATED MARCH 4, 2010 WAS REPRODUCED FROM DATA FURNISHED BY JEFFREY T. BUTLER, P.E., P.C., SHOREHAM, NEW YORK 11786.

H2M architects + engineers
737 Roanoke Ave.
Riverhead, NY 11901
631.756.8000 • www.h2m.com

CONSULTANTS:

MARK	DATE	DESCRIPTION

STATE OF NEW YORK • JOHN R. COLLINS • 085205 • LICENSED PROFESSIONAL ENGINEER

"ALTERATION OF THIS DOCUMENT EXCEPT BY A LICENSED PROFESSIONAL IS ILLEGAL"

DESIGNED BY:	DRAWN BY:	CHECKED BY:	REVIEWED BY:
DJR	CJU		
PROJECT No.: RDWD 16-51	DATE: JANUARY 2017	SCALE: AS SHOWN	

CLIENT
Riverhead Water District

Old Orchard Subdivision

Baiting Hollow
Riverhead, NY 11933

CONTRACT
INSTALLATION OF WATER MAINS & APPURTENANCES

STATUS
FINAL BID DOCUMENT

SHEET TITLE
WATER MAIN PLAN

DRAWING # **WM1.0**

SHEET # 3 OF 7

X:\RDWD (Riverhead Water District) - 108\16\RDWD16\51 - Old Orchard Subdivision\02- BIM_CAD\Con-boc\mech\WM Sheets.dwg Last Modified: Jan 24, 2017 - 3:11pm Plotted on: Jan 24, 2017 - 3:28pm By dhjpa

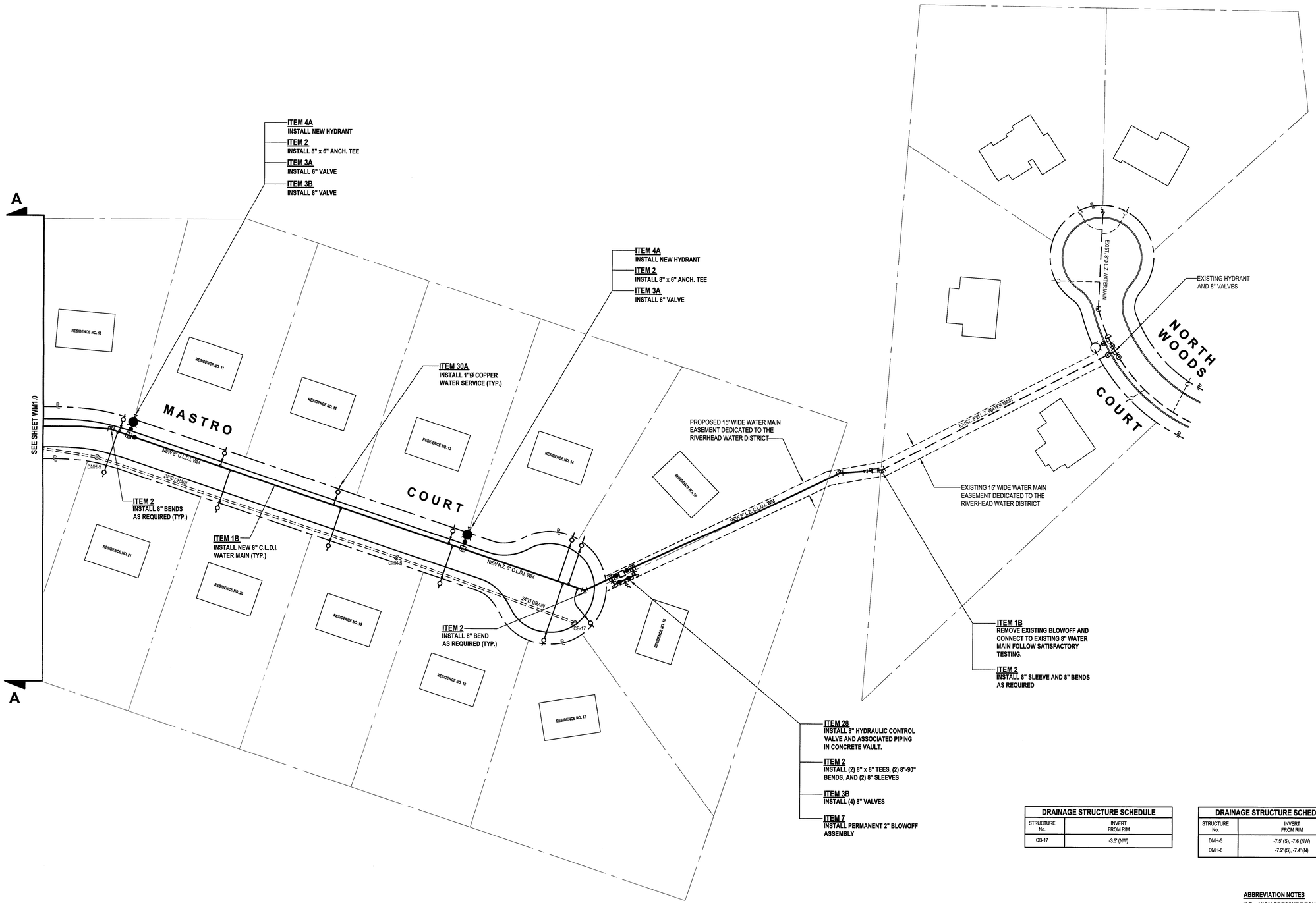

PLAN
SCALE: 1"= 50'
50 25 0 50

DRAINAGE STRUCTURE SCHEDULE	
STRUCTURE No.	INVERT FROM RIM
CB-17	-3.5' (NW)

DRAINAGE STRUCTURE SCHEDULE	
STRUCTURE No.	INVERT FROM RIM
DMH-5	-7.5' (S), -7.5 (NW)
DMH-6	-7.2' (S), -7.4' (N)

ABBREVIATION NOTES
H.Z. - HIGH PRESSURE ZONE
L.Z. - LOW PRESSURE ZONE

BASE DATA INCLUDING SITE PLAN INFORMATION, SANITARY SEWER INFORMATION AND DRAINAGE INFORMATION OF "OLD ORCHARD AT BAITING HOLLOW SUBDIVISION", TOWN OF RIVERHEAD, SUFFOLK COUNTY, NEW YORK DATED MARCH 4, 2010 WAS REPRODUCED FROM DATA FURNISHED BY JEFFREY T. BUTLER, P.E., P.C., SHOREHAM, NEW YORK 11786.

H2M architects + engineers
737 Roanoke Ave.
Riverhead, NY 11901
631.756.8000 • www.h2m.com

CONSULTANTS:

MARK	DATE	DESCRIPTION

STATE OF NEW YORK • JOHN P. FOLKINS • LICENSED PROFESSIONAL ENGINEER • NO. 085205

"ALTERATION OF THIS DOCUMENT EXCEPT BY A LICENSED PROFESSIONAL IS ILLEGAL"

DESIGNED BY:	DRAWN BY:	CHECKED BY:	REVIEWED BY:
DJR	CJU	JPF	
PROJECT No.: RDWD 16-51	DATE: JANUARY 2017	SCALE: AS SHOWN	

CLIENT
Riverhead Water District

Old Orchard Subdivision

Baiting Hollow
Riverhead, NY 11933

CONTRACT
INSTALLATION OF WATER MAINS & APPURTENANCES

STATUS
FINAL BID DOCUMENT

SHEET TITLE
WATER MAIN PLAN

DRAWING # **WM1.1**

SHEET # 4 OF 7

X:\RDWD (Riverhead Water District) - 1901\RDWD1651 - Old Orchard Subdivision\02- BIM_CAD\Construction\WM Sheets.dwg Last Modified: Jan 24, 2017 - 3:11pm Plotted on: Jan 24, 2017 - 3:30pm By dfigus

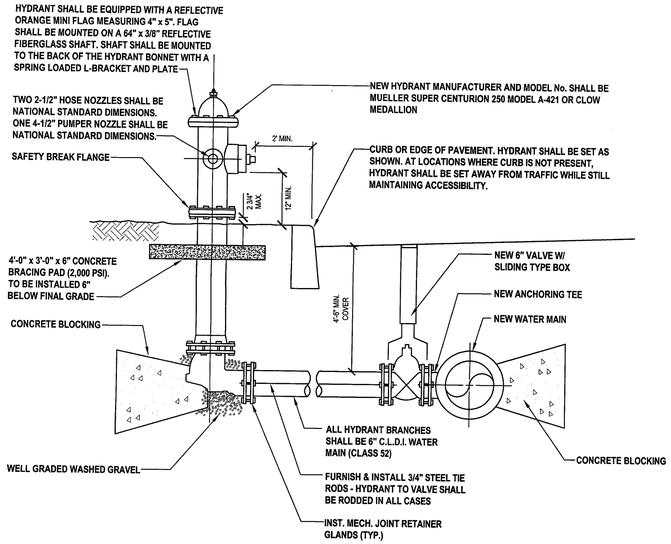

1 **Typical Hydrant Installation Detail**
SCALE: NONE

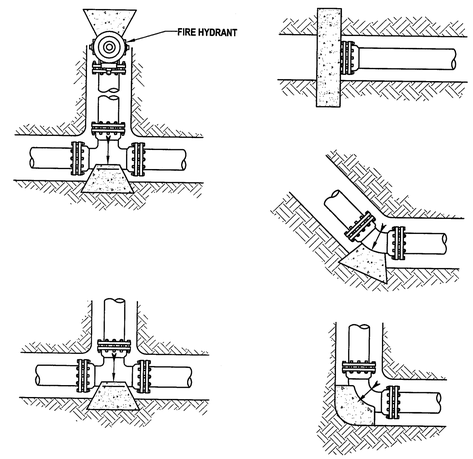

2 **Thrust Block Location Details**
SCALE: NONE

NOTES:

1. CONCRETE BLOCKING SHALL BE APPLIED ON ALL PIPE LINES 4-INCH IN DIAMETER AND LARGER AT ALL TEES, PLUGS, CAPS, AND AT BENDS DEFLECTING 22 1/2 DEGREES OR MORE. BLOCKING SHALL BE OF CONCRETE OF A MIX HAVING A COMPRESSIVE STRENGTH OF NOT LESS THAN 2,000 PSI, AND BLOCKING SHALL BE PLACED BETWEEN SOLID GROUND AND THE FITTING TO BE ANCHORED. THE BLOCKING SHALL BE PLACED SO THAT THE PIPE AND FITTING JOINTS WILL BE ACCESSIBLE FOR REPAIR.

2. THE SQUARE FOOT BEARING AREA OF THE BLOCKING ON SOLID GROUND SHALL BE INDICATED IN THE TABLE FOLLOWING OR AS INDICATED BY THE ENGINEER:

PIPE SIZE	DEAD END OR TEE	90° BEND	45° BEND	22 1/2° BEND
4"	1	1-1/2	3/4	1/2
6"	2	3	2	1
8"	4	5-1/2	3	1
10"	6	8-1/2	4-1/2	2-1/2
12"	9	12	6-1/2	3-1/2
16"	12	15-1/2	8-1/2	4-1/2
20"	15	18-1/2	10-1/2	5-1/2

3. FOR ALL VERTICAL BENDS, 3/4-INCH DIAMETER TIE RODS AND PIPE CLAMPS OR WEDGE TYPE RESTRAINING GLANDS SHALL BE PROVIDED IN ADDITION TO THE CONCRETE BLOCKING SPECIFIED ABOVE FOR BENDS DEFLECTING 22-1/2 DEGREES OR MORE.

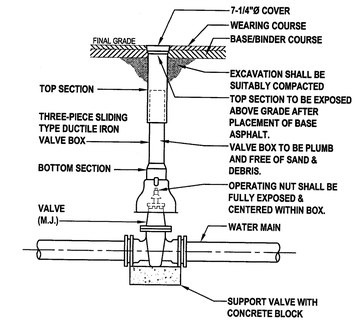

3 **Valve Box Installation Detail**
SCALE: NONE

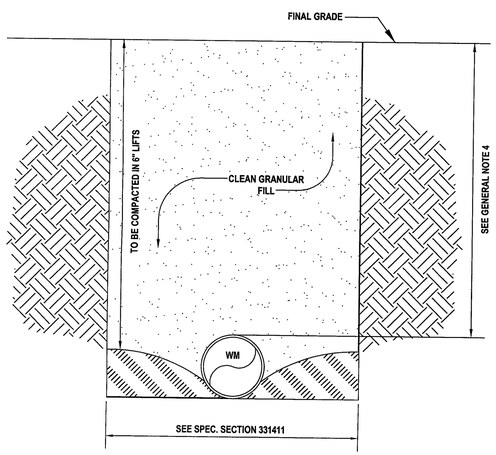

4 **Typical Trench Detail**
SCALE: NONE

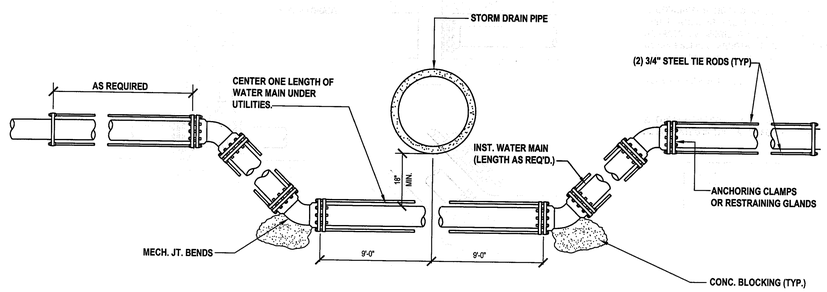

5 **Water Main Offset Detail**
SCALE: NONE

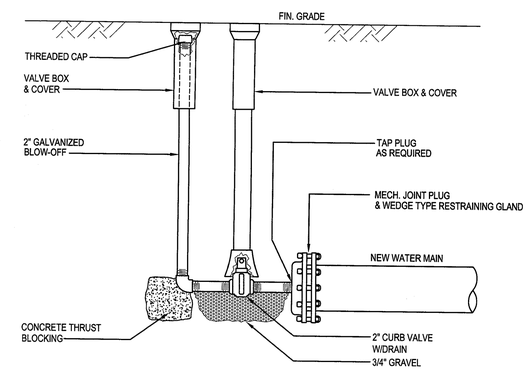

6 **Temporary 2" Blow-Off Detail**
SCALE: NONE

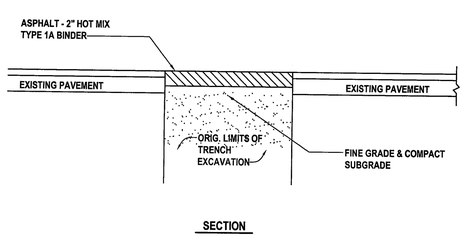

7 **Temporary Asphalt Detail**
SCALE: NONE

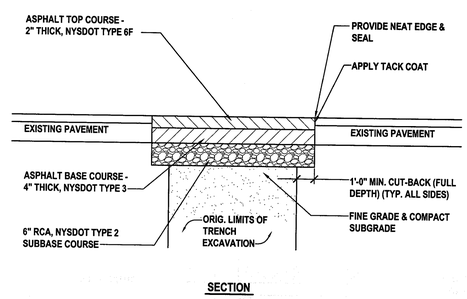

8 **Town of Riverhead Asphalt Detail**
SCALE: NONE

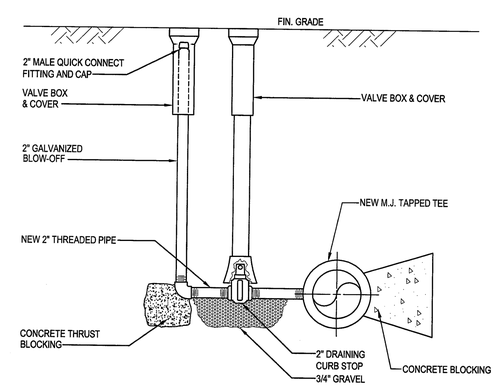

9 **Permanent 2" Blow-off Detail**
SCALE: NONE

H2M architects + engineers
737 Roanoke Ave.
Riverhead, NY 11901
631.756.8000 • www.h2m.com

CONSULTANTS:

MARK	DATE	DESCRIPTION

STATE OF NEW YORK • JOHN R. COLLINS • 085205 • LICENSED PROFESSIONAL ENGINEER

"ALTERATION OF THIS DOCUMENT EXCEPT BY A LICENSED PROFESSIONAL IS ILLEGAL"

DESIGNED BY:	DRAWN BY:	CHECKED BY:	REVIEWED BY:
DJR	CJU	JRC	-

PROJECT No.:	DATE:	SCALE:
RDWD 16-51	JANUARY 2017	AS SHOWN

CLIENT
Riverhead Water District

Old Orchard Subdivision

TOWN OF RIVERHEAD 1792 PAX ET PROSPERITAS PER PROGRESSUM

Baiting Hollow
Riverhead, NY 11933

CONTRACT
INSTALLATION OF WATER MAINS & APPURTENANCES

STATUS
FINAL BID DOCUMENT

SHEET TITLE
PIPING DETAILS

DRAWING #
WM2.0

SHEET # 5 OF 7

X:\RDWD (Riverhead Water District) - 108\RDWD\165\1 - Old Orchard Subdivision\02 - BIM_CAD\Con-docs\mech\WM Plans.dwg Last Modified: Jan 24, 2017 - 3:37pm Plotted on: Jan 24, 2017 - 3:37pm By: dgoga

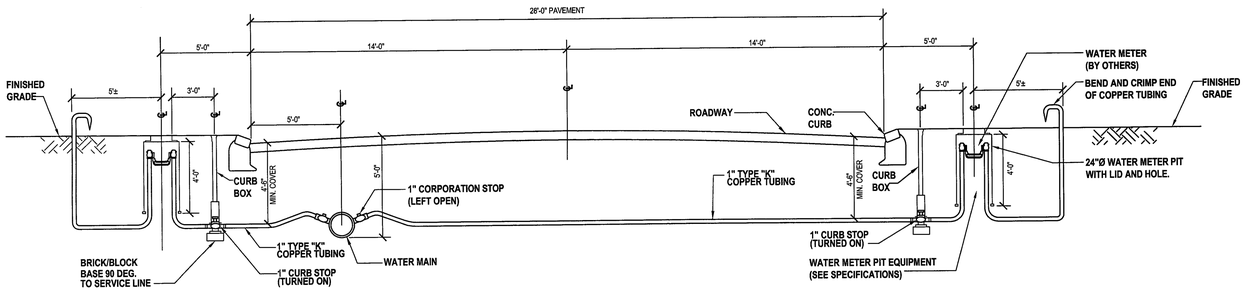

1 Typical New Water Service Detail

SCALE: NONE

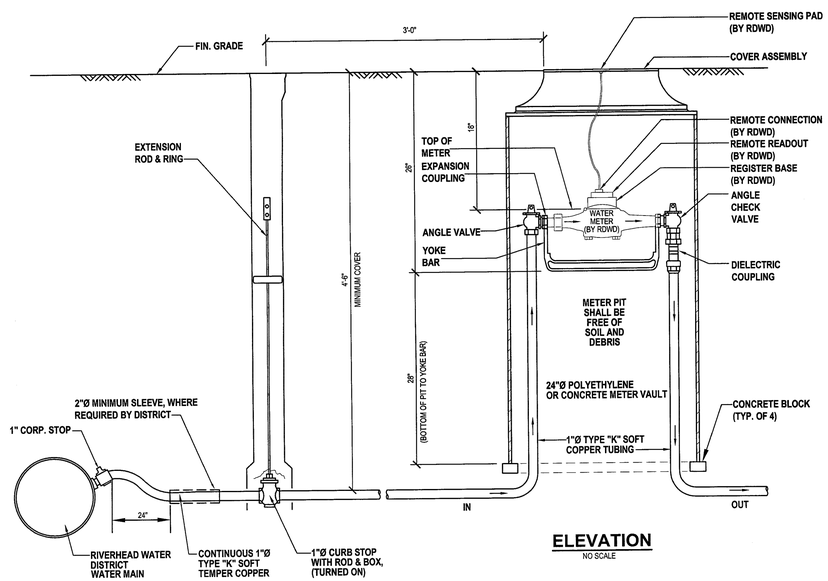

ELEVATION

NO SCALE

2 1" Water Meter Pit Detail

SCALE: NONE

WATER SERVICE NOTES:

1. NEW WATER SERVICE LINES SHALL BE INSTALLED ONLY TO PARCELS INDICATED ON THE PLANS OR WHERE DIRECTED BY THE ENGINEER AND/OR RIVERHEAD WATER DISTRICT.
2. ALL SERVICES SHALL BE INSTALLED TO THE STANDARDS OF THE RIVERHEAD WATER DISTRICT.
3. THE CONTRACTOR SHALL INSTALL THE TAPS AND NEW SERVICE LINES ONLY AFTER SATISFACTORY PRESSURE, LEAKAGE AND BACTERIOLOGICAL TESTS ON THE NEW WATER MAIN HAVE BEEN PERFORMED BY THE CONTRACTOR AND APPROVED BY THE ENGINEER.
4. WORK TO INCLUDE FURNISHING AND INSTALLING 1" CORPORATION STOP, 1" TYPE "K" COPPER TUBING, CURB STOP AND CURB BOX, METER PIT, YOKE, INLET ANGLE VALVE, OUTLET ANGLE CHECK VALVE & ALL RESTORATION. THE 1" METER AND ASSOCIATED REMOTE READ HARDWARE SHALL BE SUPPLIED & INSTALLED BY RIVERHEAD WATER DISTRICT PERSONNEL AT A LATER DATE.
5. ALL COPPER SERVICE PIPE SHALL BE IN ONE CONTINUOUS PIECE BETWEEN THE CORPORATION STOP AND THE CURB STOP.
6. WATER SERVICE LOCATIONS ARE SHOWN AT ARBITRARY LOCATIONS ON THE PLAN. THE DEVELOPER IS RESPONSIBLE FOR MARKING THE PROPOSED LOCATIONS OF WATER SERVICES FOR EACH LOT REQUIRING A NEW SERVICE.
7. THE EXACT LOCATION OF THE PROPOSED CURB STOP AND BOX MAY BE VARIED BETWEEN THE CURB LINE AND PROPERTY LINE AT THE DISCRETION OF THE RIVERHEAD WATER DISTRICT.
8. THE CONTRACTOR SHALL ONLY INSTALL NEW WATER SERVICE LINES ONLY AFTER FINISHED GRADE IS ESTABLISHED BY THE DEVELOPER.
9. THE CONTRACTOR SHALL INSTALL A 1-1/4" GALVANIZED IRON, JUMPER WITHIN EACH OF THE METER PITS FOR PRESSURE TESTING PURPOSES. JUMPER SHALL BE REMOVED BY WATER MAIN CONTRACTOR FOLLOWING APPROVAL BY ENGINEER.
10. METER PITS SHALL NOT BE INSTALLED IN SIDEWALK, DRIVEWAYS OR PARKING AREAS.
11. METER PITS SHALL BE SET AT 3"±1" (1/4" PER FOOT) ABOVE FINAL CURB GRADE UNLESS OTHERWISE SPECIFIED BY THE DEVELOPER. WHERE EXISTING GRADE OF INDIVIDUAL LOTS EXCEEDS A 1/4" SLOPE, THE CONTRACTOR SHALL INSTALL THE PITS AT OR CLOSE TO EXISTING GRADE OR AS SPECIFIED BY THE DEVELOPER.

H2M architects + engineers
737 Roanoke Ave.
Riverhead, NY 11901
631.756.8000 • www.h2m.com

CONSULTANTS:

MARK	DATE	DESCRIPTION

STATE OF NEW YORK · JOHN R. POLLINS · 086205 · LICENSED PROFESSIONAL ENGINEER

"ALTERATION OF THIS DOCUMENT EXCEPT BY A LICENSED PROFESSIONAL IS ILLEGAL"

DESIGNED BY:	DRAWN BY:	CHECKED BY:	REVIEWED BY:
DJR	CJU	JPC	

PROJECT No.:	DATE:	SCALE:
RDWD 16-51	JANUARY 2017	AS SHOWN

CLIENT

Riverhead Water District

Old Orchard Subdivision

Baiting Hollow
Riverhead, NY 11933

CONTRACT

INSTALLATION OF WATER MAINS & APPURTENANCES

STATUS

FINAL BID DOCUMENT

SHEET TITLE

WATER SERVICE DETAILS

DRAWING # **WM2.1**

SHEET # 6 OF 7

X:\RDWD (Riverhead Water District) - 108\105\RDWD161 - Old Orchard Subdivision\02 - BWL CAD\Construction\WM Plans.dwg-Last Modified: Jan 24, 2017 - 3:18pm Plotted on: Jan 24, 2017 - 3:38pm By dvigos

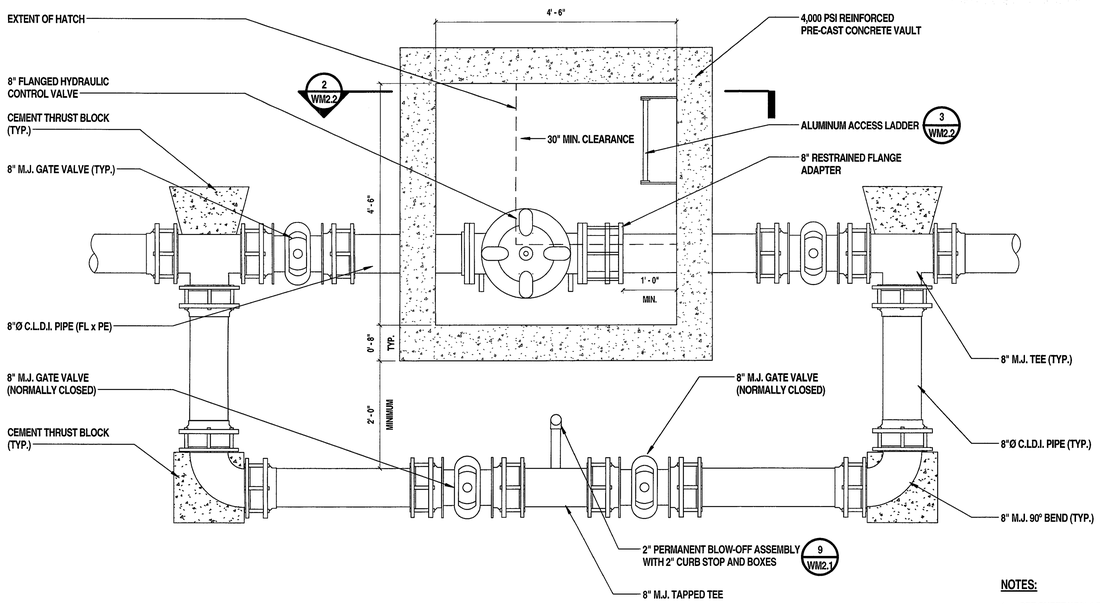

1 **Control Valve Vault Plan**
SCALE: 3/4" = 1'-0"

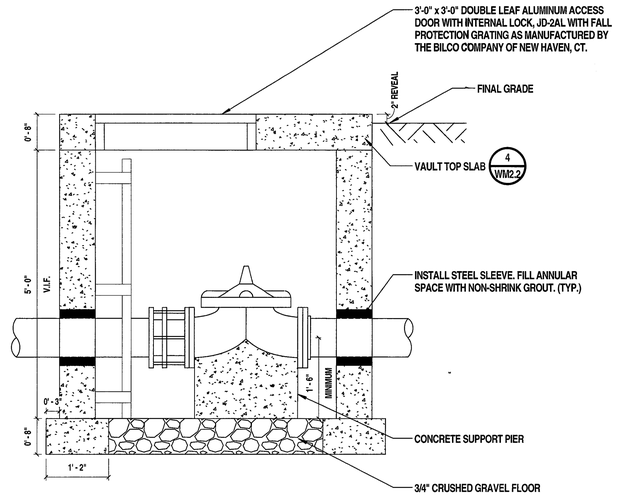

2 **Control Valve Vault Section**
SCALE: 3/4" = 1'-0"

NOTES:

1. SEE SHEET WM1.1 FOR LOCATION OF CONTROL VALVE VAULT.
2. ALL M.J. FITTINGS, VALVES, AND PIPING OUTSIDE NEW VAULT SHALL BE PAID UNDER THEIR RESPECTIVE BID ITEMS.
3. ITEM 28 SHALL INCLUDE ALL WORK AND MATERIAL ASSOCIATED WITH THE INSTALLATION OF NEW PRE-CAST CONCRETE VAULT, 8-INCH HYDRAULIC CONTROL VALVE, PIPING AND FITTINGS INSIDE NEW VAULT, ALUMINUM ACCESS LADDER, AND DOUBLE LEAF ALUMINUM HATCH AS SPECIFIED.

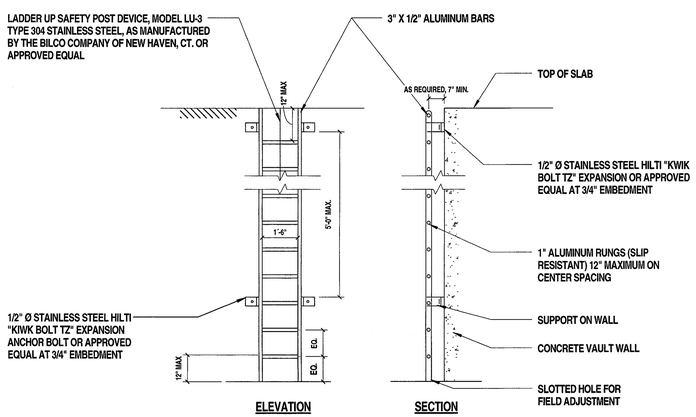

3 **Access Ladder Detail**
SCALE: 12" = 1'-0"

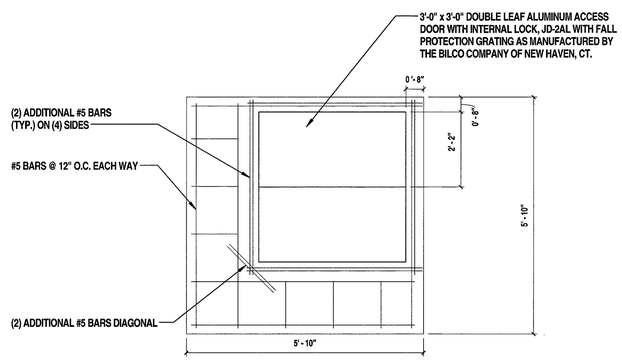

4 **Vault Top Slab Detail**
SCALE: NTS

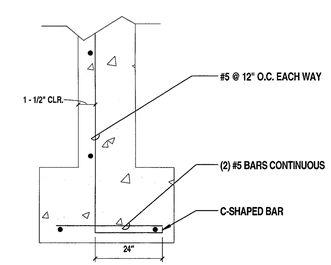

5 **Typical Vault Wall Reinforcing Detail**
SCALE: NTS

H2M architects + engineers
737 Roanoke Ave.
Riverhead, NY 11901
631.756.8000 • www.h2m.com

CONSULTANTS:

MARK	DATE	DESCRIPTION

STATE OF NEW YORK · JOHN R. COSGRIS · 085205 · LICENSED PROFESSIONAL ENGINEER

"ALTERATION OF THIS DOCUMENT EXCEPT BY A LICENSED PROFESSIONAL IS ILLEGAL"

DESIGNED BY:	DRAWN BY:	CHECKED BY:	REVIEWED BY:
DJR	SLM	JFC	

PROJECT No:	DATE:	SCALE:
RDWD 16-51	JANUARY 2017	AS SHOWN

CLIENT
Riverhead Water District

Old Orchard Subdivision

Baiting Hollow
Riverhead NY 11933

CONTRACT
INSTALLATION OF WATER MAINS & APPURTENANCES

STATUS
FINAL BID DOCUMENT

SHEET TITLE
CONTROL VALVE & VAULT DETAILS

DRAWING No. **WM2.2**

SHEET No. 7 OF 7

C:\Users\dsigner\Documents\RDWD1651_Control13_Vault_dsigner.rvt

1/24/2017 3:43:51 PM