Riverhead Water District

Town of Riverhead
Suffolk County, New York

Rehabilitation of Plant No. 4

Contract E - Electrical Upgrades
Contract M - Lime System Replacement

RDWD1904

SEPTEMBER 2019

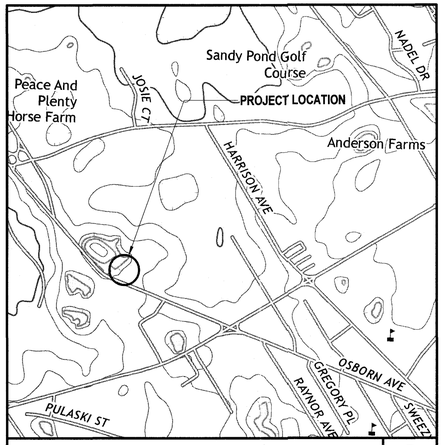

SITE LOCATION MAP
SCALE: NTS

TOWN SUPERVISOR
Laura Jens-Smith

TOWN COUNCIL
Jodi Giglio
Timothy Hubbard
Catherine Kent
James Wooten

TOWN CLERK
Diane Wilhelm

SUPERINTENDENT
Frank Mancini

ASSISTANT SUPERINTENDENT
Thomas Kruger

PROJECT SHEET LIST

SHEET NO.	SHEET NAME
T0.0	TITLE SHEET
SP1.0	SITE PLAN AND GENERAL NOTES
M1.0	WELL HOUSE NO. 4 REMOVALS PLAN
M2.0	WELL HOUSE NO. 4 PROPOSED FLOOR PLAN
M3.0	LIME TANK AND DETAILS
E0.0	ELECTRICAL LEGENDS
E1.0	WELL HOUSE NO. 4 ELECTRICAL REMOVALS PLAN
E2.0	WELL HOUSE NO. 4 POWER PLAN
E3.0	WELL HOUSE NO. 4 ROOF POWER PLAN
E4.0	ELECTRICAL SINGLE LINE DIAGRAM
E5.0	ELECTRICAL MCC ELEVATION PLAN
E6.0	ELECTRICAL SCHEDULES
E7.0	ELECTRICAL DETAILS
EI0.0	INSTRUMENTATION AND CONTROL LEGENDS
EI1.0	INSTRUMENTATION AND CONTROL PLAN
EI2.0	INSTRUMENTATION AND CONTROL DETAILS AND DIAGRAMS

H2M architects + engineers
538 Broad Hollow Road, 4th Floor East
Melville, NY 11747
631.756.8000 • www.h2m.com

STATE OF NEW YORK · JOHN R. COLLINS · No. 086305 · LICENSED PROFESSIONAL ENGINEER

DESIGNED BY:	DRAWN BY:	CHECKED BY:	REVIEWED BY:
SLM	ACP		
PROJECT No: RDWD1904	DATE: SEPTEMBER 2019	SCALE: AS SHOWN	

CLIENT
Riverhead Water District

Rehabilitation of Plant No. 4

1124 Osborn Avenue
Riverhead, NY 11901

Dist:600 Sect:101 Block:03 Lot:001

STATUS
FINAL BID DOCUMENT

DRAWING No.
T0.0

SHEET No. 01 OF 16

C:\Users\smirna\Documents\RDWD1904_Central19_M_v2.0_smirna.rvt
9/11/2019 9:51:50 AM

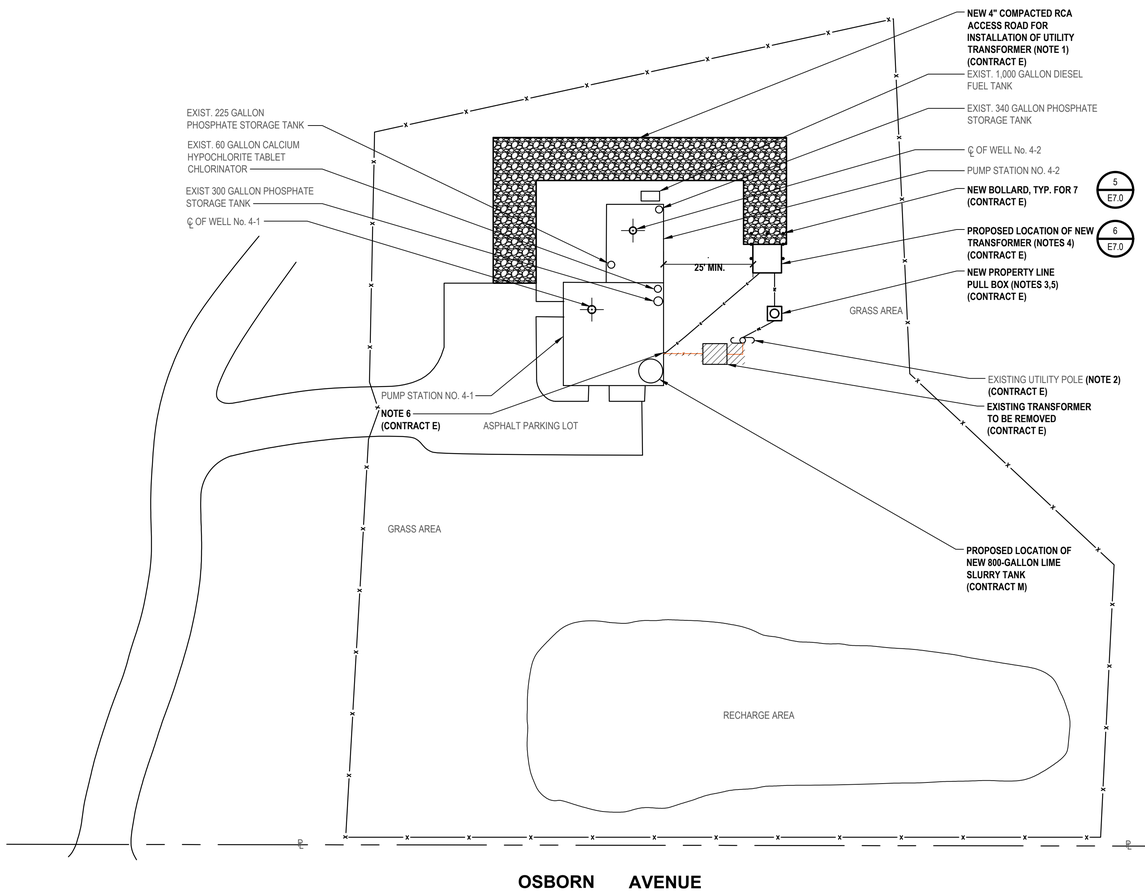

Plant No. 4 Partial Site Plan

SCALE:1 "= 20'

PLANT NO. 4 SITE INFORMATION

OWNER:	RIVERHEAD WATER DISTRICT
OPERATOR:	RIVERHEAD WATER DISTRICT
MAILING ADDRESS:	1035 PULASKI STREET RIVERHEAD, NEW YORK
PHONE:	(631) 727-3205
LOCATION:	1124 OSBORN AVENUE
SECTION: 600	SECTION: 101 BLOCK: 03 LOT: 001
SCHOOL DISTRICT:	537
CONTACT PERSON:	FRANK MANCINI - SUPERINTENDENT

SITE PLAN LEGEND

	CURB
	UTILITY POWER/TELEPHONE POLE
G	EXISTING NATURAL GAS SERVICE
S	EXISTING SEWER SERVICE
W	EXISTING WATER SERVICE
T	EXISTING TELEPHONE SERVICE
T	NEW TELEPHONE SERVICE
E	EXISTING ELECTRICAL LINES
E	NEW ELECTRICAL LINES
PE	EXISTING PRIMARY ELECTRIC SERVICE
PE	NEW PRIMARY ELECTRIC SERVICE
OH/E	EXISTING OVERHEAD ELECTRIC LINES
X X X	EXISTING FENCE
	ELECTRIC PULL BOX
HH	HANDHOLE
T	TRANSFORMER

GENERAL CONSTRUCTION NOTES:

G1. CONTRACTOR SHALL INSPECT CONSTRUCTION SITE PRIOR TO SUBMISSION OF BIDS AND SHALL MAKE NO ADDITIONAL CLAIMS REGARDING SITE CONDITIONS THEREAFTER.

G2. THE CONTRACTOR SHALL NOTIFY H2M ARCHITECTS + ENGINEERS AT LEAST 24 HOURS PRIOR TO THE COMMENCEMENT OF THE WORK (TELEPHONE (631) 756-8000). THE SAME NOTICE SHALL BE REQUIRED WHEN RESUMING WORK AFTER ANY STOPPAGE OR DELAY.

G3. THE CONTRACTOR SHALL PERFORM DAILY CLEAN-UP OPERATIONS WHICH INCLUDE REMOVAL OF DEBRIS AND EXCESS CONSTRUCTION MATERIAL, TO THE SATISFACTION OF THE OWNER AND THE ENGINEER.

G4. DURING ALL NON-WORKING HOURS, THE CONTRACTOR WILL BE REQUIRED TO STORE ALL EQUIPMENT AND MATERIALS WITHIN THE AREA DESIGNATED BY THE ENGINEER AT THE PROJECT SITE.

G5. ALL DIMENSIONS SHOWN ARE APPROXIMATE AND SUBJECT TO REVISION AS PER EQUIPMENT MANUFACTURER'S RECOMMENDATIONS, AND SHALL BE SUBJECT TO THE APPROVAL OF THE ENGINEER.

G6. CONSTRUCTION OF FACILITY SHALL CONFORM TO ALL APPLICABLE STATE AND LOCAL CODE REQUIREMENTS, THE CONTRACT AND SUBJECT TO THE APPROVAL OF THE ENGINEER.

G7. CONTRACTOR SHALL SECURE CONSTRUCTION SITE IN ACCORDANCE WITH APPLICABLE SAFETY STANDARDS.

G8. CONTRACTOR TO COORDINATE ACTIVITIES WITH OWNER/ ENGINEER SO AS TO MINIMIZE INTERRUPTION TO WATER PLANT.

G9. CONTRACTOR IS RESPONSIBLE FOR RESTORATION OF SURROUNDING AREAS DAMAGED DURING CONSTRUCTION.

G10. ALL AREAS DISTURBED BY WORK SHALL BE RESTORED TO PRE-EXISTING OR SPECIFIED NEW CONDITIONS.

G11. PROVIDE TEMPORARY FENCING TO PROTECT WORK AREAS.

G12. PROTECT EXISTING STRUCTURES DURING WORK.

CONSTRUCTION KEY NOTES:

1. ACCESS ROAD SHALL BE INSTALLED AS REQUIRED BY UTILITY. PROVIDE AND INSTALL FILTER FABRIC FOR ENTIRETY OF ACCESS ROAD.
2. NEW ELECTRIC SERVICE RISER AS PER UTILITY REQUIREMENTS.
3. NEW PROPERTY LINE PULL BOX AS PER UTILITY REQUIREMENTS.
4. NEW TRANSFORMER PAD/PULL BOX AS PER UTILITY REQUIREMENTS.
5. NEW PULL BOX. SITE PLAN SHOWS MINIMUM REQUIRED PULL BOXES. PROVIDE ADDITIONAL PULL BOXES AS REQUIRED BY NEC AND UTILITY SERVICE.
6. CONTRACTOR SHALL STUB ALL CONDUITS INTO BUILDINGS BELOW GRADE VIA EXISTING PIPE TRENCH. NO EXTERIOR CONDUITS PERMITTED TO RUN EXPOSED ON EXTERIOR WALLS. CORE DRILL FOUNDATION AS REQUIRED. SEAL ALL CONDUIT PENETRATIONS WITH DUCT SEAL ON THE INTERIOR AND LINK SEALS ON THE EXTERIOR.

H2M architects + engineers
538 Broad Hollow Road, 4th Floor East
Melville, NY 11747
631.756.8000 • www.h2m.com

CONSULTANTS:

MARK	DATE	DESCRIPTION

STATE OF NEW YORK · CHARLES J. STARKE · 090851 · LICENSED PROFESSIONAL ENGINEER

"ALTERATION OF THIS DOCUMENT EXCEPT BY A LICENSED PROFESSIONAL IS ILLEGAL"

DESIGNED BY:	DRAWN BY:	CHECKED BY:	REVIEWED BY:
CJS	SLM		
PROJECT No.: RDWD1904	DATE: SEPTEMBER 2019		SCALE: AS SHOWN

CLIENT
Riverhead Water District

Rehabilitation of Plant No. 4

1124 Osborn Avenue
Riverhead, NY 11901

Dist: 600 Sect:101 Block:03 Lot:001

CONTRACT
ALL CONTRACTS

STATUS
FINAL BID DOCUMENT

SHEET TITLE
SITE PLAN AND GENERAL NOTES

DRAWING No. **SP1.0**

SHEET No. 02 OF 16

X:\RDWD (Riverhead Water District) 108\01\RDWD1904 - Rehabilitation of Plant 4\02-BIM-CADD\Contr-Docs\mech\SP1.0 - Existing Site Plan.dwg Last Modified: Sep 11, 2019 - 9:42am Plotted on: Sep 11, 2019 - 12:37pm By cskigalis

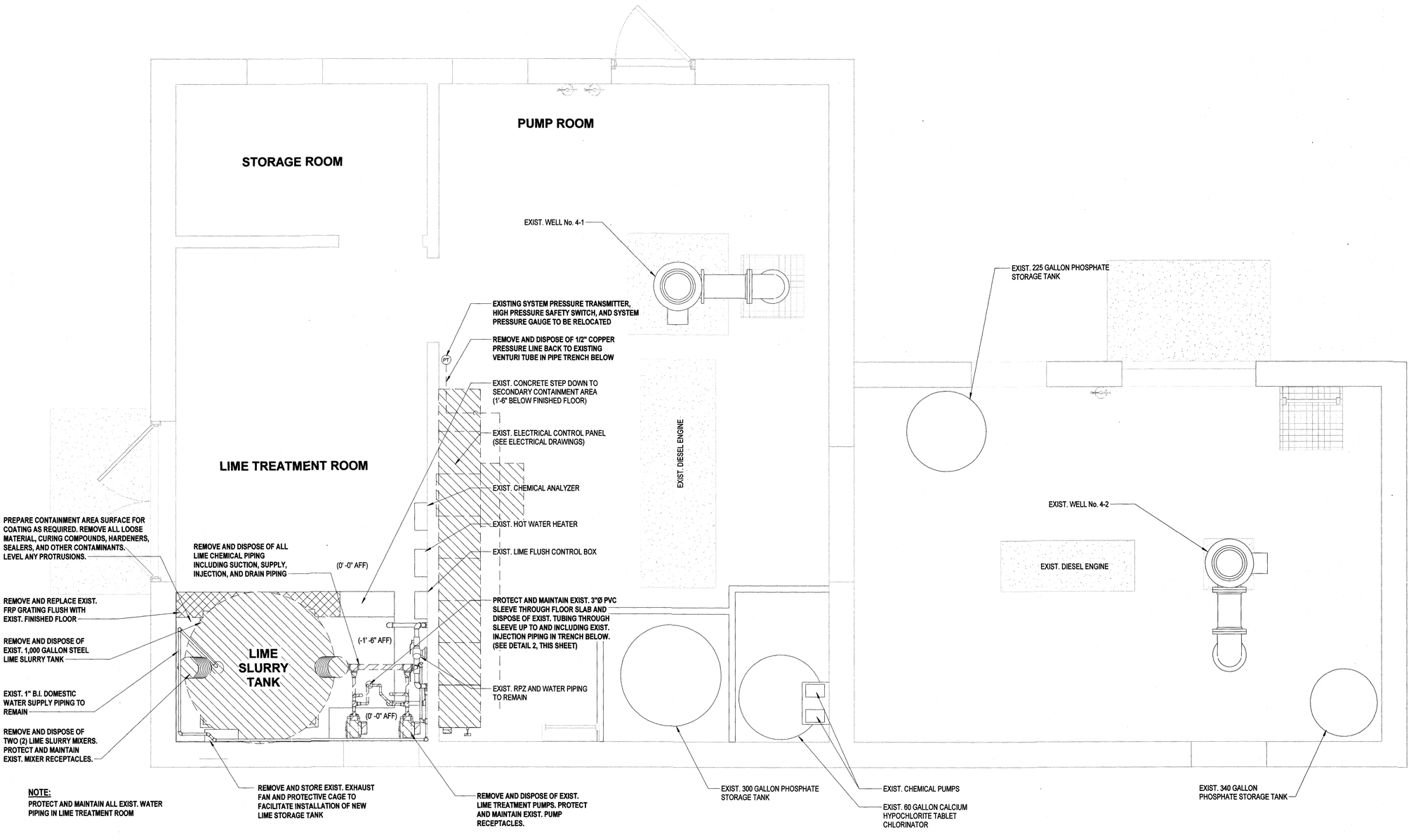

NOTE:
PROTECT AND MAINTAIN ALL EXIST. WATER PIPING IN LIME TREATMENT ROOM

1 Plant No. 4 Removals Plan
SCALE: 1/2" = 1'-0"

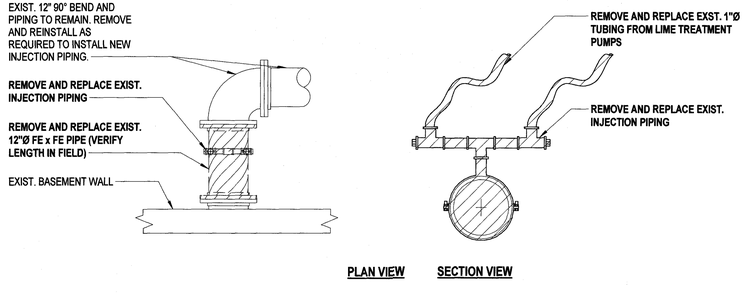

2 Injection Piping Removals Detail
SCALE: NTS

H2M architects + engineers
538 Broad Hollow Road, 4th Floor East
Melville, NY 11747
631.756.8000 • www.h2m.com

CONSULTANTS:

MARK	DATE	DESCRIPTION

STATE OF NEW YORK · JOHN R. COLLINS · NO. 086205 · LICENSED PROFESSIONAL ENGINEER

"ALTERATION OF THIS DOCUMENT EXCEPT BY A LICENSED PROFESSIONAL IS ILLEGAL"

DESIGNED BY:	DRAWN BY:	CHECKED BY:	REVIEWED BY:
SLM	ACP		
PROJECT No: RDWD1904	DATE: SEPTEMBER 2019		SCALE: AS SHOWN

CLIENT
Riverhead Water District

Rehabilitation of Plant No. 4

TOWN OF RIVERHEAD · PAX ET PROSPERITAS · PER PROGRESSUM · 1792

1124 Osborn Avenue
Riverhead, NY 11901

Dist:600 Sect:101 Block:03 Lot:001

CONTRACT
CONTRACT M
LIME SYSTEM REPLACEMENT

STATUS
FINAL BID DOCUMENT

SHEET TITLE
WELL HOUSE NO. 4 REMOVALS PLAN

DRAWING No.
M1.0

SHEET No. 03 OF 16

C:\Users\smirna\Documents\RDWD1904_Central\9_M_v2.0_smirna.rvt

9/11/2019 9:51:35 AM

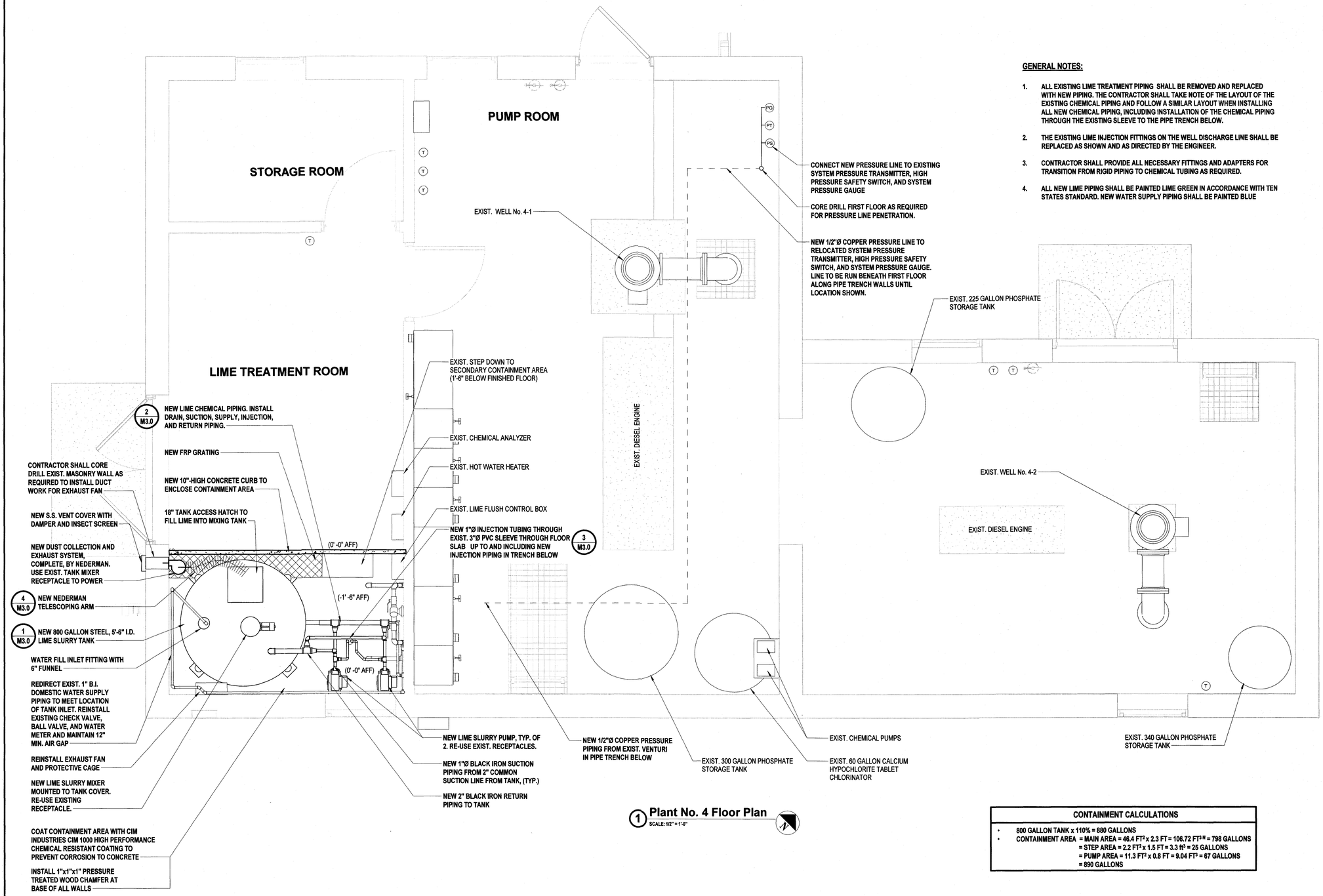

1 **Plant No. 4 Floor Plan**
SCALE: 1/2" = 1'-0"

GENERAL NOTES:

1. ALL EXISTING LIME TREATMENT PIPING SHALL BE REMOVED AND REPLACED WITH NEW PIPING. THE CONTRACTOR SHALL TAKE NOTE OF THE LAYOUT OF THE EXISTING CHEMICAL PIPING AND FOLLOW A SIMILAR LAYOUT WHEN INSTALLING ALL NEW CHEMICAL PIPING, INCLUDING INSTALLATION OF THE CHEMICAL PIPING THROUGH THE EXISTING SLEEVE TO THE PIPE TRENCH BELOW.
2. THE EXISTING LIME INJECTION FITTINGS ON THE WELL DISCHARGE LINE SHALL BE REPLACED AS SHOWN AND AS DIRECTED BY THE ENGINEER.
3. CONTRACTOR SHALL PROVIDE ALL NECESSARY FITTINGS AND ADAPTERS FOR TRANSITION FROM RIGID PIPING TO CHEMICAL TUBING AS REQUIRED.
4. ALL NEW LIME PIPING SHALL BE PAINTED LIME GREEN IN ACCORDANCE WITH TEN STATES STANDARD. NEW WATER SUPPLY PIPING SHALL BE PAINTED BLUE

CONTAINMENT CALCULATIONS
• 800 GALLON TANK x 110% = 880 GALLONS
• CONTAINMENT AREA = MAIN AREA = 46.4 FT^2 x 2.3 FT = 106.72 FT^3 = 798 GALLONS = STEP AREA = 2.2 FT^2 x 1.5 FT = 3.3 ft^3 = 25 GALLONS = PUMP AREA = 11.3 FT^2 x 0.8 FT = 9.04 FT^3 = 67 GALLONS = 890 GALLONS

RIVERHEAD WATER DISTRICT PLANT NO.4 - LIST OF EQUIPMENT, MANUFACTURER'S MAKE AND MODEL NUMBER		
#	ITEM OF EQUIPMENT	MANUFACTURER'S MAKE AND MODEL NUMBER
1	800-GALLON STEEL LIME STORAGE TANK	HIGHLAND TANK (CUSTOM TANK)
2	CHEMICAL METERING PUMPS (LIME SLURRY PUMP)	JESCO AMERICA CORPORATION, MODEL 1730
3	TANK MIXER	SPX CORPORATION, LIGHTNIN BRAND, MODEL EV6950M
4	DUST COLLECTION AND EXHAUST SYSTEM	NEDERMAN 10-FT ARM, FAN: N-SERIES MODEL N-16
5	BALL VALVES	CONBRACO INDUSTRIES, INC. APOLLO VALVE, MODEL 76F-100-A SERIES
6	PRESSURE RELIEF/BACKPRESSURE VALVES	PLAST-O-MATIC, MODEL TRVDT100T-TF

MECHANICAL NOTES:

1. THE CONTRACTOR SHALL SUPPORT AND ANCHOR ALL EXPOSED PIPING IN ACCORDANCE WITH THE SPECIFICATIONS. WHERE METHODS OF SUPPORT ARE SHOWN, SUCH METHODS SHALL BE CONSIDERED AS SUGGESTED. SUCH SUGGESTED METHODS SHALL NOT RELIEVE THE CONTRACTOR FROM INSTALLING ALL PIPING IN ACCORDANCE WITH SPECIFIED REQUIREMENTS.
2. MECHANICAL IDENTIFICATION SHALL BE FURNISHED AND INSTALLED IN ACCORDANCE WITH THE SPECIFICATIONS. VALVE DESIGNATIONS AND EQUIPMENT NAMES SHALL BE AS SHOWN ON MECHANICAL DRAWINGS.
3. CORE DRILL FLOORS AND WALLS TO INSTALL SMALL PIPING AND DUCT WORK FOR EXHAUST SYSTEM AS REQUIRED. UNLESS SPECIFICALLY DIMENSIONED ON THE DRAWINGS, VERIFY LOCATIONS OF CORE DRILLING WITH ENGINEER PRIOR TO DRILLING.
4. SINGLE LINE REPRESENTATIONS OF SMALL PIPING ARE DIAGRAMMATIC AND ARE NOT SHOWN TO SCALE.
5. ALL MECHANICAL EQUIPMENT, LARGE AND SMALL PIPING, VALVES AND APPURTENANCES CALLED OUT OR SHOWN ON MECHANICAL DRAWINGS ARE TO BE FURNISHED AND INSTALLED NEW BY THE CONTRACTOR, UNLESS OTHERWISE NOTED.
6. CONTRACTOR SHALL FURNISH AND INSTALL NEW SPOOL PIECES AND SPACERS, WITH LENGTHS AND DIMENSIONS AS REQUIRED, TO COMPLETE PIPING SYSTEMS SHOWN ON MECHANICAL DRAWINGS.
7. ALL NEW PIPING SHALL BE PREPARED, PRIMED AND PAINTED IN ACCORDANCE WITH THE SPECIFICATIONS. ALL COLORS SHALL BE AS APPROVED BY THE OWNER/ENGINEER.

H2M architects + engineers
538 Broad Hollow Road, 4th Floor East
Melville, NY 11747
631.756.8000 • www.h2m.com

CONSULTANTS:

MARK	DATE	DESCRIPTION

STATE OF NEW YORK · JOHN R. COLLINS · NO. 086035 · LICENSED PROFESSIONAL ENGINEER

"ALTERATION OF THIS DOCUMENT EXCEPT BY A LICENSED PROFESSIONAL IS ILLEGAL"

DESIGNED BY:	DRAWN BY:	CHECKED BY:	REVIEWED BY:
SLM	ACP		
PROJECT No: RDWD1904	DATE: SEPTEMBER 2019		SCALE: AS SHOWN

CLIENT
Riverhead Water District

Rehabilitation of Plant No. 4

TOWN OF RIVERHEAD · PAX ET PROSPERITAS · PER PROGRESSUM · 1792

1124 Osborn Avenue
Riverhead, NY 11901

Dist:600 Sect:101 Block:03 Lot:001

CONTRACT
CONTRACT M
LIME SYSTEM REPLACEMENT

STATUS
FINAL BID DOCUMENT

SHEET TITLE
WELL HOUSE NO. 4
PROPOSED FLOOR PLAN

DRAWING No. **M2.0**

SHEET No. 04 OF 16

C:\Users\smine\Documents\RDWD1904_Central19_M_V2.0_smirna.rvt

9/11/2019 8:51:37 AM

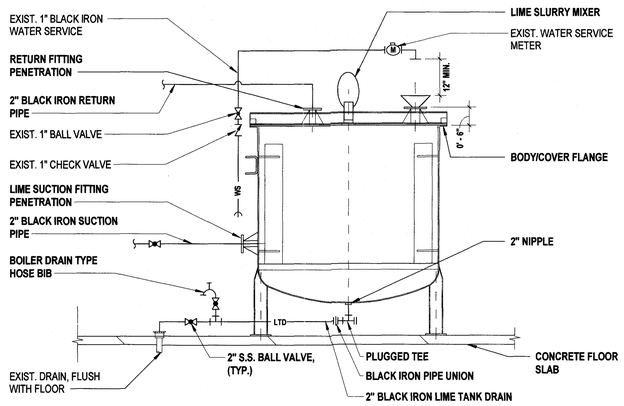

SIDE ELEVATION VIEW

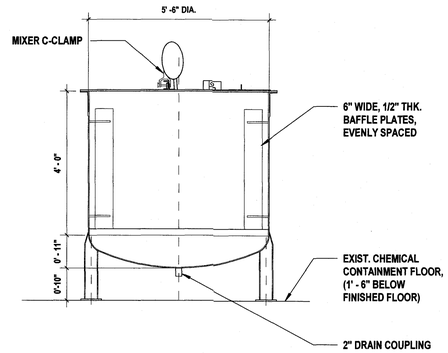

FRONT ELEVATION VIEW

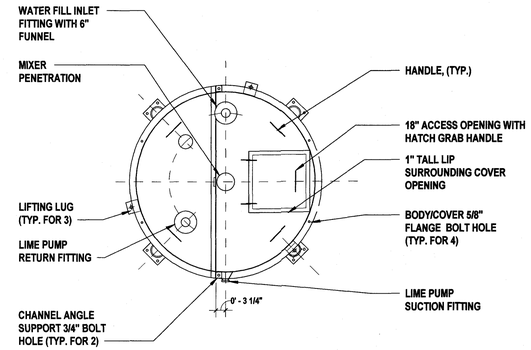

TOP VIEW

NOTES:

1. EXISTING WATER METER SHALL BE REMOVED AND REINSTALLED TO FACILITATE INSTALLATION OF NEW STORAGE TANK AND PROVIDE 12" MIN. AIR GAP.
2. CONTRACTOR SHALL INSTALL PIPE SUPPORTS FOR WATER SERVICE AND ALL NEW PIPING AS SPECIFIED.
3. ALL PIPE FITTINGS AND ACCESSORIES SHALL MATCH PIPE SIZE.
4. CONTRACTOR IS REQUIRED TO LOCATE AND SIZE ALL MOUNTING HOLES FOR LIME EQUIPMENT, LIME PUMP SUCTION LINES, RETURN LINES, AND WATER INLET LINE.
5. BOTTOM IMPELLER OF MIXER SHALL BE MOUNTED 3" FROM TANK BOTTOM.
6. PROVIDE INSECT SCREENING AT FILL LINE AND MIXER OPENING.

1 Lime Slurry Tank

SCALE: NTS

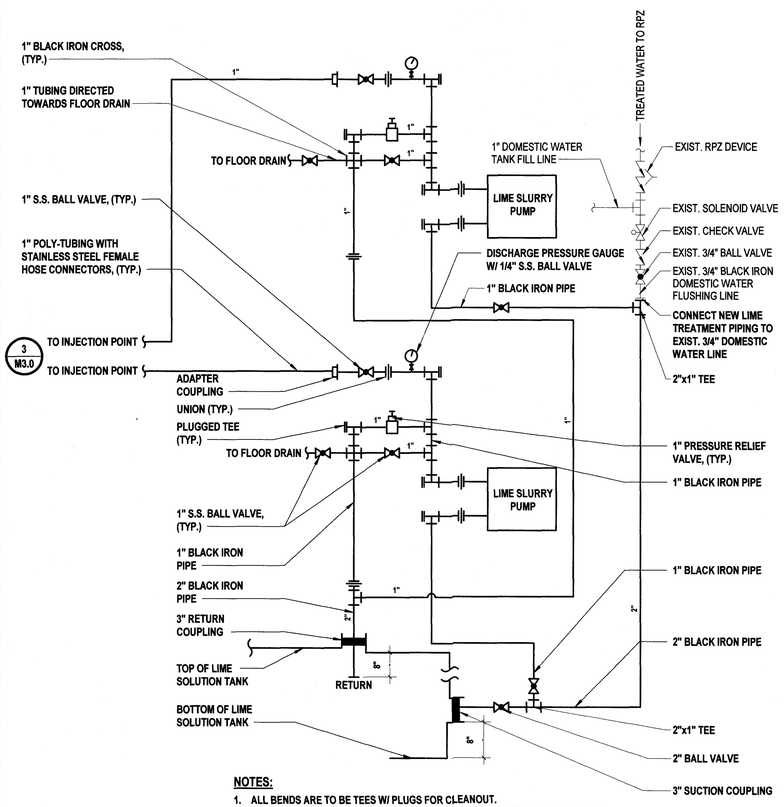

NOTES:

1. ALL BENDS ARE TO BE TEES W/ PLUGS FOR CLEANOUT.
2. PROVIDE PIPING SUPPORTS FROM CEILING/WALLS/TANK WITH STAINLESS STEEL HARDWARE AS REQUIRED.
3. ALL BLACK IRON PIPE SHALL BE SCH. 40 W/ THREADED ENDS.
4. PRESSURE RELIEF VALVE SHALL BE SET IN FIELD BASED ON FIELD CONDITIONS.
5. ALL LIME TREATMENT PIPING SHALL BE PAINTED LIGHT GREEN AND FLOW DIRECTION SHALL BE LABELED.
6. CONTRACTOR SHALL PROVIDE ALL NECESSARY FITTINGS AND ADAPTERS FROM RIGID PIPING TO CHEMICAL TUBING AS REQUIRED.

2 Lime Slurry Discharge Piping Schematic

SCALE: NTS

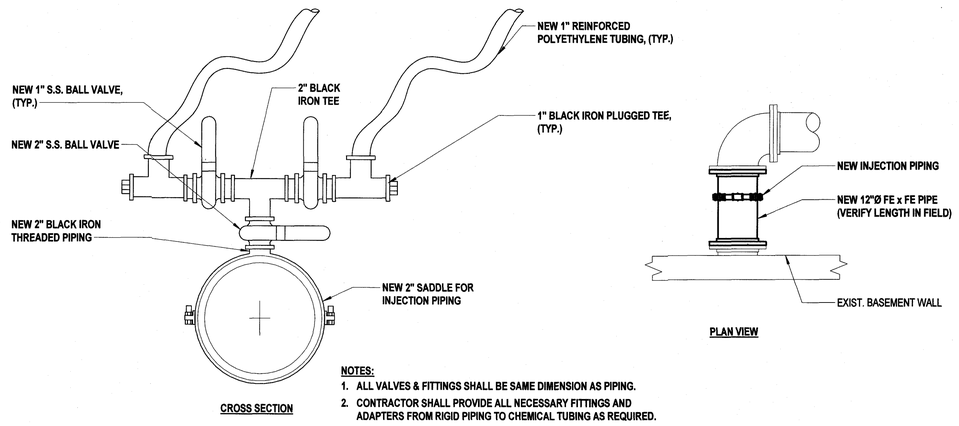

CROSS SECTION

PLAN VIEW

NOTES:

1. ALL VALVES & FITTINGS SHALL BE SAME DIMENSION AS PIPING.
2. CONTRACTOR SHALL PROVIDE ALL NECESSARY FITTINGS AND ADAPTERS FROM RIGID PIPING TO CHEMICAL TUBING AS REQUIRED.

3 Lime Injection Tubing

SCALE: NTS

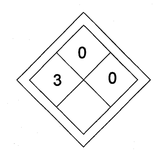

NOTE:

1. INSTALL SIGNAGE AS DIRECTED BY THE ENGINEER AND IN ACCORDANCE WITH NYSDEC AND SCDHS REGULATIONS.
2. PROVIDE EIGHT RIGHT-TO-KNOW SIGNS AT ALL ENTRANCES TO THE BUILDING AND THE LIME ROOM, ON THE TANK, AT THE TREATMENT PUMP, AND AT THE INJECTION POINT.
3. PROVIDE TWO (2) HAZARDOUS MATERIAL SIGNS. INSTALL ON THE TANK AND AT THE TREATMENT PUMP.

5 Lime (Calcium Hydroxide) Signage

SCALE: NTS

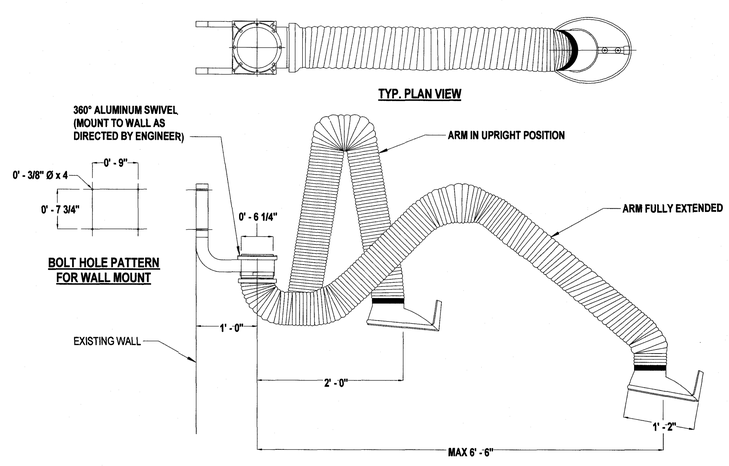

ELEVATION VIEW

4 Nederman Telescoping Arm

SCALE: NTS

H2M architects + engineers

538 Broad Hollow Road, 4th Floor East
Melville, NY 11747
631.756.8000 • www.h2m.com

CONSULTANTS:

MARK	DATE	DESCRIPTION

"ALTERATION OF THIS DOCUMENT EXCEPT BY A LICENSED PROFESSIONAL IS ILLEGAL"

DESIGNED BY:	DRAWN BY:	CHECKED BY:	REVIEWED BY:
SLM	ACP		
PROJECT No: RDWD1904	DATE: SEPTEMBER 2019		SCALE: AS SHOWN

CLIENT

Riverhead Water District

Rehabilitation of Plant No. 4

1124 Osborn Avenue
Riverhead, NY 11901

Dist:600 Sect:101 Block:03 Lot:001

CONTRACT

CONTRACT M LIME SYSTEM REPLACEMENT

STATUS

FINAL BID DOCUMENT

SHEET TITLE

LIME TANK AND DETAILS

DRAWING No. **M3.0**

SHEET No. 05 OF 16

C:\Users\smirna\Documents\RDWD1904_Central19_M_v2.0_smirna.rvt

9/11/2019 9:51:40 AM

ELECTRICAL LEGEND

SYMBOL	DESCRIPTION	COMMENTS
S_3	THREE - WAY SWITCH	46" AFF TO CL UON
S_4	FOUR - WAY SWITCH	46" AFF TO CL UON
S_I	ILLUMINATED SWITCH	46" AFF TO CL UON
S^A	SINGLE POLE SWITCH; "A" INDICATES SWITCH CONTROL	46" AFF TO CL UON
S_D	SINGLE POLE DIMMER SWITCH	46" AFF TO CL UON
S_{3D}	THREE - WAY DIMMER SWITCH	46" AFF TO CL UON
S_K	SINGLE POLE KEYED SWITCH	46" AFF TO CL UON
S_{K3}	KEYED THREE - WAY SWITCH	46" AFF TO CL UON
S_{K4}	KEYED FOUR - WAY SWITCH	46" AFF TO CL UON
S_M	HORSEPOWER RATED SWITCH, WITH INDICATOR (CONTRACTOR SHALL COORDINATE VOLTAGE AND PHASE WITH EQUIPMENT)	46" AFF
S_P	SWITCH AND PILOT LIGHT	
S_T	SWITCH WITH THERMAL OVERLOAD PROTECTION (CONTRACTOR SHALL COORDINATE VOLTAGE AND PHASE WITH EQUIPMENT)	
S_{OS}	OCCUPANY SENSOR WITH MANUAL OVERRIDE, WALL MOUNT	
TC	TIME CLOCK	
PC	PHOTOCELL	
PB	PUSH BUTTON	
E,G	EMERGENCY SHUT OFF SWITCH; 'E' INDICATES ELECTRICAL; 'G' INDICATES GAS	
OS	OCCUPANCY SENSOR, CEILING MOUNT	
	OCCUPANCY SENSOR POWER PACK, MOUNTED ABOVE CEILING	
	2 #12 AWG + #12 AWG GND IN 3/4" E.C. CONCEALED IN WALL OR CEILING	
	5 #12 AWG + #12 AWG GND IN 3/4" E.C. CONCEALED IN WALL OR CEILING	
	3 #12 AWG + #12 AWG GND IN 3/4" E.C. CONCEALED IN OR BELOW SLAB	
LP1-35	DEDICATED HOME RUN TO PANEL LP1 FOR CIRCUIT No. 35 ONLY. 2 #12 AWG + #12 AWG GND IN 3/4" E.C. CONCEALED IN WALL OR CEILING	
	SIMPLEX RECEPTACLE: 120V, 20A. COORDINATE MOUNTING HEIGHT WITH MECHANICAL CONTRACTOR TO CLEAR BASEBOARDS.	FLUSH
	DUPLEX RECEPTACLE: 120V, 20A. COORDINATE MOUNTING HEIGHT WITH MECHANICAL CONTRACTOR TO CLEAR BASEBOARDS.	FLUSH
	QUAD RECEPTACLE, DOUBLE DUPLEX RECEPTACLE: 120V, 20A. COORDINATE MOUNTING HEIGHT WITH MECHANICAL CONTRACTOR TO CLEAR BASEBOARDS.	FLUSH
C	DUPLEX RECEPTACLE: 120V, 20A; SUBSCRIPT "C" INDICATES CEILING MOUNT.	FLUSH
	DUPLEX RECEPTACLE: 120V, 20A; FLOOR MOUNTED.	FLUSH
IG	ISOLATED GROUND DUPLEX RECEPTACLE. COORDINATE MOUNTING HEIGHT WITH MECHANICAL CONTRACTOR TO CLEAR BASEBOARDS.	FLUSH
GFI	DUPLEX RECEPTACLE: 120V, 20A; WITH GROUND FAULT INDICATOR. COORDINATE MOUNTING HEIGHT WITH MECHANICAL CONTRACTOR TO CLEAR BASEBOARDS.	FLUSH
UC	DUPLEX RECEPTACLE: 120V, 20A; SUBSCRIPT "UC" INDICATES UNDER COUNTER	AS PER ENGINEER
CT	DUPLEX RECEPTACLE: 120V, 20A; SUBSCRIPT "CT" INDICATES COUNTER TOP.	AS PER ENGINEER
WP	DUPLEX RECEPTACLE: 120V, 20A; SUBSCRIPT "WP" INDICATED WEATHER PROOF	AS PER ENGINEER
40 240	SPECIAL PURPOSE OUTLET: 240V, 40A. VERIFY NEMA CONFIGURATION WITH EQUIPMENT MANUFACTURER.	AS PER ENGINEER
TL	TWISTED LOCK RECEPTACLE: 125V, 20A, 3 WIRE; UNLESS OTHERWISE NOTED.	AS PER ENGINEER
	SURFACE RACEWAY WITH 2 GROUNDED AND ISOLATED TYPE DUPLEX RECEPTACLES AND 1 DATA OUTLET PER POSITION, 18" AFF UNLESS OTHERWISE NOTED.	
	TELEPHONE/POWER POLE	
S1	MAGNETIC STARTER "S1"; SEE STARTER SCHEDULE	
DS1	DISCONNECTION SWITCH "DS1"; SEE DISCONNECT SWITCH SCHEDULE.	
J	JUNCTION BOX	
4X	NEMA 4X STAINLESS STEEL JUNCTION BOX WITH GASKET COVER.	
S	JUNCTION BOX RECESSED IN WALL WITH BLANK COVER, PROVIDE 3/4" E.C. AND DRAG LINE TO ABOVE FINISHED CEILING. MOUNT 18" AFF, UNLESS OTHERWISE NOTED.	
M	FOR MONITOR, JUNCTION BOX RECESSED IN WALL WITH BLANK COVER. PROVIDE 3/4" E.C. AND DRAG LINE TO ABOVE FINISHED CEILING.	
T T1	TRANSFORMER "T1"; SEE TRANSFORMER SCHEDULE.	
	ELECTRICAL PANEL "P1", RECESSED; SEE PANEL SCHEDULE.	
P1	ELECTRICAL PANEL "P1", SURFACE MOUNT; SEE PANEL SCHEDULE.	
	CONDUIT GOING UP.	
	CONDUIT GOING DOWN.	
	PULLBOX	
T	TELEPHONE. PROVIDE 3/4" E.C. WITH DRAG LINE TO AFC AND EMPTY J. BOX RECESSED IN WALL WITH BLANK COVER.	
TV	CABLE TELEVISION. PROVIDE 3/4" E.C. WITH DRAG LINE TO AFC AND EMPTY J. BOX RECESSED IN WALL WITH BLANK COVER.	
D	DATA. PROVIDE 3/4" E.C. WITH DRAG LINE TO AFC AND EMPTY J. BOX RECESSED IN WALL WITH BLANK COVER.	
D/T	COMBINED DATA AND TV. PROVIDE 3/4" E.C. WITH DRAG LINE TO AFC AND EMPTY J. BOX RECESSED IN WALL WITH BLANK COVER.	
S	SECURITY CAMERA. PROVIDE 3/4" E.C. WITH DRAG LINE TO AFC AND EMPTY J. BOX RECESSED IN WALL WITH BLANK COVER.	

ABBREVIATION	DESCRIPTION
AFF	ABOVE FINISH FLOOR
AFC	ABOVE FINISH CEILING
AFG	ABOVE FINISH GRADE
AMP, A	AMPERE
ATS	AUTOMATIC TRANSFER SWITCH; SEE TRANSFER SWITCH SCHEDULE
AWG	AMERICAN WIRE GUAGE
BFC	BELOW FINISHED CEILING
CL	CENTERLINE
CT	COUNTERTOP
EC	ELECTRICAL CONDUIT
GFCI	GROUND FAULT CIRCUIT INTERRUPTER
GFI	GROUND FAULT INDICATOR
PSEG	PUBLIC SERVICE ELECTRIC AND GAS COMPANY (LOCAL ELECTRIC UTILITY)
MCB	MAIN CIRCUIT BREAKER
MLO	MAIN LUGS ONLY
NTS	NOT TO SCALE
UON	UNLESS OTHERWISE NOTED
UC	UNDERCOUNTER
V	VOLTS
VAC	VOLTS ALTERNATING CURRENT
VDC	VOLT DIRECT CURRENT
X-FMR	TRANSFORMER
WP	WEATHERPROOF

SYMBOL	DESCRIPTION	COMMENTS
T	LINE VOLTAGE THERMOSTAT, 120V, 10A.	
	CIRCUIT BREAKER WITH TRIP AND POLES AS NOTED.	
TS1	TRANSFER SWITCH TS1; SEE TRANSFER SWITCH SCHEDULE.	
M.C.B 100A/3P PANEL "P1"	DISTRIBUTION PANEL P1 WITH 30A, 2 POLE M.C.B.; SEE DISTRIBUTION PANEL SCHEDULE.	
	DISCONNECT SWITCH DS1, 100A, 3 POLES; SEE DISCONNECT SWITCH SCHEDULE.	
DS3 100A/3P	FUSED DISCONNECT SWITCH DS2, FUSED AT 40A, 3 POLES; SEE DISCONNECT SWITCH SCHEDULE.	
G1	GENERATOR SET G1	
M	ELECTRIC METER AND METER PAN AS PER PSEG REQUIREMENTS.	
5	MOTOR, NUMBER INDICATED HORSEPOWER.	
	CURRENT TRANSFORMER.	
PTS	VOLTAGE TRANSFORMER.	
T2	TRANSFORMER WITH SIZE, PRIMARY AND SECONDARY VOLTAGES AS NOTED.	
RVRM 10	REDUCED VOLTAGE SOLID STATE RAMPING MODULE, SIZED FOR 10 H.P.	
RVSS 150	REDUCED VOLTAGE SOLID STATE STARTER, SIZED FOR 150 H.P.	
VFD 25	VARIABLE FREQUENCY DRIVE, RATED FOR 25 H.P.	
FVNR 5	FULL VOLTAGE NON-REVERSING STARTER, NEMA SIZE 6	
FVR 5	FULL VOLTAGE REVERSING STARTER, NEMA SIZE 5	
JJS	FAST ACTING SOLID STATE FUSES AS PER MANUFACTURER.	
	MULTIPLE BRANCH CIRCUITS AS REQUIRED.	
	CONTROL CIRCUIT; MIN 2 #12 AWG IN 3/4" E.C.	

CONTROLS LEGEND

SYMBOL	DESCRIPTION	COMMENTS
	PUMP OR BLOWER MOTOR	
	FLOR METER	
M	MOTOR CONTROLLED VALVE WITH LIMIT SWITCHES	
LS	LIMIT SWITCH	
FT	FLOW TRANSMITTER	
FS	FLOW SWITCH	
PT	PRESSURE TRANSMITTER	
PS	PRESSURE SWITCH	
LT	LEVEL TRANSMITTER	
LE	LEVEL ELECTRODES	
DP	DIFFERENTIAL PRESSURE TRANSMITTER	
	SOLENOID VALVE	
	PITOT TUBE AND AIR PRESSURE SWITCH	
TLDS	PITOT TUBE AND AIR PRESSURE SWITCH	
PID	PROPORTIONAL - INTEGRAL - DERIVATIVE SINGLE LOOP CONTROLLER	
SC TP—A	SINGLE CONDITIONER TIME PULSE DURATION TO ANALOG	

ELECTRICAL SHEET LIST

E0.0	ELECTRICAL LEGENDS
E1.0	WELL HOUSE NO. 4 ELECTRICAL REMOVALS PLAN
E2.0	WELL HOUSE NO. 4 POWER PLAN
E3.0	WELL HOUSE NO. 4 ROOF POWER PLAN
E4.0	ELECTRICAL SINGLE LINE DIAGRAM
E5.0	ELECTRICAL MCC ELEVATION PLAN
E6.0	ELECTRICAL SCHEDULES
E7.0	ELECTRICAL DETAILS
EI0.0	INSTRUMENTATION AND CONTROL LEGENDS
EI1.0	INSTRUMENTATION AND CONTROL PLAN
EI2.0	INSTRUMENTATION AND CONTROL DETAILS AND DIAGRAMS

H2M architects + engineers

538 Broad Hollow Road, 4th Floor East
Melville, NY 11747
631.756.8000 • www.h2m.com

CONSULTANTS:

MARK	DATE	DESCRIPTION

STATE OF NEW YORK · CHARLES J. STAUFF · 095857 · LICENSED PROFESSIONAL ENGINEER

"ALTERATION OF THIS DOCUMENT EXCEPT BY A LICENSED PROFESSIONAL IS ILLEGAL"

DESIGNED BY:	DRAWN BY:	CHECKED BY:	REVIEWED BY:
CJS	FI		

PROJECT No:	DATE:	SCALE:
RDWD1904	SEPTEMBER 2019	AS SHOWN

CLIENT

Riverhead Water District

Rehabilitation of Plant No. 4

TOWN OF RIVERHEAD · 1792 · PAX ET PROSPERITAS · PER PROGRESSUM

1124 Osborn Avenue
Riverhead, NY 11901

Dist:600 Sect:101 Block:03 Lot:001

CONTRACT

CONTRACT E
ELECTRICAL UPGRADES

STATUS

FINAL BID DOCUMENT

SHEET TITLE

ELECTRICAL LEGENDS

DRAWING No. E0.0

SHEET No. 06 OF 16

C:\Users\cdelgatto\Documents\RDWD1904_Central19_M_v2.0_cdelgatto.rvt

9/10/2019 3:16:34 PM

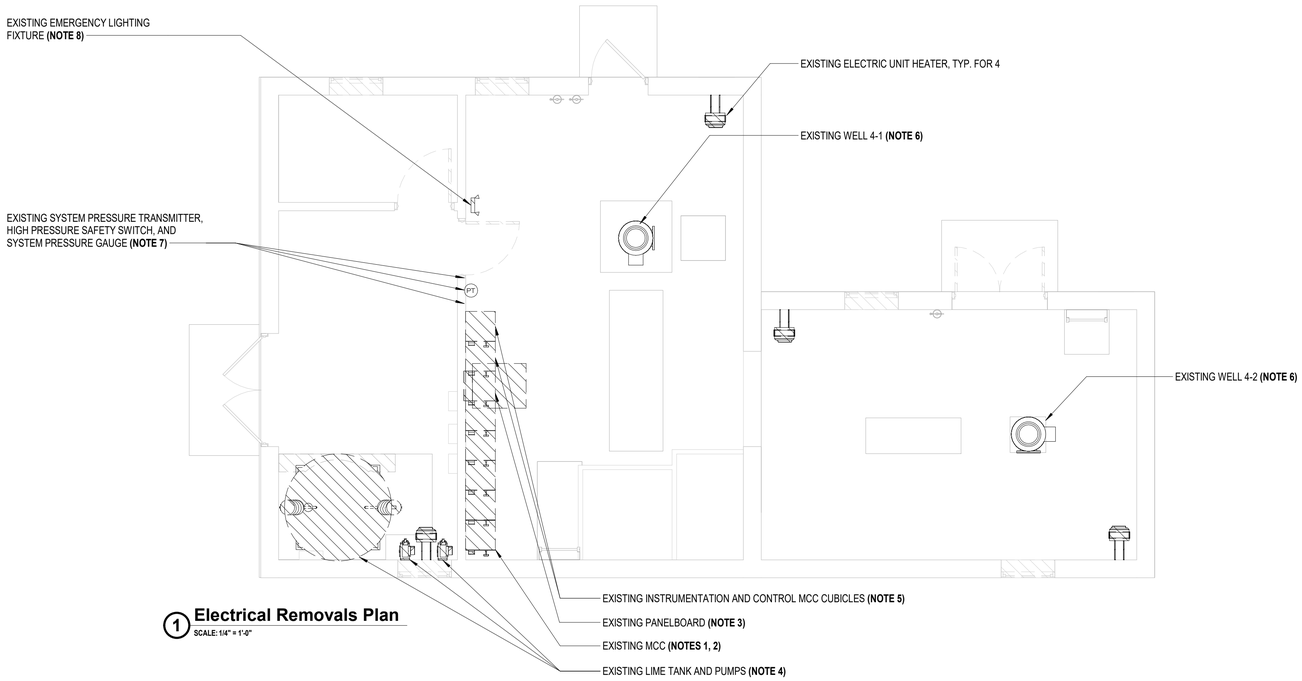

1 **Electrical Removals Plan**
SCALE: 1/4" = 1'-0"

DEMOLITION GENERAL NOTES:

G1. REMOVE AND DISPOSE OF INCLUDES REMOVAL OF ITEM IDENTIFIED INCLUDING ALL CONDUITS,WIRES, AND CABLES, BACK TO SOURCE UNLESS OTHERWISE NOTED.

G2. CONTRACTOR SHALL BE REQUIRED TO MAINTAIN CIRCUIT CONTINUITY FOR ALL EXISTING DEVICES ON A CIRCUIT WHEN THE DRAWINGS CALL FOR REMOVAL AND/OR DISPOSAL OF A DEVICE ON THAT CIRCUIT.

G3. ALL CONDUITS SPECIFIED TO BE REMOVED SHALL BE CUT FLUSH WITH THE SURFACE AND SURFACE SHALL BE PATCHED UNLESS OTHERWISE NOTED. SURFACE SHALL BE PRIMED AND PAINTED TO MATCH EXISTING.

DEMOLITION KEY NOTES:

1. REMOVE AND DISPOSE OF EXISTING MAIN ELECTRICAL SERVICE ENTRANCE EQUIPMENT IN ENTIRETY INCLUDING BUT NOT LIMITED TO CT CABINET, UTILITY METER, MAIN SERVICE CIRCUIT BREAKER, ALL ASSOCIATED CONDUITS AND WIRES BACK TO SOURCE.
2. REMOVE AND DISPOSE OF EXISTING MOTOR CONTROL CENTER IN ITS ENTIRETY INCLUDING BUT NOT LIMITED TO WELL PUMP MOTOR STARTERS, CIRCUIT BREAKERS, TRANSFORMERS, AIR COMPRESSOR MOTOR STARTER, LIME PUMP, AND MISC. MOTOR STARTERS, ETC. ALL ASSOCIATED CONDUIT AND WIRE SHALL BE REMOVED AND DISPOSED OF BACK TO SOURCE, U.O.N.
3. REMOVE AND DISPOSE OF EXISTING DISTRIBUTION PANEL IN ITS ENTIRETY. RE-FEED EXISTING CIRCUITS NOT IDENTIFIED TO BE REMOVED FROM EXISTING DISTRIBUTION PANEL FROM NEW DISTRIBUTION PANEL 'P2'.
4. EQUIPMENT IDENTIFIED TO BE REMOVED BY CONTRACT 'M'. CONTRACT 'E' SHALL REMOVE AND DISPOSE OF ALL ASSOCIATED ELECTRICAL EQUIPMENT INCLUDING BUT NOT LIMITED TO DISCONNECT SWITCHES, MOTOR STARTERS, CONDUITS AND WIRES BACK TO SOURCE.
5. REMOVE AND DISPOSE OF EXISTING MCC INSTRUMENTATION AND CONTROL EQUIPMENT CUBICLES IN THEIR ENTIRETY, U.O.N. EXISTING CHART RECORDERS, TIMERS, PLC, AND ALL ASSOCIATED EQUIPMENT AND ACCESSORIES SHALL BE TURNED OVER TO OWNER. EXISTING TELEMETRY EQUIPMENT (MODEM, VPN, ETC.) SHALL REMAIN AND BE RE-USED FOR COMMUNICATION OF NEW CONTROL PANEL WITH EXISTING ADMINISTRATION BUILDING/SCADA SYSTEM. ALL PLC INPUT/OUTPUT (I/O) WIRING SHALL BE LABELED AND DISCONNECTED PRIOR TO DEMOLITION OF CUBICLES FOR EXTENSION TO NEW PLC IN CP-1 REFER TO DRAWING EI1.0 AND SPECIFICATION 265011 FOR ADDITIONAL DETAIL.
6. EXISTING WELL PUMP FEEDERS TO BE REMOVED AND DISPOSED OF BACK TO SOURCE. EXISTING CONDUIT TO REMAIN FOR REUSE. EXISTING FLEXIBLE LIQUIDTIGHT METALLIC CONDUIT SHALL BE REPLACED IN ITS ENTIRETY. REFER TO DRAWING E3.0 FOR ADDITIONAL DETAIL.
7. RELOCATE EXISTING SYSTEM PRESSURE TRANSMITTER, HIGH PRESSURE SAFETY SWITCH, AND SYSTEM PRESSURE GAUGE TO NEW LOCATION SHOWN ON EI1.0 TO ALLOW FOR INSTALATION OF NEW MCC. REROUTE ALL ASSOCIATED PRESSURE PIPING AS REQUIRED TO TERMINATE AT NEW DEVICE LOCATION. REFER TO DRAWING M2.0 FOR ADDITIONAL DETAIL.
8. RELOCATE EXISTING WALL MOUNTED EMERGENCY LIGHTING FIXTURE AS REQURIED TO ACCOMMODATE NEW CONSTRUCTION. REROUTE AND EXTEND ASSOCIATED WIRING AND CONDUIT/RACEWAY AS REQUIRED.

H2M architects + engineers
538 Broad Hollow Road, 4th Floor East
Melville, NY 11747
631.756.8000 • www.h2m.com

CONSULTANTS:

MARK	DATE	DESCRIPTION

STATE OF NEW YORK · CHARLES J. STARKE · 090837 · LICENSED PROFESSIONAL ENGINEER

"ALTERATION OF THIS DOCUMENT EXCEPT BY A LICENSED PROFESSIONAL IS ILLEGAL"

DESIGNED BY:	DRAWN BY:	CHECKED BY:	REVIEWED BY:
CJS	FI		

PROJECT No:	DATE:	SCALE:
RDWD1904	SEPTEMBER 2019	AS SHOWN

CLIENT
Riverhead Water District

Rehabilitation of Plant No. 4

1124 Osborn Avenue
Riverhead, NY 11901

Dist:600 Sect:101 Block:03 Lot:001

CONTRACT
CONTRACT E ELECTRICAL UPGRADES

STATUS
FINAL BID DOCUMENT

SHEET TITLE
WELL HOUSE NO. 4 ELECTRICAL REMOVALS PLAN

DRAWING No. **E1.0**

SHEET No. 07 OF 16

C:\Users\cdelgatto\Documents\RDWD1904_Central19_M_v2.0_cdelgatto.rvt

9/11/2019 10:19:10 AM

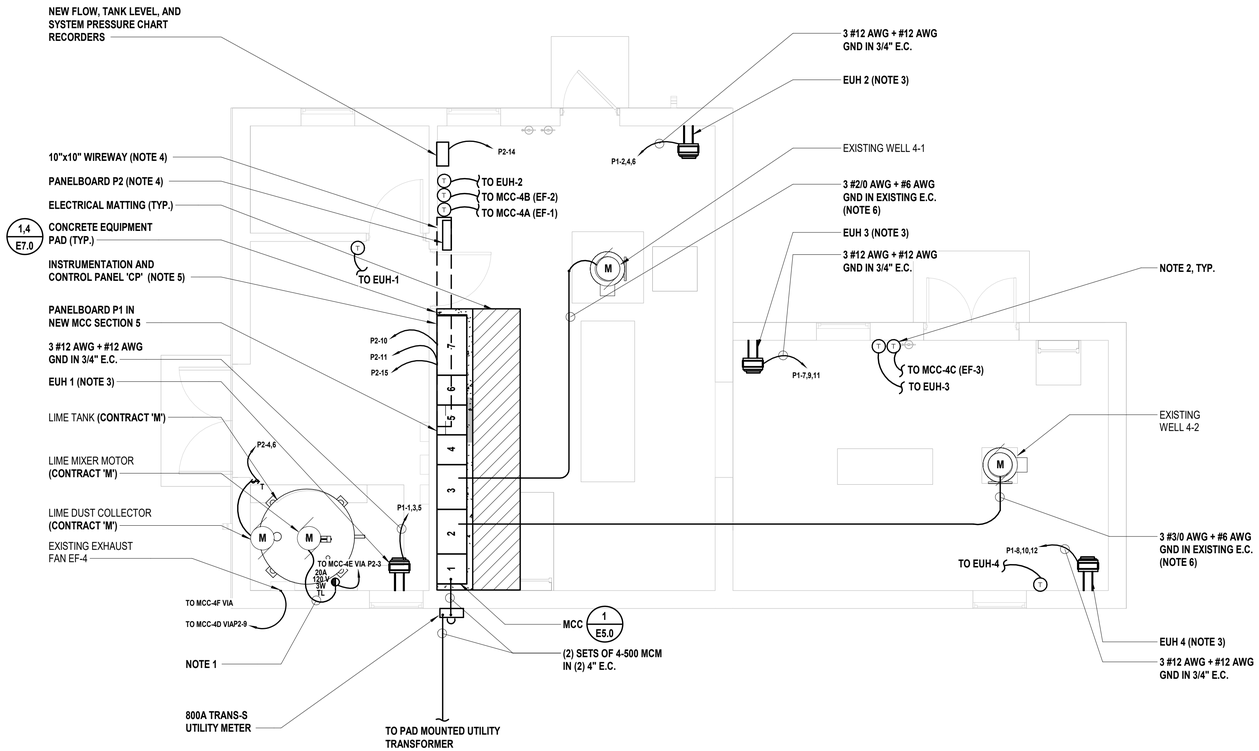

1 ELECTRICAL POWER PLAN

SCALE: 1/4" = 1'-0"

NOTES:

1. PROVIDE AND INSTALL S.O. CORD WITH MATCHING PLUG END. CORD AND PLUG END SHALL BE SIZED IN ACCORDANCE WITH NEC.
2. PROVIDE AND INSTALL INSULATED BACKPLATE FOR ALL THERMOSTATS MOUNTED ON AN EXTERIOR WALL.
3. CONTRACTOR SHALL FIELD INSTALL AND WIRE DISCONNECT SWITCH PROVIDED BY EQUIPMENT MANUFACTURER.
4. 10"X10" WIREWAY FOR ROUTING OF NEW AND EXISTING CIRCUITS FROM NEW MCC TO NEW PANELBOARD 'P2'. COORDINATE EXACT ROUTING IN FIELD TO ACCOMMODATE EXISTING AND NEW CONSTRUCTION. EXTEND ALL EXISTING CIRCUITS (CONDUIT AND WIRE) NOT IDENTIFIED AS BEING REMOVED TO NEW PANELBOARD 'P2' AND RETERMINATE TO NEW CIRCUIT BREAKER.
5. PROVIDE TWO (2) DEDICATED 120V CIRCUITS FROM PANELBOARD 'P2' TO NEW CP.
6. CONTRACTOR SHALL REPLACE EXISTING LIQUIDTIGHT FLEXIBLE METALLIC CONDUIT FROM CONDUIT STUB UP LOCATION AT FLOOR TO TERMINATION BOX AT WELL PUMP MOTOR.

H2M architects + engineers

538 Broad Hollow Road, 4th Floor East
Melville, NY 11747
631.756.8000 • www.h2m.com

CONSULTANTS:

MARK	DATE	DESCRIPTION

"ALTERATION OF THIS DOCUMENT EXCEPT BY A LICENSED PROFESSIONAL IS ILLEGAL."

DESIGNED BY:	DRAWN BY:	CHECKED BY:	REVIEWED BY:
CJS	FI		

PROJECT No:	DATE:	SCALE:
RDWD1904	SEPTEMBER 2019	AS SHOWN

CLIENT

Riverhead Water District

Rehabilitation of Plant No. 4

1124 Osborn Avenue
Riverhead, NY 11901

Dist:600 Sect:101 Block:03 Lot:001

CONTRACT

CONTRACT E ELECTRICAL UPGRADES

STATUS

FINAL BID DOCUMENT

SHEET TITLE

WELL HOUSE NO. 4 POWER PLAN

DRAWING No. **E2.0**

SHEET No. 08 OF 16

C:\Users\cdelgatto\Documents\RDWD1904_Central19_M_v2.0_cdelgatto.rvt

9/10/2019 5:20:26 PM

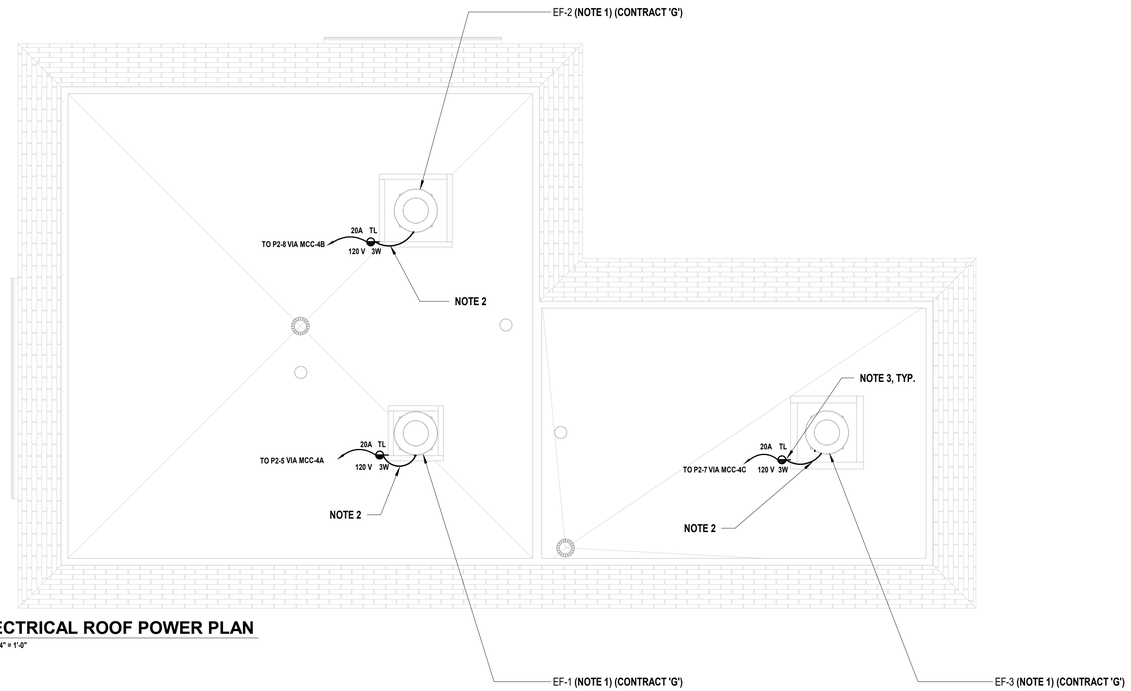

1 **ELECTRICAL ROOF POWER PLAN**
SCALE: 1/4" = 1'-0"

NOTES:

1. CONTRACTOR SHALL FIELD INSTALL AND WIRE DISCONNECT SWITCH PROVIDED BY EQUIPMENT MANUFACTURER.
2. PROVIDE AND INSTALL S.O. CORD WITH MATCHING PLUG END. CORD AND PLUG END SHALL BE SIZED IN ACCORDANCE WITH NEC.
3. ALL ROOF MOUNTED RECEPTACLES SHALL BE PROVIDED WITH WEATHERPROOF IN-USE COVER.

H2M architects + engineers
538 Broad Hollow Road, 4th Floor East
Melville, NY 11747
631.756.8000 • www.h2m.com

CONSULTANTS:

MARK	DATE	DESCRIPTION

STATE OF NEW YORK
CHARLES J. STARKE
LICENSED PROFESSIONAL ENGINEER
090831

"ALTERATION OF THIS DOCUMENT EXCEPT BY A LICENSED PROFESSIONAL IS ILLEGAL."

DESIGNED BY:	DRAWN BY:	CHECKED BY:	REVIEWED BY:
CJS	FI		

PROJECT No:	DATE:	SCALE:
RDWD1904	SEPTEMBER 2019	AS SHOWN

CLIENT
Riverhead Water District

Rehabilitation of Plant No. 4

1124 Osborn Avenue
Riverhead, NY 11901

Dist:600 Sect:101 Block:03 Lot:001

CONTRACT
CONTRACT E ELECTRICAL UPGRADES

STATUS
FINAL BID DOCUMENT

SHEET TITLE
WELL HOUSE NO. 4 ROOF POWER PLAN

DRAWING No.
E3.0

SHEET No.
09 OF 16

C:\Users\cdelgatto\Documents\RDWD1904_Central19_M_v2.0_cdelgatto.rvt
9/10/2019 3:16:35 PM

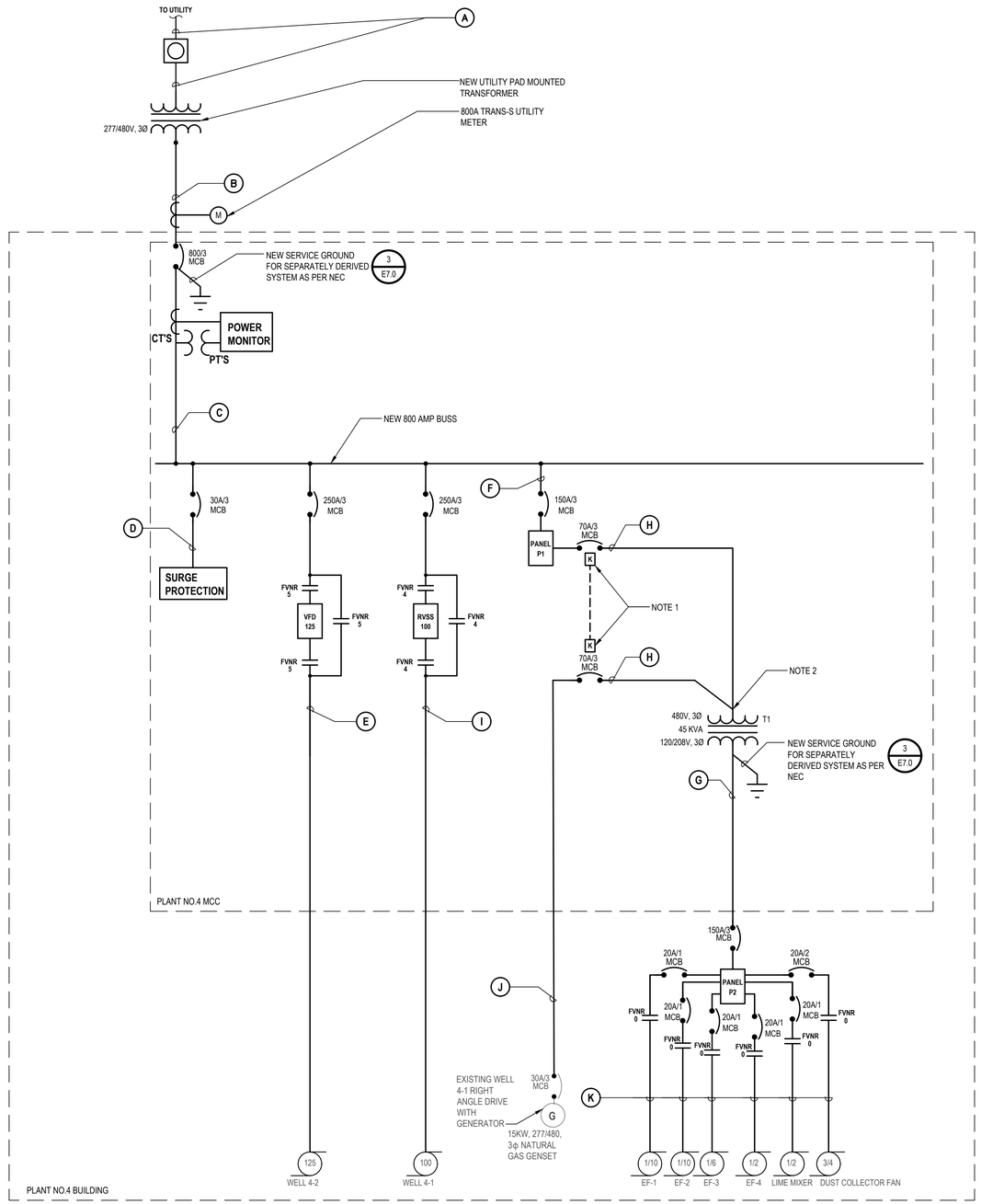

1 Electrical Single Line Diagram

SCALE:NTS

NOTES:

1. KIRK KEYS KEYED ALIKE SO THAT ONLY ONE CIRCUIT BREAKER IS PERMITTED TO CLOSE AT ONE TIME.
2. PROVIDE ADDITIONAL LUGS ON TRANSFORMER AS REQUIRED TO TERMINATE MULTIPLE SETS OF FEEDERS.

FEEDER SCHEDULE

FEEDER	CONDUTOR AND CONDUITS FEEDER SCHEDULE
A	1/0 AWG 15KV COPPER PRIMARY FEEDERS IN 4" E.C.
B	(2) SETS OF 4-500 MCM IN (2) 4" E.C.
C	(2) SETS OF 4-500 MCM + #1/0 AWG GND IN (2) 4" E.C.
D	MICRO-Z LOW IMPEDANCE CABLE IN 1" E.C.
E	3 #3/0 AWG + #6 AWG GND IN 2" E.C.
F	3 #1/0 AWG + #6 AWG GND IN 2" E.C.
G	4 #1 AWG + #6 AWG GND IN 2" E.C.
H	3 #4 AWG + #8 AWG GND IN 1 1/4" E.C.
I	3 #2/0 AWG + #6 AWG GND IN 2" E.C.
J	4 #8 AWG + #10 AWG GND IN 3/4" E.C.
K	2 #12 AWG + #12 AWG GND IN 3/4" E.C.
L	
M	
N	
O	

H2M architects + engineers

538 Broad Hollow Road, 4th Floor East
Melville, NY 11747
631.756.8000 • www.h2m.com

CONSULTANTS:

MARK	DATE	DESCRIPTION

STATE OF NEW YORK · CHARLES J. STARKE · LICENSED PROFESSIONAL ENGINEER

"ALTERATION OF THIS DOCUMENT EXCEPT BY A LICENSED PROFESSIONAL IS ILLEGAL"

DESIGNED BY:	DRAWN BY:	CHECKED BY:	REVIEWED BY:
CJS	FI		

PROJECT No.:	DATE:	SCALE:
RDWD 1904	SEPTEMBER 2019	AS SHOWN

CLIENT

Riverhead Water District

Rehabilitation of Plant No. 4

TOWN OF RIVERHEAD · PAX ET PROSPERITAS PER PROGRESSUM · 1792

1124 Osborn Avenue
Riverhead, NY 11901

Dist: 600 Sect:101 Block:03 Lot:001

CONTRACT

CONTRACT E
ELECTRICAL UPGRADE

STATUS

FINAL BID DOCUMENT

SHEET TITLE

ELECTRICAL SINGLE LINE DIAGRAM

DRAWING No.

E4.0

SHEET No. 10 OF 16

X:\RDWD (Riverhead Water District) - 10810\RDWD1904 - Rehabilitation of Plant 4\02-BIM-CADD\Con-docs\elec\E4.0 - Electrical Single Line Diagram.dwg Last Modified: Sep 10, 2019 - 2:47pm Plotted on: Sep 10, 2019 - 3:18pm By cdelgatto

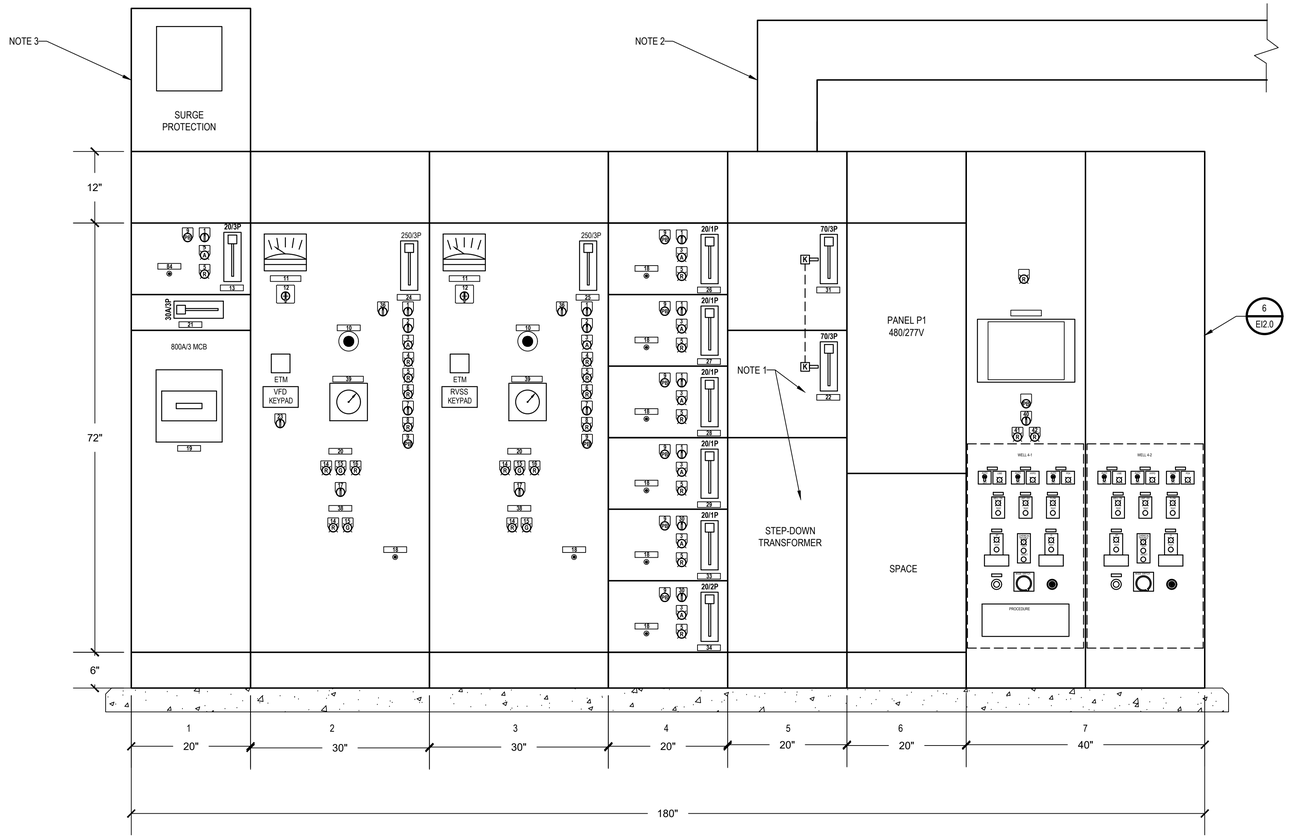

1 Electrical Equipment Elevation Plan

SCALE:1" = 1'-0"

NOTES:

1. KIRK KEYS KEYED ALIKE SO THAT ONLY ONE CIRCUIT BREAKER IS PERMITTED TO CLOSE AT ONE TIME.
2. 10"X10" WIREWAY FOR ROUTING OF NEW AND EXISTING CIRCUITS FROM NEW MCC TO NEW PANELBOARD 'P2'. COORDINATE EXACT ROUTING IN FIELD TO ACCOMMODATE EXISTING AND NEW CONSTRUCTION.
3. PROVIDE ALL MOUNTING HARDWARE AND ACCESSORIES REQUIRED TO SECURELY MOUNT EQUIPMENT INDICATED.

MCC ELEVATION SCHEDULE

ITEM	DESCRIPTION	COLOR/TYPE
1	H-O-A SWITCH	SEL3
2	NORMAL/BY-PASS SELECTOR SWITCH	SEL2
3	RUN	AMBER
4	BYPASS	RED
5	OVERLOAD	RED
6	FAULT	RED
7	HIGH PRESSURE ENABLE / DISABLE	SEL2
8	HIGH PRESS FAILURE	RED
9	RESET	PB
10	EMERGENCY STOP	PB-M
11	AMMETER	-
12	A-B-C-OFF SELECTOR	SEL4
13	AIR COMPRESSOR	-
14	"OPEN"	RED
15	"CLOSED"	GREEN
16	INCOMPLETE VALVE CYCLE	RED
17	OPEN-CLOSE-STOP-AUTO SELECTOR SWITCH	SEL4
18	OVERLOAD RESET	PB
19	MAIN CIRCUIT BREAKER	-
20	BLOW-OFF VALVE	-
21	SURGE SUPPRESSION CIRCUIT BREAKER	-
22	PANEL P2 NORMAL FEED CIRCUIT BREAKER	-
23	SPEED POT	-
24	WELL 4-2	-
25	WELL 4-1	-
26	EXHAUST FAN EF-1	-
27	EXHAUST FAN EF-2	-
28	EXHAUST FAN EF-3	-
29	EXHAUST FAN EF-4	-
30	HAND-OFF	SEL2
31	PANEL P2 EMERGENCY FEED CIRCUIT BREAKER	-
32	MODE SELECTOR	SEL4
33	LIME MIXER	-
34	DUST COLLECTOR FAN	-
35	NORMAL-OFF-EMERGENCY	SEL3
36	DIESEL-ELECTRIC	SEL2
37	SPARE CIRCUIT BREAKER	-
38	DISCHARGE CONTROL VALVE	-
39	BACKSPIN TIMER	-
40	TANK LEVEL	SEL2
41	SYSTEM PRESSURE	RED
42	SYSTEM PRESSURE TRACKING	RED

MCC DEVICE LEGEND

SEL2	SELECTOR SWITCH - TWO POSITION
SEL3	SELECTOR SWITCH - THREE POSITION
SEL4	SELECTOR SWITCH - FOUR POSITION
PB	PUSH BUTTON SWITCH - MOMENTARY
PB-M	PUSH BUTTON SWITCH - MAINTAINED

H2M architects + engineers

538 Broad Hollow Road, 4th Floor East
Melville, NY 11747
631.756.8000 • www.h2m.com

CONSULTANTS:

MARK	DATE	DESCRIPTION

STATE OF NEW YORK · CHARLES J. STARKE · LICENSED PROFESSIONAL ENGINEER · 093831

"ALTERATION OF THIS DOCUMENT EXCEPT BY A LICENSED PROFESSIONAL IS ILLEGAL"

DESIGNED BY:	DRAWN BY:	CHECKED BY:	REVIEWED BY:
CJS	FI		

PROJECT No.:	DATE:	SCALE:
RDWD 1904	SEPTEMBER 2019	AS SHOWN

CLIENT

Riverhead Water District

Rehabilitation of Plant No. 4

1124 Osborn Avenue
Riverhead, NY 11901

Dist: 600 Sect:101 Block:03 Lot:001

CONTRACT

CONTRACT E
ELECTRICAL UPGRADE

STATUS

FINAL BID DOCUMENT

SHEET TITLE

ELECTRICAL MCC ELEVATION PLAN

DRAWING No.

E5.0

SHEET No.

11 OF 16

X:\RDWD (Riverhead Water District) - 1081\RDWD1904 - Rehabilitation of Plant 4\02-BIM-CADD\Con-docs\elec\E5.0 - Electrical Equipment Elevation Plan.dwg Last Modified: Sep 11, 2019 - 10:17am Plotted on: Sep 11, 2019 - 10:18am By cdelgatto

Name

Panelboard:	P1	Voltage:	480Y/277	Phase:	3	Wire	4	A.I.C. Rating: 42,000 AMPS SYMMETRICAL
Manufacturer:	SIEMENS	Mains:	150A MCB	Mains Rating:	225 A			
Panel Type:	P2	Mounting:	WITHIN MCC	Options:		Notes:		
NEMA Type Enclosure	NEMA 1							

Load Description	Breaker Option	Trip	Poles	Circ No.	A	B	C	A	B	C	Circ No.	Poles	Trip	Breaker Option	Load Description
				1	1667 VA			1667 VA			2				
EUH-1		20 A	3	3		1667 VA			1667 VA		4	3	20 A		EUH-2
				5			1667 VA			1667 VA	6				
EUH-3		20 A	3	7	1000 VA			1000 VA			8				
				9		1000 VA			1000 VA		10	3	20 A		EUH-4
				11			1000 VA			1000 VA	12				
				13	4300 VA			0 VA			14				
TRANSFORMER	--	70 A	3	15		4100 VA			0 VA		16	3	20 A	--	SPARE
				17			3100 VA			0 VA	18				
				19	0 VA			0 VA			20				
SPARE	--	20 A	3	21		0 VA			0 VA		22	3	20 A	--	SPARE
				23			0 VA			0 VA	24				
SPARE	--	20 A	1	25	0 VA			0 VA			26	1	20 A	--	SPARE
SPARE	--	20 A	1	27		0 VA			0 VA		28	1	20 A	--	SPARE
SPARE	--	20 A	1	29			0 VA			0 VA	30	1	20 A	--	SPARE
SPARE	--	20 A	1	31	0 VA			0 VA			32	1	20 A	--	SPARE
SPARE	--	20 A	1	33		0 VA			0 VA		34	1	20 A	--	SPARE
SPARE	--	20 A	1	35			0 VA			0 VA	36	1	20 A	--	SPARE
SPARE	--	20 A	1	37	0 VA			0 VA			38	1	20 A	--	SPARE
SPARE	--	20 A	1	39		0 VA			0 VA		40	1	20 A	--	SPARE
SPARE	--	20 A	1	41			0 VA			0 VA	42	1	20 A	--	SPARE

Connected Totals:
A 9.6 kVA
B 9.4 kVA
C 8.4 kVA
Total: 27.5 kVA
Amps 33 A

(All Phases to be balanced to within 7% Actual Load Totals)

Breaker Option
AS - Powerlink AS Breaker
LO - Handle Lock-off Device
ST - Shunt Trip Type
AUX - Auxillary Contacts
PA - Handle Padlock Attchment
GFCI - Ground Fault Circuit Interrupter
HACR - Heating, A/C & Refrigeration
SF - Subfeed
TC - Time Clock Control

Name

Panelboard:	P2	Voltage:	208Y/120	Phase:	3	Wire	4	A.I.C. Rating: 10,000 AMPS SYMMETRICAL
Manufacturer:	SIEMENS	Mains:	150A MCB	Mains Rating:	225 A			
Panel Type:	P2	Mounting:	SURFACE	Options:		Notes:		
NEMA Type Enclosure	NEMA 1							

Load Description	Breaker Option	Trip	Poles	Circ No.	A	B	C	A	B	C	Circ No.	Poles	Trip	Breaker Option	Load Description
LIME PUMP 1		20 A	1	1	864 VA			864 VA			2	1	20 A		LIME PUMP 2
LIME MIXER		20 A	1	3		1176 VA			790 VA		4	2	20 A		DUST COLLECTOR FAN
EF-1		20 A	1	5			360 VA			790 VA	6				
EF-3		20 A	1	7	528 VA			360 VA			8	1	20 A		EF-2
EXISTING EF-4		20 A	1	9		1176 VA			1000 VA		10	1	20 A		CP-1 CIRCUIT 1
CP-1 CIRCUIT 2		20 A	1	11			1000 VA			900 VA	12	1	20 A	--	LIGHTING LOAD
MISC. ELECTRICAL LOAD	--	20 A	1	13	1700 VA			500 VA			14	1	20 A		CHART RECORDERS
CHEMICAL TREATMENT PANEL		20 A	1	15		500 VA			0 VA		16	1	20 A	--	SPARE
SPARE	--	20 A	1	17			0 VA			0 VA	18	1	20 A	--	SPARE
SPARE	--	20 A	1	19	0 VA			0 VA			20	1	20 A	--	SPARE
SPARE	--	20 A	1	21		0 VA			0 VA		22	1	20 A	--	SPARE
SPARE	--	20 A	1	23			0 VA			0 VA	24	1	20 A	--	SPARE
SPARE	--	20 A	1	25	0 VA			0 VA			26	1	20 A	--	SPARE
SPARE	--	20 A	1	27		0 VA			0 VA		28	1	20 A	--	SPARE
SPARE	--	20 A	1	29			0 VA			0 VA	30	1	20 A	--	SPARE
SPARE	--	20 A	1	31	0 VA			0 VA			32	1	20 A	--	SPARE
SPARE	--	20 A	1	33		0 VA			0 VA		34	1	20 A	--	SPARE
SPARE	--	20 A	1	35			0 VA			0 VA	36	1	20 A	--	SPARE
SPARE	--	20 A	1	37	0 VA			0 VA			38	1	20 A	--	SPARE
SPARE	--	20 A	1	39		0 VA			0 VA		40	1	20 A	--	SPARE
SPARE	--	20 A	1	41			0 VA			0 VA	42	1	20 A	--	SPARE

Connected Totals:
A 4.8 kVA
B 4.6 kVA
C 3.1 kVA
Total: 11.5 kVA
Amps 32 A

(All Phases to be balanced to within 7% Actual Load Totals)

Breaker Option
AS - Powerlink AS Breaker
LO - Handle Lock-off Device
ST - Shunt Trip Type
AUX - Auxillary Contacts
PA - Handle Padlock Attchment
GFCI - Ground Fault Circuit Interrupter
HACR - Heating, A/C & Refrigeration
SF - Subfeed
TC - Time Clock Control

TRANSFORMER SCHEDULE

TRANSFORMER IDENTIFICATION	SIZE	PRIMARY VOLTAGE/ PHASE	SECONDARY VOLTAGE / PHASE / WIRE	TYPE	ENCLOSURE	MOUNTING LOCATION
T1	45 kVA	480V, 3Φ	120/208V, 3Φ, 4W	DRY	OPEN	MCC SECTION 5

ELECTRIC HEATER SCHEDULE

EQUIPMENT NO.	LOCATION	TYPE	PERFORMANCE/CONSTRUCTION REQUIREMENTS						BASIS OF DESIGN INFORMATION				REMARKS
			FAN DATA			TOTAL CAPACITY (MBH)	ELECTRIC HEATING DATA		MANUFACTURER	MODEL NO.	NOMINAL DIMENSIONS H x W x D (IN.)	NOMINAL OPERATING WEIGHT (LBS)	
			AIRFLOW (CFM)	HP	THROW (FT.)		VOLTAGE/PHASE	kW					
EUH-1	LIME ROOM	ELECTRIC UNIT HEATER	350	1/100	12	17	480 / 3Φ	5	Q MARK	MUH05-41	16 x 14 x 7.5	27	1-3
EUH-2	WELL 4-1 ROOM	ELECTRIC UNIT HEATER	350	1/100	12	17	480 / 3Φ	5	Q MARK	MUH05-41	16 x 14 x 7.5	27	1-3
EUH-3	WELL 4-2 ROOM	ELECTRIC UNIT HEATER	350	1/100	12	10.2	480 / 3Φ	3	Q MARK	MUH03-41	16 x 14 x 7.5	27	1-3
EUH-4	WELL 4-2 ROOM	ELECTRIC UNIT HEATER	350	1/100	12	10.2	480 / 3Φ	3	Q MARK	MUH03-41	16 x 14 x 7.5	27	1-3

1. DISCONNECT SWITCH
2. 24V CONTROLS TRANSFORMER
3. WALL SWIVEL MOUNTING BRACKET

H2M architects + engineers
538 Broad Hollow Road, 4th Floor East
Melville, NY 11747
631.756.8000 • www.h2m.com

CONSULTANTS:

MARK	DATE	DESCRIPTION

STATE OF NEW YORK · CHARLES J. STANICZ · 093831 · LICENSED PROFESSIONAL ENGINEER

ALTERATION OF THIS DOCUMENT EXCEPT BY A LICENSED PROFESSIONAL IS ILLEGAL

DESIGNED BY:	DRAWN BY:	CHECKED BY:	REVIEWED BY:
CJS	FI		

PROJECT No:	DATE:	SCALE:
RDWD1904	SEPTEMBER 2019	AS SHOWN

CLIENT
Riverhead Water District

Rehabilitation of Plant No. 4

1124 Osborn Avenue
Riverhead, NY 11901

Dist:600 Sect:101 Block:03 Lot:001

CONTRACT
CONTRACT E
ELECTRICAL UPGRADES

STATUS
FINAL BID DOCUMENT

SHEET TITLE
ELECTRICAL SCHEDULES

DRAWING No. E6.0

SHEET No. 12 OF 16

C:\Users\cdelgatto\Documents\RDWD1904_Central19_M_v2.0_cdelgatto.rvt

9/10/2019 3:16:36 PM

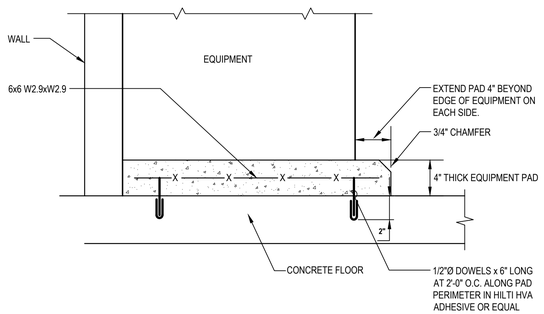

1 **Concrete Equipment Pad Elevation View**
SCALE:NTS

NOTE:

1. CONTRACTOR SHALL PRIME AND PAINT CONCRETE PAD BEFORE INSTALLING SWITCHBOARD.

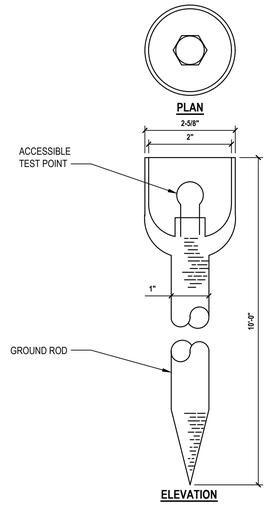

2 **Accessible Ground Rod**
SCALE:NTS

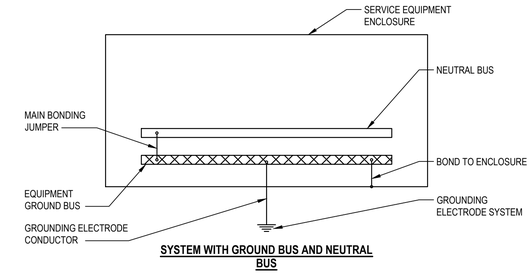

3 **Basic System Grounding**
SCALE:NTS

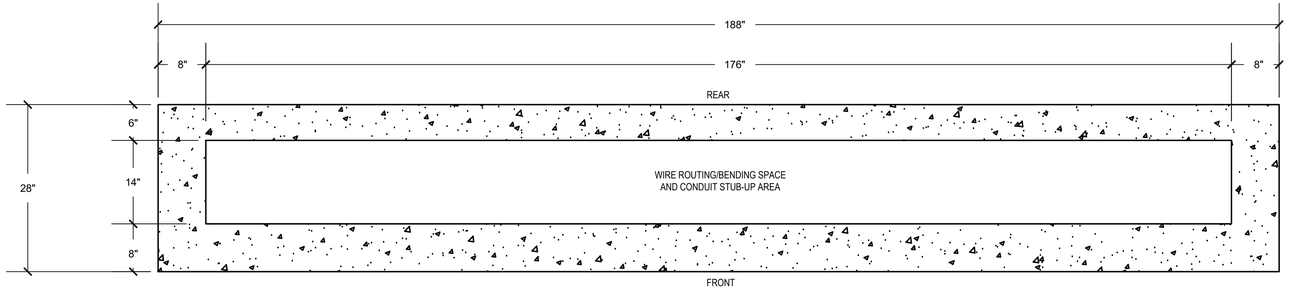

4 **Concrete Equipment Pad Plan View**
SCALE:NTS

NOTE:

1. CONTRACTOR SHALL PRIME AND PAINT CONCRETE PAD BEFORE INSTALLING SWITCHBOARD.

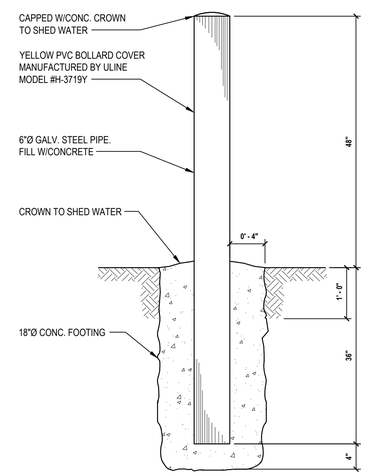

5 **Bollard Detail**
SCALE:1/2"=1'-0"

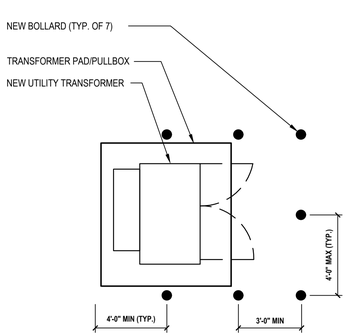

6 **Typical Transformer Bollard Configuration Detail**
SCALE:NTS

H2M architects + engineers
538 Broad Hollow Road, 4th Floor East
Melville, NY 11747
631.756.8000 • www.h2m.com

CONSULTANTS:

MARK	DATE	DESCRIPTION

"ALTERATION OF THIS DOCUMENT EXCEPT BY A LICENSED PROFESSIONAL IS ILLEGAL"

DESIGNED BY:	DRAWN BY:	CHECKED BY:	REVIEWED BY:
CJS	FI		

PROJECT No.:	DATE:	SCALE:
RDWD 1904	SEPTEMBER 2019	AS SHOWN

CLIENT
Riverhead Water District

Rehabilitation of Plant No. 4

1124 Osborn Avenue
Riverhead, NY 11901

Dist: 600 Sect:101 Block:03 Lot:001

CONTRACT
CONTRACT E
ELECTRICAL UPGRADE

STATUS
FINAL BID DOCUMENT

SHEET TITLE
ELECTRICAL DETAILS

DRAWING No.
E7.0

SHEET No.
13 OF 16

X:\RDWD (Riverhead Water District) - 10810\RDWD1904 - Rehabilitation of Plant 4\02-BIM-CADD\Con-docs\elec\E7.0 - Electrical Details.dwg Last Modified: Sep 10, 2019 - 2:49pm Plotted on: Sep 10, 2019 - 3:17pm By cdelgatto

INSTRUMENTATION AND CONTROL LEGEND

SYMBOL	DESCRIPTION	COMMENTS
IL X	INDICATING LIGHT - LETTER DENOTES LENS COLOR: W-WHITE; G-GREEN; A-AMBER; R-RED; B-BLUE; C-CLEAR	
AIT	ANALYSIS INDICATING TRANSMITTER	
FIT	FLOW INDICATING TRANSMITTER	
FS	FLOW SWITCH	
H	HORN	
LIT	LEVEL INDICATING TRANSMITTER	
LS	LEVEL SWITCH	
LE	LEVEL ELECTRODES	
ZS	LIMIT SWITCH	
PS	PRESSURE SWITCH	
PIT	PRESSURE SWITCH INDICATOR	
SV	SOLENOID VALVE	
LNR	LINE REACTOR	
SL	STROBE LIGHT	
TS	TEMPERATURE SWITCH	
TIT	TEMPERATURE INDICATING TRANSMITTER	
T	THERMOSTAT	
DP	DIFFERENTIAL PREASSURE SWITCH	
	CONTACT - NORMALLY OPEN	
	CONTACT - NORMALLY CLOSED	
	CONDUCTOR CROSSOVER	
	CONNECTION / TERMINATION	
	REMOTE CONTACT	
HWL	HIGH WATER LEVEL SWITCH	
	REMOTE TERMINATION	
ETM	ELAPSED TIME METER	
	GROUND	
PB	PUSH BUTTON	
TD	TIME DELAY	
M	MOTOR	
	SWITCH - TOGGLE	
	SOLENOID VALVE COIL	
	MOMENTARY CONTACT PUSH BUTTON - NORMALLY OPEN	
	MOMENTARY CONTACT PUSH BUTTON - NORMALLY CLOSED	
	SWITCH - TEMPERATURE - NORMALLY OPEN	
	SWITCH - TEMPERATURE - NORMALLY CLOSED	
	SWITCH - FLOW - NORMALLY OPEN	
	SWITCH - FLOW - NORMALLY CLOSED	
	SWITCH - LIMIT - NORMALLY OPEN	
	SWITCH - LIMIT - NORMALLY CLOSED	
	CONTACT - "ON" TIME DELAY - NORMALLY OPEN	
	CONTACT - "ON" TIME DELAY - NORMALLY CLOSED	
	CONTACT - "OFF" TIME DELAY - NORMALLY OPEN	
	CONTACT - "OFF" TIME DELAY - NORMALLY CLOSED	
	SWITCH - LIQUID LEVEL- NORMALLY OPEN	
	SWITCH - LIQUID LEVEL - NORMALLY CLOSED	
	SWITCH - PRESSURE- NORMALLY OPEN	
	SWITCH - PRESSURE - NORMALLY CLOSED	

SYMBOL	DESCRIPTION	COMMENTS
TC	TIME CLOCK	
	2 #12 AWG + #12 AWG GND IN 3/4" E.C. CONCEALED IN WALL OR CEILING	
LP1-35	DEDICATED HOME RUN TO PANEL LP1 FOR CIRCUIT No. 35 ONLY. 2 #12 AWG + #12 AWG GND IN 3/4" E.C. CONCEALED IN WALL OR CEILING	
	DUPLEX RECEPTACLE: 120V, 20A. COORDINATE MOUNTING HEIGHT WITH MECHANICAL CONTRACTOR TO CLEAR BASEBOARDS.	
TL	TWISTED LOCK RECEPTACLE: 125V, 20A, 3 WIRE; UNLESS OTHERWISE NOTED.	
S1	MAGNETIC STARTER "S1"; SEE STARTER SCHEDULE	
DS1	DISCONNECTION SWITCH "DS1"; SEE DISCONNECT SWITCH SCHEDULE.	
J	JUNCTION BOX	
J 4X	NEMA 4X STAINLESS STEEL JUNCTION BOX WITH GASKET COVER.	
T T1	TRANSFORMER "T1"; SEE TRANSFORMER SCHEDULE.	
P1	ELECTRICAL PANEL "P1", SURFACE MOUNT; SEE PANEL SCHEDULE.	
P1	ELECTRICAL PANEL "P1", RECESSED; SEE PANEL SCHEDULE.	
	CONDUIT GOING UP.	
	CONDUIT GOING DOWN.	
	PULLBOX	
100AF 100AT	CIRCUIT BREAKER WITH TRIP AND POLES AS NOTED; 100 AMP FRAME, 100 AMP TRIP.	
SHP	MOTOR, NUMBER INDICATES HORSEPOWER	

ABBREVIATION	DESCRIPTION
AFF	ABOVE FINISH FLOOR
AFC	ABOVE FINISH CEILING
AFG	ABOVE FINISH GRADE
AMP, A	AMPERE
ATS	AUTOMATIC TRANSFER SWITCH; SEE TRANSFER SWITCH SCHEDULE
AWG	AMERICAN WIRE GUAGE
BFC	BELOW FINISHED CEILING
CL	CENTERLINE
CT	COUNTERTOP
EC	ELECTRICAL CONDUIT
GFCI	GROUND FAULT CIRCUIT INTERRUPTER
GFI	GROUND FAULT INDICATOR
PSEG	PUBLIC SERVICE ELECTRIC AND GAS COMPANY (LOCAL ELECTRIC UTILITY)
MCB	MAIN CIRCUIT BREAKER
MLO	MAIN LUGS ONLY
NTS	NOT TO SCALE
UON	UNLESS OTHERWISE NOTED
UC	UNDERCOUNTER
V	VOLTS
VAC	VOLTS ALTERNATING CURRENT
VDC	VOLT DIRECT CURRENT
X-FMR	TRANSFORMER
WP	WEATHERPROOF

H2M architects + engineers

538 Broad Hollow Road, 4th Floor East
Melville, NY 11747
631.756.8000 • www.h2m.com

CONSULTANTS:

MARK	DATE	DESCRIPTION

STATE OF NEW YORK · CHARLES J. STANGE · 093831 · LICENSED PROFESSIONAL ENGINEER

"ALTERATION OF THIS DOCUMENT EXCEPT BY A LICENSED PROFESSIONAL IS ILLEGAL"

DESIGNED BY:	DRAWN BY:	CHECKED BY:	REVIEWED BY:
CJS	FI		

PROJECT No:	DATE:	SCALE:
RDWD1904	SEPTEMBER 2019	AS SHOWN

CLIENT

Riverhead Water District

Rehabilitation of Plant No. 4

1124 Osborn Avenue
Riverhead, NY 11901

Dist:600 Sect:101 Block:03 Lot:001

CONTRACT

CONTRACT E ELECTRICAL UPGRADES

STATUS

FINAL BID DOCUMENT

SHEET TITLE

INSTRUMENTATION AND CONTROL LEGENDS

DRAWING No.

EI0.0

SHEET No. 14 OF 16

C:\Users\cdelgatto\Documents\RDWD1904_Central19_M_v2.0_cdelgatto.rvt

9/10/2019 3:16:36 PM

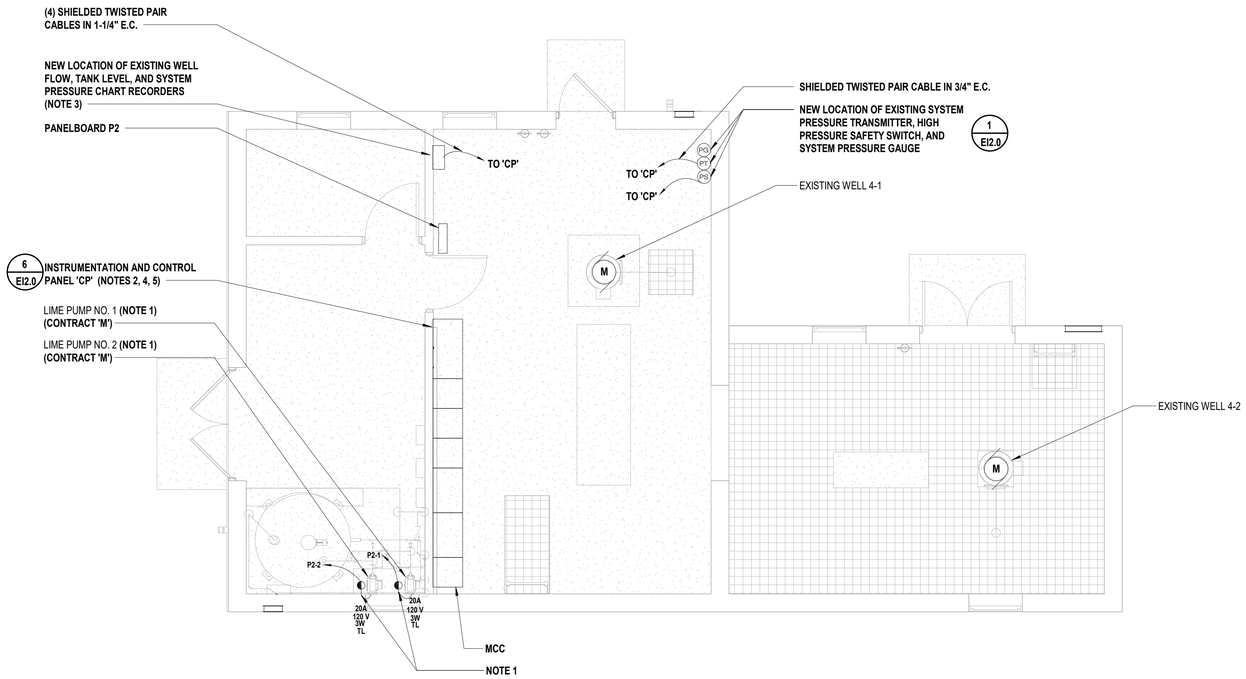

1 ELECTRICAL CONTROL PLAN

SCALE: 1/4" = 1'-0"

INSTRUMENTATION GENERAL NOTES:

G1. ALL EXPOSED CONDUIT SHALL BE RUN PARALLEL TO BUILDING WALLS AND BEAMS EXCEPT WHERE OTHERWISE SHOWN ON PLANS.

G2. EXPOSED CONDUIT SHALL BE SUPPORTED FROM WALLS AND, OR CEILING BY APPROVED HANGERS OF ANGLE OR CHANNEL CONSTRICTION.

G3. EXPANSION FITTINGS OF THE APPROVED TYPE SHALL BE FURNISHED AND INSTALLED WHERE CONDUITS EXPOSED OR CONCEALED PASS THROUGH STRUCTURAL JOINTS.

G4. EXACT CONDUIT STUB-UP LOCATIONS ARE TO BE DETERMINED BY THE ELECTRICAL CONTRACTOR BASED ON THE CERTIFIED MANUFACTURER'S DRAWING OF THE RESPECTIVE EQUIPMENT. CONDUITS FOR THE EQUIPMENT SHALL BE INSTALLED BASED ON THE REQUIREMENTS OF THE ACTUAL EQUIPMENT FURNISHED.

G5. ALL 3 PHASE MOTOR STARTERS SHALL BE NEMA SIZE 1 EXCEPT AS NOTED.

G6. ALL PANELBOARD CIRCUIT BREAKERS SHALL BE RATED AT 20AMP UNLESS OTHERWISE NOTED. ALL UNUSED PANEL CIRCUITS SHALL BE PROVIDED WITH 20AMP- POLE SPARE.

G7. ALL SINGLE PHASE POWER AND LIGHTING CONDUITS SHALL BE 3/4" WITH 3 #12 AWG (1 HOT, 1 NEUTRAL, 1 GROUND) UNLESS OTHERWISE NOTED.

G8. FOR EXTERIOR WORK AND ENMA 4X RATED AREAS, ALL CONDUIT, SUPPORTS, FITTINGS, ETC. SHALL HAVE 40 MIL PVC COATED EXTERIOR, 2 MIL URETHANE COATED INTERIOR, AND ALL HARDWARE AND JUNCTION BOXES SHALL BE STAINLESS STEEL. NEMA 4x RATED AREAS SHALL INCLUDE BUT NOT BE LIMITED TO ALL EXTERIOR AREAS AND ALL CORROSIVE AREAS.

G9. ALL ELECTRICAL WORK SHALL CONFORM TO THE LATEST EDITION OF THE NATIONAL ELECTRIC CODE, AS WELL AS THE OTHER APPLICABLE FEDERAL, STATE AND LOCAL LAWS AND ORDINANCES.

G10. ALL EQUIPMENT IN ELECTRICAL ROOMS SHALL BE NEMA TYPE 12 UNLESS OTHERWISE NOTED.

G11. ALL COMPONENTS OF THE ELECTRICAL SYSTEM SHALL BE PROPERLY GROUNDED IN ACCORDANCE WITH NEC AND MANUFACTURER'S RECOMMENDATION.

G12. CONTRACTOR SHALL FURNISH AND INSTALL ALL ELECTRICAL EQUIPMENT REQUIRED TO PROVIDE A COMPLETED SYSTEM IN WORKING ORDER.

G13. CONTRACTOR SHALL FURNISH AND INSTALL ALL ELECTRIC WIRE AND CABLE FOR ALL ELECTRICAL EQUIPMENT AND ALL INTERCONNECTING WIRES FOR COMPONENTS PROVIDED UNDER ALL SECTIONS OF THIS CONTRACT. ALL WIRING AND CABLING FOR THIS PROJECT SHALL BE COPPER UNLESS OTHERWISE NOTED.

G14. ALL SWITCHES, CIRCUIT BREAKERS, MCC CUBICLES, AND CONTROL PANELS SHALL BE IDENTIFIED VIA NAMEPLATE.

G15. REFER TO HVAC DRAWINGS FOR HVAC EQUIPMENT LOCATIONS.

G16. CONTRACTOR SHALL EXERCISE AND TEST ALL CIRCUIT BREAKERS ASSOCIATED WITH EXISTING SWITCHGEAR AND MCC'S TO ENSURE PROPER OPERATION. ALL TESTS MUST BE PREFORMED PRIOR TO ANY CONSTRUCTION IN CONNECTION WITH THIS PROJECT IN THE PRESENCE OF AN ENGINEER.

G17. THE SYMBOLS AND ABBREVIATIONS LISTED REPRESENT A COMPREHENSIVE STANDARD GUIDE INTENDED FOR GENERAL USE ON THIS PROJECT. THEREFORE NOT ALL OF THE SYMBOLS AND ABBREVIATIONS CONTAINED IN THIS LIST ARE NECESSARILY USED FOR THIS PARTICULAR PROJECT.

G18. CROSS OFF LINE INDICATES DEMOLITION AND REMOVAL UNLESS OTHERWISE NOTED.

G19. WHEREVER THE INSTALLATION OF ELECTRICAL EQUIPMENT AS SHOWN ON THE DRAWINGS IS IMPRACTICAL DUE TO LOCAL INTERFERENCE OR OTHER REASONS THE CONTRACTOR SHALL INSTALL THE EQUIPMENT AT NEW LOCATIONS AS DIRECTED BY THE ENGINEER, AT NO EXTRA COST.

G20. ALL EQUIPMENT SCHEDULED TO BE REFERENCED TO AS A PART OF THIS PROJECT, CONTRACTOR SHALL TEST OPERATION PRIOR TO DE-ENERGIZATION/RE-ENERGIZATION IN PRESENCE OF ENGINEER.

NOTES:

1. PROVIDE AND INSTALL S.O. CORD WITH MATCHING PLUG END. CORD AND PLUG END SHALL BE SIZED IN ACCORDANCE WITH NEC.
2. RETERMINATE ALL EXISTING PLC I/O WIRING TO NEW PLC IN NEW CP. REFER TO DRAWING E2.0 AND SPECIFICATION 265011 FOR ADDITIONAL DETAIL.
3. CONTRACTOR SHALL REROUTE EXISTING WELL 4-1 FLOW, WELL 4-2 FLOW, TANK LEVEL, AND SYSTEM PRESSURE CHART RECORDER INPUT SIGNALS FROM EXISTING TERMINATION LOCATION IN EXISTING MCC TO NEW LOCATION OF ASSOCIATED WALL MOUNTED CHART RECORDER.
4. REINSTALL EXISTING TELEMETRY EQUIPMENT (MODEM, VPN, ETC.) WITHIN NEW CONTROL PANEL TO ESTABLISH COMMUNICATION BETWEEN NEW CONTROL PANEL AND EXISTING ADMINISTRATION/SCADA SYSTEM.
5. ALL STATUS OF EXISTING ADMINISTRATION OFFICE PLANT NO. 4 PLC I/O POINTS LISTED IN SPECIFICATION SECTION 265010 SHALL BE MAINTAINED IN ORDER TO OPERATE AS CURRENTLY CONFIGURED. CONTRACTOR SHALL MODIFY EXISTING ADMINISTRATION OFFICE PLANT NO. 4 PLC PROGRAM AS REQUIRED TO COMMUNICATE APPROPRIATE INFORMATION FROM NEW PLC IN PLANT NO. 4 CP-1 TO EXISTING PLC IN ADMINISTRATION BUILDING, AND TO EXISTING SCADA PC IN ADMINISTRATION BUILDING. REFER TO SPECIFICATION 265011 - PROGRAMMABLE LOGIC CONTROLLER APPENDIX A - PLC INPUTS/OUTPUTS FOR ADDITIONAL DETAIL.

H2M architects + engineers

538 Broad Hollow Road, 4th Floor East
Melville, NY 11747
631.756.8000 • www.h2m.com

CONSULTANTS:

MARK	DATE	DESCRIPTION

STATE OF NEW YORK · CHARLES J. STANICE · 093831 · LICENSED PROFESSIONAL ENGINEER

"ALTERATION OF THIS DOCUMENT EXCEPT BY A LICENSED PROFESSIONAL IS ILLEGAL"

DESIGNED BY:	DRAWN BY:	CHECKED BY:	REVIEWED BY:
CJS	FI		

PROJECT No:	DATE:	SCALE:
RDWD1904	SEPTEMBER 2019	AS SHOWN

CLIENT

Riverhead Water District

Rehabilitation of Plant No. 4

TOWN OF RIVERHEAD · 1792 · FAX ET PROSPERITAS · VIR PROGRESSUS

1124 Osborn Avenue
Riverhead, NY 11901

Dist:600 Sect:101 Block:03 Lot:001

CONTRACT

CONTRACT E ELECTRICAL UPGRADES

STATUS

FINAL BID DOCUMENT

SHEET TITLE

INSTRUMENTATION AND CONTROL PLAN

DRAWING No. **EI1.0**

SHEET No. 15 OF 16

C:\Users\cdelgatto\Documents\RDWD1904_Central19_M_v2.0_cdelgatto.rvt

9/11/2019 12:31:48 PM

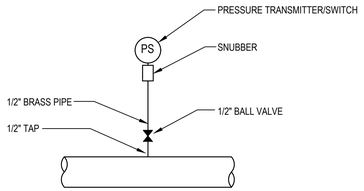

1 Pressure Transmitter/Switch Detail
SCALE:NTS

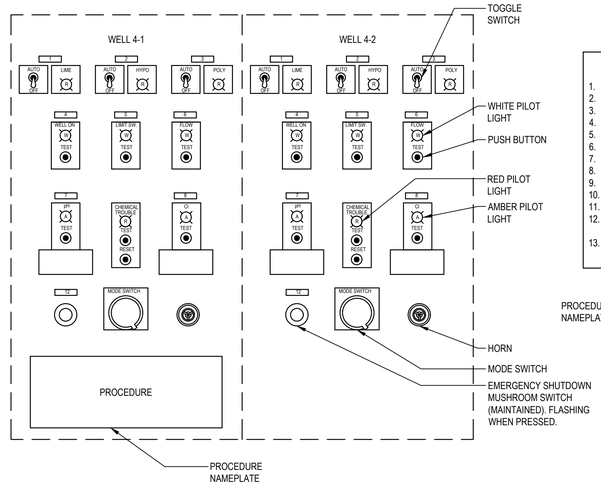

2 Chemical Safety Treatment Panel "CTP"
SCALE:NTS

PROCEDURE

1. TURN MODE SWITCH TO "WELD-LAMP TEST". (ALL SAFETY & ALL CHEM. LAMPS SHOULD LIGHT.)
2. DEPRESS SAFETY #1 PUSHBUTTON. (ALL CHEM. LAMPS & SAFETY #1 LAMP SHOULD BE OFF.)
3. DEPRESS SAFETY #2 PUSHBUTTON. (ALL CHEM. LAMPS & SAFETY #2 LAMP SHOULD BE OFF.)
4. DEPRESS SAFETY #3 PUSHBUTTON. (ALL CHEM. LAMPS & SAFETY #3 LAMP SHOULD BE OFF.)
5. DEPRESS SAFETY #4 PUSHBUTTON. (CHEM. LAMP #1 & SAFETY #4 LAMP SHOULD BE OFF.)
6. DEPRESS SAFETY #5 PUSHBUTTON. (CHEM. LAMP #2 & SAFETY #5 LAMP SHOULD BE OFF.)
7. TURN MODE SWITCH TO "DEVICE". (ALL LAMPS SHOULD BE OFF.)
8. MANUALLY CLOSE SAFETY DEVICE #1. (SAFETY #1 LAMP AND HORN SHOULD BE ON.)
9. MANUALLY CLOSE SAFETY DEVICE #2. (SAFETY #2 LAMP AND HORN SHOULD BE ON.)
10. MANUALLY CLOSE SAFETY DEVICE #3. (SAFETY #3 LAMP AND HORN SHOULD BE ON.)
11. TURN MODE SWITCH TO "NORM" (NORMAL). START WELL AND ALLOW TO PUMP TO SYSTEM.
12. DEPRESS AND HOLD CHEMICAL TROUBLE PUSHBUTTON. ("CHEM TROUBLE" LAMP SHOULD LIGHT AND CHEM PUMPS SHOULD STOP AFTER TIME DELAY.)
13. DEPRESS RESET PUSHBUTTON. ("CHEM TROUBLE" LAMP SHOULD BE OFF AND CHEM. PUMPS SHOULD RUN.)

PROCEDURE NAMEPLATE

3 Chemical Safety Treatment Panel Procedure
SCALE:NTS

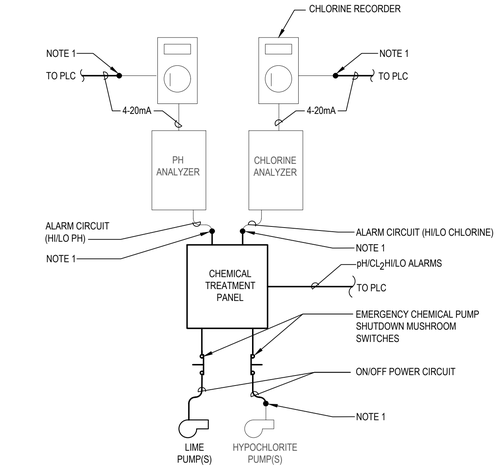

4 pH/Chlorine Analyzer Instrumentation Control Diagram
SCALE:NTS

NOTE:

1. EXTEND EXISTING WIRING AND CONDUIT AS REQUIRED.

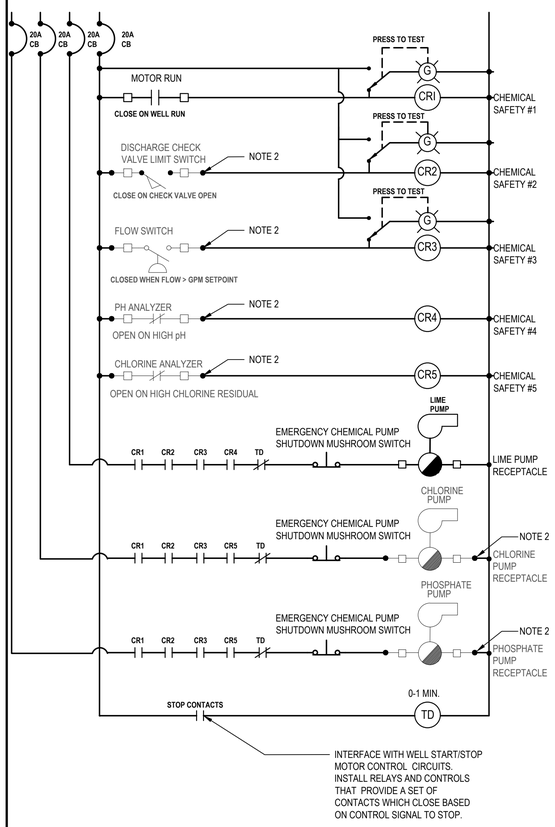

5 Chemical Treatment Safety Control Diagram (Typ.)
SCALE:NTS

NOTE:

1. LOGIC SHOWN IS FOR INTERLOCKING OF CHEMICAL TREATMENT SAFETIES. REFER TO SPECIFICATIONS FOR ADDITIONAL CONTROLS NOT SHOWN.
2. EXTEND EXISTING WIRING AND CONDUIT AS REQUIRED TO TERMINATE AT NEW CHEMICAL TREATMENT PANEL.

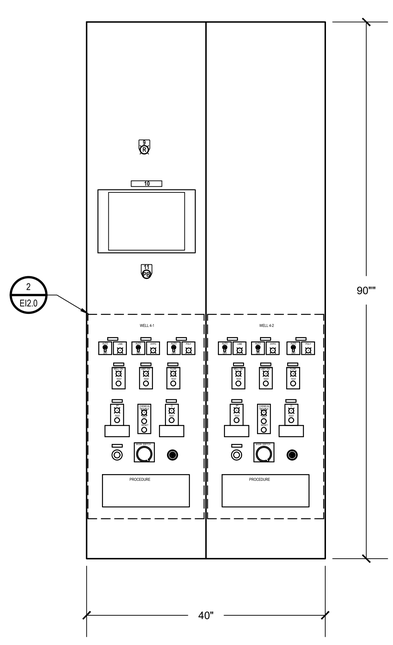

6 Control Panel "CP-1" Elevation
SCALE:NTS

CONTROL PANEL ELEVATION SCHEDULE

ITEM	DESCRIPTION	COLOR/TYPE
1	LIME	-
2	HYPO	-
3	POLYPHOSPHATE	-
4	STARTER AUX.	-
5	DISCH. VALVE LIMIT SWITCH	-
6	D/P SWITCH	-
7	pH	-
8	CHLORINE RESIDUAL	-
9	GENERAL ALARM	-
10	GRAPHICAL USER INTERFACE	-
11	RESET	PB
12	EM. CHEMICAL PUMP SHUTDOWN MUSHROOM SWITCH	PB-M

CONTROL PANEL DEVICE LEGEND

PB	PUSH BUTTON SWITCH - MOMENTARY
PB-M	PUSH BUTTON SWITCH - MAINTAINED

H2M architects + engineers
538 Broad Hollow Road, 4th Floor East
Melville, NY 11747
631.756.8000 • www.h2m.com

CONSULTANTS:

MARK	DATE	DESCRIPTION

STATE OF NEW YORK · CHARLES J. STANGE · LICENSED PROFESSIONAL ENGINEER · 090847

"ALTERATION OF THIS DOCUMENT EXCEPT BY A LICENSED PROFESSIONAL IS ILLEGAL"

DESIGNED BY:	DRAWN BY:	CHECKED BY:	REVIEWED BY:
MJS	MJS		
PROJECT No.: RDWD 1904	DATE: SEPTEMBER 2019	SCALE: AS SHOWN	

CLIENT
Riverhead Water District

Rehabilitation of Plant No. 4

1124 Osborn Avenue
Riverhead, NY 11901

Dist: 600 Sect:101 Block:03 Lot:001

CONTRACT
CONTRACT E
ELECTRICAL UPGRADE

STATUS
FINAL BID DOCUMENT

SHEET TITLE
INSTRUMENTATION AND CONTROL DETAILS AND DIAGRAMS

DRAWING No.
EI2.0

SHEET No. 16 OF 16

X:\RDWD (Riverhead Water District) - 1081\R\DWG\1904 - Rehabilitation of Plant 4\02\BIM-CADD\Con-docs\rev-E\EI2.0 - Electrical Details.dwg Last Modified: Sep 11, 2019 - 11:25am Plotted on Sep 11, 2019 - 11:25am By cstangelo